This is a digital copy of a book that was preserved for generations on library shelves before it was carefully scanned by Google as part of a project to make the world's books discoverable online.

It has survived long enough for the copyright to expire and the book to enter the public domain. A public domain book is one that was never subject to copyright or whose legal copyright term has expired. Whether a book is in the public domain may vary country to country. Public domain books are our gateways to the past, representing a wealth of history, culture and knowledge that's often difficult to discover.

Marks, notations and other marginalia present in the original volume will appear in this file - a reminder of this book's long journey from the publisher to a library and finally to you.

Usage guidelines

Google is proud to partner with libraries to digitize public domain materials and make them widely accessible. Public domain books belong to the public and we are merely their custodians. Nevertheless, this work is expensive, so in order to keep providing this resource, we have taken steps to prevent abuse by commercial parties, including placing technical restrictions on automated querying.

We also ask that you:

+ *Make non-commercial use of the files* We designed Google Book Search for use by individuals, and we request that you use these files for personal, non-commercial purposes.
+ *Refrain from automated querying* Do not send automated queries of any sort to Google's system: If you are conducting research on machine translation, optical character recognition or other areas where access to a large amount of text is helpful, please contact us. We encourage the use of public domain materials for these purposes and may be able to help.
+ *Maintain attribution* The Google "watermark" you see on each file is essential for informing people about this project and helping them find additional materials through Google Book Search. Please do not remove it.
+ *Keep it legal* Whatever your use, remember that you are responsible for ensuring that what you are doing is legal. Do not assume that just because we believe a book is in the public domain for users in the United States, that the work is also in the public domain for users in other countries. Whether a book is still in copyright varies from country to country, and we can't offer guidance on whether any specific use of any specific book is allowed. Please do not assume that a book's appearance in Google Book Search means it can be used in any manner anywhere in the world. Copyright infringement liability can be quite severe.

About Google Book Search

Google's mission is to organize the world's information and to make it universally accessible and useful. Google Book Search helps readers discover the world's books while helping authors and publishers reach new audiences. You can search through the full text of this book on the web at `http://books.google.com/`

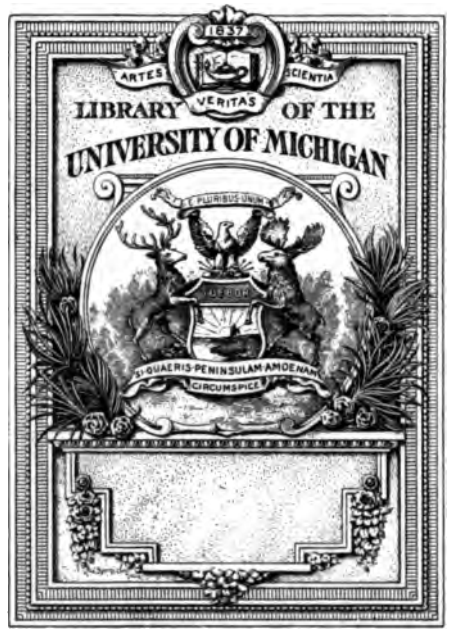

THE GIFT OF

Supt. of Documents.

DEPARTMENT OF THE INTERIOR
UNITED STATES GEOLOGICAL SURVEY
GEORGE OTIS SMITH, DIRECTOR

BULLETINS

Nos. 329-330

WASHINGTON
GOVERNMENT PRINTING OFFICE
1908

CONTENTS

Geological Survey, bulletin 329; Structural-materials testing laboratories, St. Louis. same, 330; Data of geochemistry.

207295

Bulletin No. 329

DEPARTMENT OF THE INTERIOR
UNITED STATES GEOLOGICAL SURVEY
GEORGE OTIS SMITH, DIRECTOR

ORGANIZATION, EQUIPMENT, AND OPERATION

OF THE

STRUCTURAL-MATERIALS TESTING LABORATORIES AT ST. LOUIS, MO.

BY

RICHARD L. HUMPHREY

WITH PREFACE BY

JOSEPH A. HOLMES
IN CHARGE OF TECHNOLOGIC BRANCH

WASHINGTON
GOVERNMENT PRINTING OFFICE
1908

CONTENTS.

	Page.
Preface, by Joseph A. Holmes	VII
Introduction	1
Historical sketch	1
National advisory board on fuels and structural materials	2
Organization	2
Personnel	3
Joint committee on concrete and reinforced concrete	5
Organization	5
Personnel	5
Cooperation between national advisory board and joint committee	7
Funds	8
Structural-materials division	8
Organization	8
Buildings	9
Equipment	10
Acknowledgment of donations	13
Programme for investigation of concrete and reinforced concrete	16
Origin of the plan	16
Details of the plan	16
Work at technological institutions	19
Sequence of tests	20
Summary	20
Constituent-materials section	21
Outline of investigations	21
Physical tests of cement	22
Strength tests of neat cement and Ottawa sand mortar	22
Sand, stone, gravel, and other aggregates	24
Physical tests made	24
Percentage of voids	24
Percentage of moisture	26
Weight per cubic foot	26
Percentage of absorption	26
Specific gravity	26
Method used with large material	26
Method used with material that passes ¼-inch screen	27
Percentage of silt	28
Granulometric analysis	29
Tests of mortar	29
Description	29
Strength tests	30
Density tests	30
Tests of concrete	31
Description	31
Strength tests	32
Modulus of elasticity in compression	33
Density tests	33
Tests of stone	36

Page.
Beam section 37
Outline of investigations 37
Nature of the work 37
Mixing 48
Molding 50
Storage 52
Beam testing 53
Apparatus 53
Plain-concrete beams 54
Reinforced beams 55
Computations 57
Tests of cylinders and cubes 63
Bond test pieces 64
Tests of steel 65
Shear and tension section 66
Outline of investigations 66
Mixing, molding, and storage 68
Computations 68
Building-block section 68
Outline of investigations 68
Programme of investigations 69
Mixing and molding 71
Storage 72
Strength tests 72
Fire tests 73
Permeability section 76
Chemical section 79
Outline of investigations 79
Analyses of constituent materials 79
Cement 79
Silt and other materials 79
Methods 79
Summary 81
Analysis of steel 82
Investigations of columns and floor slabs 82
The effect of electrolysis and sea water on cement mortars and concretes 82
Progress of the work 82
Preliminary work 82
Present work 83
Future work 84

ILLUSTRATIONS.

		Page.
PLATE I.	General view of buildings occupied by structural-materials testing laboratories	8
II.	Interior views of constituent-materials laboratory	20
III.	*A*, 40,000-pound hydraulic hand-power compression machine; *B*, Accelerated test apparatus for soundness tests of cement; *C*, Attachment for testing short transverse test pieces on Olsen long-lever cement-testing machine	22
IV.	*A*, Method of handling void apparatus; *B*, Hopper for filling void apparatus	24
V.	*A*, Apparatus for determining percentage of voids; *B*, Apparatus and connections for making void test on "one-size" material	24
VI.	*A*, Apparatus and connections for determining specific gravity of sand and screenings; *B*, Apparatus for removing silt from stone screenings; *C*, Apparatus and connections for determining specific gravity of large material	26
VII.	*A*, Bumping screen for making granulometric analysis; *B*, Method of filling one screen with material retained on another	28
VIII.	*A*, Implements used in making density tests of mortars; *B*, Cast-iron cube and cylinder molds; *C*, Spherical bearing blocks for compression tests	30
IX.	*A*, Typical failure of concrete cylinder; *B*, Failure of concrete cylinder—rupture through aggregate; *C*, Compressometers for measuring deformations of cylinders; *D*, Typical cones formed by rupture of concrete cylinders	32
X.	*A*, 200,000-pound compression machine; *B*, Concrete mixer, charging end, 1 cubic yard capacity	48
XI.	*A*, Apparatus for finishing top of bond-test specimens; *B*, Beam selected at random to show accuracy of rod spacing; *C*, Gang saw for cutting cubes from blocks of stone	50
XII.	Room for molding beams	50
XIII.	Interior view of moist room for storage of test pieces	52
XIV.	Interior view of testing room, beam section	52
XV.	*A*, Plain-concrete beam in testing machine with deformeters in place and stirrups for supporting beam at third points; *B*, Reinforced-concrete beam in testing machine ready for application of load	54
XVI.	*A*, Attachment and micrometer for measuring slip of rods; *B*, Steel carriage for handling beams	56
XVII.	Method of recording character of reinforced-concrete beam failures	56
XVIII.	*A*, Henning steel extensometer for measuring elongation of steel; *B*, Method of making bond test	64
XIX.	*A*, Shear specimen in machine ready for test; *B*, Interior view of storage room, building-block section	66

Page.

PLATE XX. Interior view of the mixing and molding and the testing rooms, building-block section 68
XXI. *A*, Building block in machine ready for transverse test; *B*, One-half of building block in machine ready for compression test... 72
XXII. Sectional plan of fire-test furnace, Underwriters' Laboratories, Chicago, Ill 74
XXIII. Heating chamber, Underwriters' Laboratories, Chicago, Ill 74
XXIV. *A*, Fire door filled with building blocks ready for test; *B*, Application of water jet to test panel after fire treatment 76
XXV. *A*, Permeability apparatus; *B*, View showing permeability tests and method of supporting test pieces 78
FIG. 1. General plan of buildings 9
2. Diagrams showing details of reenforcement of beams 48
3. Diagrams illustrating method for computation of concrete beams 58
4. Diagram illustrating bending moment between gage points 62
5. Specimen for concrete tension tests 66
6. Apparatus for concrete tension tests 67
7. Elevation of fire-test furnace, Underwriters' Laboratories, Chicago, Ill.. 74
8. Cross section of apparatus for holding permeability test pieces 77
9. Diagram of permeability apparatus and connections 78

PREFACE.

By Joseph A. Holmes.

The authority for the investigations described in this report is embraced in the following item of the bill making appropriations for the sundry civil expenses of the Government for the fiscal years 1906 and 1907, as follows:

For the continuation of the investigation of structural materials belonging to or for the use of the United States, such as stone, clays, cement, and so forth, under the supervision of the Director of the United States Geological Survey, to be immediately available, one hundred thousand dollars.

As illustrating the magnitude of the work which may be affected by these investigations, it may be stated that the expenditures of the Federal Government for building and construction work now approximate $30,000,000 per annum, while the expenditures of the country at large for similar purposes are in excess of $1,000,000,000 per annum.

It was with a view to reducing the cost and improving the quality of the materials used in this building and construction work that Congress was asked to provide for the investigations of structural materials now under way. In order that this work might be done in such a manner as to best meet the needs of the Government in this respect, an advisory board was organized, on which were placed by the President the chiefs of each of the Government bureaus having in charge important building and construction work, viz, the Chief Engineer of the Isthmian Canal; the Chief Engineer of the Reclamation Service; the Supervising Architect of the Treasury Department; the Chief of the Bureau of Ordnance of the Army; the Chief of the Bureau of Steam Engineering of the Navy; and representatives of the Corps of Engineers of the Army and of the Bureau of Yards and Docks of the Navy; and in order that these investigations thus conducted for the use of the Government might be satisfactory to the engineers of the country, and also of service in meeting the needs of the general public wherein they agree with the needs of the Government, representatives of the national engineering and allied organizations were similarly brought into consultation

as members of this advisory board. The members of this board connected with the Government service were asked to submit recommendations as to the investigations which were specially needed in connection with the construction work under their supervision; and the plans covering each investigation were submitted to and approved by the members of this board before the work was undertaken.

Engineers and architects, in drawing up plans and specifications for building and construction work, usually prescribe quantities of materials considerably in excess of the quantities which theoretically would be considered necessary for the purpose if exact knowledge concerning the properties, behavior, and permanence of the materials to be used were available; and it is fair to estimate that if the investigations under way can supply this information, they may be instrumental in reducing the cost of the construction work of the Government as much as 10 per cent on its present estimates.

As a result of several conferences among the representatives of the Government bureaus having in charge this construction work, it was decided that in view of the convenience and economy with which concrete might be more largely used in this work, and the lack of exact knowledge concerning its real properties and behavior and especially its strength and permanence under different conditions, concrete, reinforced concrete, and the constituent materials available for making it should receive a large share of attention in connection with the investigations provided for by Congress.

The importance of this work was further emphasized by the fact that a large quantity of this material might be needed in connection with the construction work of the Isthmian Canal, the Reclamation Service, the Corps of Engineers of the Army, and the Supervising Architect's Office. At that time attention was further called to the fact that inasmuch as a considerable period of time (from two to three years) would elapse in the investigations of concrete before any one series of tests could be completed—owing to the changes that concrete might undergo during periods of seasoning—these investigations should be begun immediately and pushed vigorously in order that the results might be available at the earliest practicable date for important construction work then being planned by these several branches of the Government service.

For the reasons above outlined, during the last two years the larger part of the appropriation for the investigations of structural materials has been devoted to an investigation of the character and distribution of the constituent materials available for concrete construction at centers where these materials were to be needed by the Government; the character and properties of the concrete and reinforced concrete made from these materials; such general properties

of concrete as its strength, porosity, permanence, and fire-resisting qualities; the more efficient methods of reinforcing concrete for different purposes; and the behavior of concrete and reinforced concrete under different treatment with salt or fresh water, acids, electric currents, fire, etc.

The general plan of operations in these investigations involves (1) the obtaining of information concerning the nature and extent of the deposits of sand, gravel, and stone which appear to be available for the purpose of making concrete at or near the centers where Government building and construction work are to be undertaken; (2) the collection of samples, ranging from a few tons to a carload in quantity, of these sands, gravels, or stone which would be representative of the larger deposits available for actual use, and the shipment of these samples to the central laboratory at St. Louis; (3) the testing of these materials, not only by chemical and physical examination of the materials themselves, but also by mixing them with a typical cement and using these mixtures in the making of blocks, beams, etc., of concrete and reinforced concrete under a variety of conditions; (4) the testing of the steel used in making the reinforced-concrete masses; (5) the seasoning of these masses for different periods of time, under a variety of conditions; and (6) the testing of these masses from time to time in such manner as to determine their different properties and their suitability for different classes of building and construction work.

Perhaps the controlling reasons for asking that the Federal Government provide for these general investigations are the following: (1) The building and construction work of the Government greatly exceeds that of any State, corporation, or individual. (2) This work by the Government, being done in all parts of the country under many different conditions, calls for the solution of a far larger number and variety of general problems than may be called for in connection with the work of any State, corporation, or individual; and therefore the information which is in this way gained for the use of the Government, and which it pays the Government to obtain for use in its own work alone, is of value to the States, municipalities, and the whole people of the country in connection with their own building and construction work; provided that the results of the investigations are published in such a way as to become available for the use of the general public. (3) The investigations conducted by the Government are presumably disinterested, there being no other interest to be served than the acquirement of facts for public use; and in view of the varied conditions under which these results are to be used, and the ease with which the Federal Government can obtain results of similar investigations in foreign countries, this Government work should be and presumably is conducted with

sufficient thoroughness and on a sufficiently comprehensive plan to make the results also valuable for the use of the general public. (4) There is less occasion for duplication when these investigations are conducted by the Federal Government, because of this thoroughness and comprehensiveness. If this work were done by the States, municipalities, or individuals, each for its own purposes, there would be an extensive and unnecessary duplication in labor, cost, and time. The above statement applies only to these general investigations of structural materials. In addition to these, many special tests of local materials will naturally be desired by each State or municipality or private individual; and such tests, having only a local application, of course should be made or paid for by the State or persons concerned.

As an illustration of the thoroughness with which those in charge have endeavored to conduct the investigations called for in connection with this testing of the materials to be used by the Government, the fact may be mentioned that during the two fiscal years ending June 30, 1907, the number of tests and determinations made aggregated 35,500; also that in certain investigations of plain and reinforced concrete made in connection with the work of the Supervising Architect of the Treasury Department, more than 1,000 concrete beams each 13 feet by 8 by 11 inches) have been made, representing different types of mixtures, reinforcement, etc. These beams are now being tested at intervals to determine the varied conditions in their makeup and the effects of age and seasoning.

Another of the numerous series of investigations, still under way, for the Supervising Architect's Office, is that in relation to the fire-resisting qualities of the materials needed for use in the construction of the public buildings—a work which requires the testing of many materials under many different conditions. As illustrating the importance of this investigation in relation to the general public, attention may be called to the fact that the fire losses in the United States, including not only property destroyed, but maintenance of fire departments, payment of insurance premiums, so-called curative agencies, and other incidentals, amounted to over $500,000,000 in 1906, or over 80 per cent of the value of the total new building construction. This is equivalent to an annual tax of over $6 per capita. By comparison, in six of the larger European countries the fire losses average only 33 cents per capita, and this in spite of the fact that the appliances and facilities for fighting fires in the United States are greatly superior to those in European countries. This discrepancy in the fire losses is due to the more extended use in other countries of building materials which are more or less fireproof.

The first report issued by the structural-materials division (Bulletin No. 324) related to the effects of the San Francisco earthquake

and fire on buildings and materials. The present report embraces a statement of the organization and equipment of the division. The next will relate to the studies of the constituent materials (sands, gravels, stone, and cement) used in the construction of concrete masses, samples of these materials having been collected in different parts of the country and examined in connection with this general investigation.

Other reports now ready for publication will embrace the results of other lines of investigation in relation to concrete and to reinforced-concrete masses made of these materials mixed with the typical Portland cement described in this report.

In connection with the taking up of any new line of investigation, much time is necessarily required for the preliminary work of procuring equipment, training experts to conduct the investigations, determining the exact methods which are to be employed, and bringing the establishment to a high degree of efficiency. This having been accomplished at the structural-materials laboratories, the work should hereafter go forward rapidly and in a satisfactory manner. There is serious need, however, of additional equipment for testing larger masses of material, for investigating clays and clay products, and for testing the fire-resisting properties of materials.

ORGANIZATION, EQUIPMENT, AND OPERATION OF THE STRUCTURAL-MATERIALS TESTING LABORATORIES AT ST. LOUIS, MO.

By Richard L. Humphrey.

INTRODUCTION.

HISTORICAL SKETCH.

The investigation of structural materials now being conducted at the structural-materials testing laboratories in Forest Park, St. Louis, Mo., had its inception at the Louisiana Purchase Exposition in 1904 in the collective Portland cement exhibit and model testing laboratory of the Association of American Portland Cement Manufacturers, the purpose of which was to exploit the growth and magnitude of the American Portland cement industry, the many uses of cement, and the equipment and method for testing cement proposed by the special committee of the American Society of Civil Engineers. This exhibit was under the direct supervision of Mr. Richard L. Humphrey.

The exhibit building served as a working illustration of reinforced-concrete construction until its completion, September 1, 1904. The exhibit comprised: (1) A collection of raw materials from which Portland cement is manufactured, together with samples of this material taken in various stages of manufacture; (2) a collection of various sands, gravels, cinders, broken stone, and metal used in concrete construction, together with photographs and models of concrete and reinforced-concrete structures in all parts of the world; (3) a library of books and files of the various technical journals devoted to cement mortar and concrete; (4) a completely equipped model testing laboratory; (5) a collection of machines for mixing and molding concrete; and (6) a collection showing the many forms in which concrete is used.

The laboratory was in operation until December 15, 1904. During this period the laboratory work was confined to illustrating the proper methods for testing cement and to investigations of the comparative value of a few sands, gravels, and broken stones used in

cement mortars and concretes in some of the principal cities of the country. Outside exhibits of full-size beams, floors, columns, pipes, railroad ties, fence posts, burial vaults, and building blocks were made by several construction companies, and at the close of the exposition some of these structures were tested to destruction.

Shortly after the close of the exposition the buildings occupied by the exhibit became the property of the city of St. Louis and the equipment of the laboratory was purchased by Mr. R. W. Lesley, and presented to the University of Pennsylvania. Before the equipment was moved, however, an earnest appeal was made to Congress for funds to continue the work under Government supervision.

About 100 yards west of the cement exhibit was located the fuel-testing plant of the United States Geological Survey. The investigation of fuels during the exposition was carried on under an appropriation of $60,000 made by Congress in April, 1904, and was under the direct supervision of Mr. Joseph A. Holmes, in charge of the technologic branch. The valuable results obtained in the cement laboratory and the great need of more reliable information concerning the various structural materials suggested the advisability of having these investigations carried on by the Government. Accordingly, when the Director of the United States Geological Survey asked Congress for an appropriation for the continuance of the investigation of fuels he also asked for a small appropriation for the continuation of the work begun by the Association of American Portland Cement Manufacturers. In the spring of 1905 the sum of $12,500 was made available for this purpose, with the understanding that heat, light, and power were to be supplied from the fuel-testing plant. The work was placed under the direction of Mr. Joseph A. Holmes, Mr. Richard L. Humphrey being appointed in immediate charge of the structural-materials testing laboratories.

Upon the passage of the bill appropriating funds for the continuation of the work it was arranged, through the courtesy of Mr. R. W. Lesley and Dr. Edgar Marburg, professor of civil engineering, University of Pennsylvania, that the equipment might be retained by the Geological Survey. Permission was also granted by the city of St. Louis to continue the work in Forest Park.

NATIONAL ADVISORY BOARD ON FUELS AND STRUCTURAL MATERIALS.

ORGANIZATION.

In order that the money available for this work might be so expended as to secure the most efficient results, it was thought desirable to create an advisory board composed of members appointed by the various national societies directly interested, to whom could be

referred the scope to be covered by the investigations and the methods to be used, and from whom could be obtained a critical opinion of the results. Accordingly an invitation was extended by the Secretary of the Interior, with the indorsement of the Secretary of Agriculture, to the various national societies, requesting that the president or some other representative of each society be appointed to serve on the national advisory board for the investigation of fuels and structural materials.

In response to this invitation a meeting was held in Washington, D. C., June 3, 1905, in the office of the Director of the United States Geological Survey. Later the personnel of this board was slightly changed, and in March, 1906, the members received direct appointments from President Theodore Roosevelt. In addition, a representative was appointed from each of the several Government bureaus interested in the investigations.

PERSONNEL.

The original advisory board consisted of the following representatives of the various national societies and Government bureaus.

The American Institute of Mining Engineers: John Hays Hammond, past president, New York; Robert W. Hunt (Robert W. Hunt & Co., testing engineers, Chicago, Pittsburg, and New York), Chicago, Ill.; B. F. Bush, manager and vice president, Western Coal and Mining Company, St. Louis, Mo.

The American Institute of Electrical Engineers: Francis B. Crocker, professor of electrical engineering, Columbia University, New York; Henry C. Stott, superintendent of motive power, Interborough Rapid Transit Company, New York.

The American Society of Civil Engineers: C. C. Schneider, past president, chairman committee on concrete and reinforced concrete, Philadelphia, Pa.; George S. Webster, chairman committee on uniform tests of cement, city engineer, Philadelphia, Pa.

The American Society of Mechanical Engineers: W. F. M. Goss, dean of the School of Engineering, University of Illinois, Urbana, Ill; George H. Barrus, steam engineer, Boston, Mass.; P. W. Gates, Chicago, Ill.

The American Society for Testing Materials: Charles B. Dudley, president, Altoona, Pa.; Robert W. Lesley, vice president, Philadelphia, Pa.

The American Institute of Architects: George B. Post, past president, New York; William S. Eames, past president, St. Louis, Mo.

The American Railway Engineering and Maintenance of Way Association: H. G. Kelley, past president, Minneapolis, Minn.; Julius Kruttschnitt, director of maintenance and operation Union Pacific Railroad, Chicago, Ill.; Hunter McDonald, past president, chief engineer Nashville, Chattanooga and St. Louis Railroad, Nashville, Tenn.

The American Railway Master Mechanics' Association: J. F. Deems, general superintendent of motive power, New York Central lines, New York; A. W. Gibbs, general superintendent of motive power, Pennsylvania Railroad, Altoona, Pa.

The American Foundrymen's Association: Richard Moldenke, secretary, Watchung, N. J.

The Association of American Portland Cement Manufacturers: John B. Lober, president, Philadelphia, Pa.

The Geological Society of America: Samuel Calvin, professor of geology, University of Iowa, Iowa City, Iowa; I. C. White, State geologist, Morgantown, W. Va.

The Iron and Steel Institute: Julian Kennedy, metallurgical engineer, Pittsburg, Pa.; C. S. Robinson, vice president, Youngstown Sheet and Tube Company, Youngstown, Ohio.

The National Association of Cement Users: Richard L. Humphrey, president, Philadelphia, Pa.

The National Board of Fire Underwriters: Chas. A. Hexamer, chairman board of consulting experts, Philadelphia, Pa.

The National Fire Protective Association: E. U. Crosby, Philadelphia, Pa.

The National Brick Manufacturers' Association: John W. Sibley, treasurer, Sibley-Menge Press Brick Company, Birmingham, Ala.; William D. Gates, American Terra Cotta and Ceramic Company, Chicago, Ill.

The National Lumber Manufacturers' Association: Nelson W. McLeod, past president, St. Louis, Mo.; John L. Kaul, president Southern Lumber Manufacturers' Association, Birmingham, Ala.

The Corps of Engineers, U. S. Army: Lieut. Col. William L. Marshall, New York.

The Isthmian Canal Commission: Lieut. Col. O. H. Ernst, Washington, D. C.

The Bureau of Yards and Docks, U. S. Navy: Lieut. Frank T. Chambers, civil engineer, Washington, D. C.

The Supervising Architect's Office, United States Treasury Department: James K. Taylor, Supervising Architect, Washington, D. C.

The Reclamation Service, United States Interior Department: F. H. Newell, Director, Washington, D. C.

Since the first meeting the following additional appointments have been made:

The American Institute of Mining Engineers: E. V. D'Invilliers, mining engineer, Philadelphia, Pa.

The National Lumber Manufacturers' Association: William Irvine, president, Chippewa Falls, Wis.

The Bureau of Ordnance, U. S. Army: Gen William Crozier, chief, Washington, D. C.

The Bureau of Steam Engineering, U. S. Navy: Admiral Charles W. Rae, chief, Washington, D. C.

The Isthmian Canal Commission: John F. Stevens, chief engineer, Washington, D. C.; Lieut. Col. George W. Goethals, Washington, D. C.

The following members of the board have resigned:

Mr. Nelson W. McLeod, Lieut. Col. O. H. Ernst, John F. Stevens.

The purpose of this board is to further the work and to render it of the broadest possible application by bringing to bear upon the investigation the advice and suggestions of a widely representative body. It was formally organized in Washington, D. C., March 31, 1906, with Dr. Charles B. Dudley as president and Mr. Richard L. Humphrey as secretary. This board also acts in an advisory capacity toward the Forest Service.

JOINT COMMITTEE ON CONCRETE AND REINFORCED CONCRETE.

ORGANIZATION.

The members of the special committees on concrete and reinforced concrete of the American Society of Civil Engineers, the American Society for Testing Materials, the American Railway Engineering and Maintenance of Way Association, and the Association of American Portland Cement Manufacturers met at Atlantic City, N. J., on June 17, 1904. Mr. C. C. Schneider was elected temporary chairman, and Prof. A. N. Talbot was elected temporary secretary. The proposed plan of action of the special committee of the American Society of Civil Engineers was outlined, involving the appointment of subcommittees on plan and scope, on tests, and on ways and means. It was voted that the other committees present should cooperate with the special committee of the American Society of Civil Engineers, and that the work should be carried on under a common organization to be known as the joint committee on concrete and reinforced concrete. Mr. C. C. Schneider and Mr. J. W. Schaub, as chairman and secretary, respectively, of the committee of the American Society of Civil Engineers, were made chairman and secretary of the joint committee. Mr. Emil Swensson was elected vice chairman, and upon the resignation of Mr. Schaub Mr. Richard L. Humphrey was elected secretary.

PERSONNEL.

The present members of the joint committee and of the various subcommittees are as follows:

OFFICERS.

Chairman: C. C. Schneider.
Vice chairman: Emil Swensson.
Secretary: Richard L. Humphrey.

MEMBERS.

American Society of Civil Engineers (special committee on concrete and reinforced concrete):

Greiner, J. E., assistant chief engineer, Baltimore and Ohio Railroad, Baltimore, Md.
Hatt, W. K., professor of civil engineering, Purdue University, Lafayette, Ind.
Hoff, Olaf, vice president Butler Brothers, Hoff & Co., New York, N. Y.
Humphrey, Richard L., consulting engineer, Philadelphia, Pa.
Lesley, R. W., president American Cement Company, Philadelphia, Pa.
Schaub, J. W., consulting engineer, Chicago, Ill.
Schneider, C. C., consulting engineer, Philadelphia, Pa.
Swensson, Emil, consulting engineer, Pittsburg, Pa.
Talbot, A. N., professor of sanitary engineering, University of Illinois, Urbana, Ill.
Worcester, J. R., consulting engineer, Boston, Mass.

American Society for Testing Materials (committee on reinforced concrete):

Fuller, William B., consulting engineer, New York, N. Y.
Heidenreich, E. Lee, consulting engineer, New York, N. Y.
Humphrey, Richard L., consulting engineer, Philadelphia, Pa.
Johnson, Albert L., consulting engineer, St. Louis, Mo.
Lanza, Gaetano, professor of theoretical and applied mechanics, Massachusetts Institute of Technology, Boston, Mass.
Lesley, R. W., president American Cement Company, Philadelphia, Pa.
Marburg, Edgar, professor of civil engineering, University of Pennsylvania, Philadelphia, Pa.
Mills, Chas. M., principal assistant engineer Philadelphia Rapid Transit Company, Philadelphia, Pa.
Moisseiff, Leon S., assistant engineer department of bridges, New York, N. Y.
Quimby, Henry H., assistant engineer of bridges, bureau of surveys, Philadelphia, Pa.
Taylor, W. P., engineer in charge of testing laboratory, Philadelphia, Pa.
Thompson, Sanford E., consulting engineer, Newton Highlands, Mass.
Turneaure, F. E., dean of College of Mechanics and Engineering, University of Wisconsin, Madison, Wis.
Wagner, Samuel Tobias, assistant engineer Philadelphia and Reading Railroad, Philadelphia, Pa.
Webster, George S., chief engineer bureau of surveys, Philadelphia, Pa.

American Railway Engineering and Maintenance of Way Association (subcommittee on reinforced concrete):

Boynton, C. W., chief inspector Universal Portland Cement Company, Chicago, Ill.
Cunningham, A. O., chief engineer Wabash Railroad, St. Louis, Mo.
Moore, C. H., engineer of grade crossings, Erie Railroad, New York, N. Y.
Scribner, Gilbert H., jr., contracting engineer, Chicago, Ill.
Swain, George F., professor of civil engineering, Massachusetts Institute of Technology, Boston, Mass.

Association of American Portland Cement Manufacturers (committee on concrete and steel concrete):

Fraser, Norman D., president Chicago Portland Cement Company, Chicago, Ill.
Griffiths, R. E., vice president American Cement Company, Philadelphia, Pa.
Hagar, Edward M., president Universal Portland Cement Company, Chicago, Ill.
Newberry, Spencer B., manager Sandusky Portland Cement Company, Sandusky, Ohio.

STANDING SUBCOMMITTEES.

SUBCOMMITTEE ON WAYS AND MEANS.

R. W. Lesley, chairman.
J. E. Greiner.
Olaf Hoff.
A. L. Johnson.
A. O. Cunningham.
Edward M. Hagar.

SUBCOMMITTEE ON TESTS.

Richard L. Humphrey, chairman.
A. N. Talbot.
W. K. Hatt.
Olaf Hoff.
Spencer B. Newberry.

SPECIAL SUBCOMMITTEES.

HISTORY.

To collate existing literature and results of previous investigations.

J. R. Worcester, chairman.
R. W. Lesley.
F. E. Turneaure.
George F. Swain.
R. E. Griffiths.

CONCRETE.

(a) Study of aggregates, proportions, and mixing.

Sanford E. Thompson, chairman.
William B. Fuller.
W. P. Taylor.
Olaf Hoff.
George S. Webster.
C. H. Moore.

(b) Physical characteristics, waterproofing, etc.

A. O. Cunningham, chairman.
E. Lee Heidenreich.
Sanford E. Thompson.
Samuel Tobias Wagner.
C. W. Boynton.

(c) Strength and elastic properties.

J. E. Greiner, chairman.
Charles M. Mills.
W. P. Taylor.
George S. Webster.
Gilbert H. Scribner, jr.

BEAMS.

(a) Simple beams.

F. E. Turneaure, chairman.
J. E. Greiner.
C. C. Schneider.
J. R. Worcester.
A. O. Cunningham.

(b) T-beams, floor slabs, etc.

Samuel Tobias Wagner, chairman.
J. W. Schaub.
E. Lee Heidenreich.
Gaetano Lanza.
C. H. Moore.

COLUMNS.

Gaetano Lanza, chairman.
William B. Fuller.
Edgar Marburg.
Leon S. Moisseiff.
Henry H. Quimby.

FIRE-RESISTING QUALITIES.

C. W. Boynton, chairman.
C. C. Schneider.
A. L. Johnson.
Norman D. Fraser.
Edward M. Hagar.

FAILURES OF CONCRETE STRUCTURES.

Emil Swensson, chairman.
J. W. Schaub.
A. L. Johnson.
Gilbert H. Scribner, jr.
George F. Swain.

ARCHES.

Henry H. Quimby, chairman.
Emil Swensson.
Edgar Marburg.
Charles M. Mills.
Leon S. Moisseiff.

COOPERATION BETWEEN NATIONAL ADVISORY BOARD AND JOINT COMMITTEE.

The national advisory board at its first meeting discussed and revised the tentative programme adopted for the continuation of the work begun during the exposition. In addition to the study of the properties of concrete and reinforced concrete, this programme provided for an examination of the constituent materials of concrete, including the collection of representative samples of crushed stone, gravel, sand, slag, cinders, etc., from all parts of the country, and the testing of these samples to determine their relative value for mortar and concrete.

In view of the similarity of the investigations outlined by the joint committee, and those about to be started by the Geological Survey, there was discussed at a meeting of the joint committee in Cleveland, Ohio, June, 1905, the advisability of joint cooperation. At a meeting a few days later in Atlantic City, N. J., Mr. Joseph A. Holmes, representing the Director of the Geological Survey, submitted a basis of cooperation providing for the execution of this work by the Geological Survey, either in its laboratories at St. Louis or in other laboratories which possess the requisite facilities, under the general direction of the joint committee. This plan of cooperation was mutually agreed to and the subcommittee on tests was instructed to cooperate with the Geological Survey in accordance with this understanding.

On December 14, 1905, the subcommittee on tests submitted a revised programme of tests, which was amended and adopted by the joint committee. This programme was approved by the national advisory board March 31, 1906, and now constitutes the working outline for these investigations.

FUNDS.

The first appropriation by Congress for the investigation of structural materials amounted to $12,500, of which $5,000 was available until June 30, 1905, and $7,500 until June 30, 1906.

Some months before the close of the fiscal year ending June 30, 1906, this small appropriation of $12,500 for the work at the structural-materials testing laboratories became exhausted, and the work was nearly at a standstill until a new appropriation of $100,000 became available July 1, 1906. With this increased appropriation the work was greatly extended, new equipment purchased, and two large buildings, used during the exposition by the department of mines and metallurgy, were occupied for testing purposes.

Another appropriation of $100,000 for the fiscal year July 1, 1907, to June 30, 1908, insures the continuance of the work which is now being conducted as described in the following pages.

STRUCTURAL-MATERIALS DIVISION.

ORGANIZATION.

The investigation of structural materials assigned to a division of the technologic branch of the United States Geological Survey is under the general supervision of Mr. Joseph A. Holmes, expert in charge, with Mr. Herbert M. Wilson as chief engineer, and is under the direct supervision of Mr. Richard L. Humphrey, engineer in charge.

GENERAL VIEW OF BUILDINGS OCCUPIED BY STRUCTURAL-MATERIALS TESTING LABORATORIES.

Office and constituent-materials laboratory in foreground.

The organization of the structural-materials division comprises the following sections:

Administrative.
Metallurgical.
Editorial.
Computing.
Drafting.
Field.
Constituent materials.
Beam.
Tension and shear.
Slab.
Column.
Building block.
Permeability.
Chemical.
Photographic.

BUILDINGS.

The structural-materials testing laboratories, located in Forest Park, St. Louis, Mo. (Pl. I and fig. 1), occupy the cement and foundry

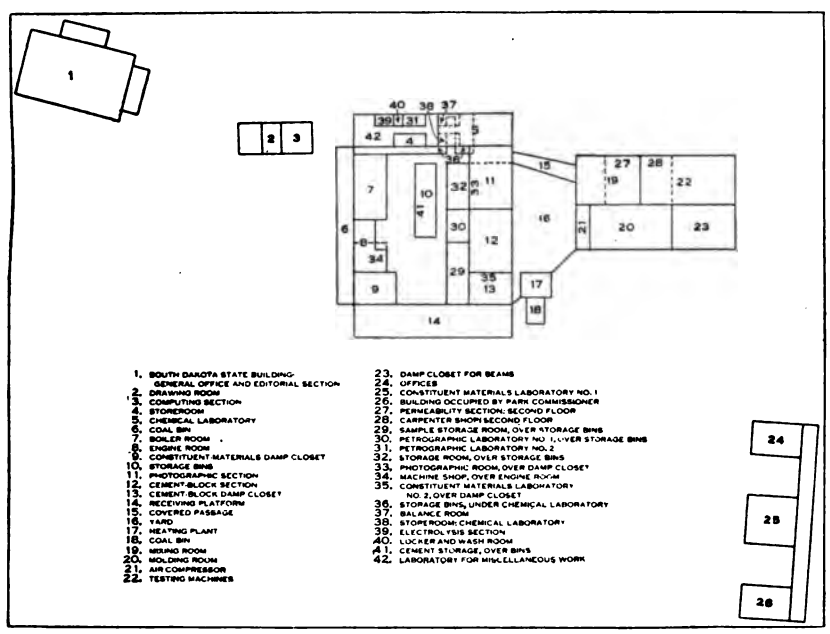

FIG. 1.--General plan of buildings occupied by structural-materials testing laboratories in Forest Park, St. Louis, Mo.

buildings and the metal pavilion of the Louisiana Purchase Exposition. The cement building is constructed entirely of reinforced concrete and was built by the Association of American Portland Cement Manufacturers. It consists of three pavilions, separated by intermediate courts, and connected across the front by a continuous loggia. The central pavilion is 30 feet square and is used by the constituent-materials section; that on the right is used as a general office; that on the left is used by the park commission of the city of St. Louis, by whose courtesy these laboratories are permitted to remain in Forest Park.

The metal pavilion, 60 by 100 feet, is used by the beam, the permeability, the shear and tension, and the column sections, and by the carpenter shop and the steel-cutting plant. In order to put this building into proper condition for use it was necessary to replace the original glass sides with wooden sheathing and to lay a concrete floor. In addition, a ceiling at a 12-foot elevation was built, affording a second story of the full size of the building. Partitions were erected dividing the building into four rooms, which are used for mixing, molding, storing, and testing beams, columns, and shear and tension test pieces.

The foundry originally consisted of a steel skeleton having a roof of corrugated iron and sides of wire netting. Up to February, 1907, this building was used by the fuel-testing plant for testing coke, and when these tests were finished it was sheathed with wood, a new roof was built, and it now houses the building-block, the petrographic, and the photographic sections and a portion of the constituent-materials section. It also contains 25 bins, each of one car capacity, for storing material; a workshop equipped with a machine lathe, drill press, and emery grinder; a blacksmith shop, and the necessary power equipment for the entire plant.

Power was furnished by the fuel-testing plant until its removal to the Jamestown Exposition at Norfolk, Va., in April, 1907. The one-story annex to one end of the foundry is occupied by the chemical and electrolysis laboratory. In addition to these buildings a one-story frame building contains the computing and drafting sections.

EQUIPMENT.

The greater part of the equipment of the model cement-testing laboratory of the Association of American Portland Cement Manufacturers was loaned for some time, through the courtesy of Mr. R. W. Lesley and Dr. Edgar Marburg, and was subsequently purchased by the Geological Survey. The remainder of the equipment which had been loaned for exhibition purposes was afterwards purchased from the manufacturers at very low prices.

In a large number of instances the manufacturers, recognizing the importance of the investigations being carried on at the laboratories, and desiring to be of some assistance, have supplied equipment for the purpose at greatly reduced prices, in some cases at less than cost.

In addition to the equipment loaned to or purchased by the Geological Survey, a small amount of equipment belonging to the United States Reclamation Service has been used.

In the following list of the more important items of equipment it was deemed inadvisable to include the smaller pieces of apparatus, as these are mentioned in connection with the work of the different sections. Half-tone reproductions of photographs of only a portion of

the apparatus are shown in the following pages. The list of the principal equipment follows:

One 600,000-pound, motor-driven, automatic, Universal four-screw testing machine, manufactured by Tinius Olsen & Co., Philadelphia. This machine has a full equipment of tools for making tests of columns up to 30-foot lengths, transverse tests on beams up to 25-foot span, and tests for tensile strength for specimens up to 24 feet in length, with an elongation of 25 per cent.

One 200,000-pound, motor-driven, automatic, Universal four-screw testing machine, manufactured by Tinius Olsen & Co., Philadelphia. This machine has a full equipment of tools for making compression and tension tests up to 4 feet in length and transverse tests on beams up to 10-foot span.

One 200,000-pound, motor-driven, automatic, Universal four-screw testing machine, manufactured by Tinius Olsen & Co., Philadelphia. This machine also has a full equipment of tools for making tension and compression tests up to 4 feet in length and transverse tests on beams up to 20-foot span.

One 200,000-pound, motor-driven, automatic, Universal four-screw testing machine, manufactured by Tinius Olsen & Co., Philadelphia. This machine was furnished by the Reclamation Service, and has a full equipment of tools for making tension and compression tests up to 4 feet in length and transverse tests on beams up to 20-foot span.

One 200,000-pound, motor-driven, automatic, three-screw testing machine, manufactured by Tinius Olsen & Co., Philadelphia. This machine has a full equipment of tools for making compression and tension tests up to 4 feet in length and transverse tests on beams up to 20-foot span.

One 100,000-pound, motor-driven, automatic, Universal three-screw testing machine manufactured by Tinius Olsen & Co., Philadelphia. This machine has a full equipment of tools for making tension and compression tests and transverse tests on beams up to 16-foot span.

One 40,000-pound, hydraulic, hand-driven, compression machine, mauufactured by the Falkenau-Sinclair Company, Philadelphia. This machine is designed for testing small test pieces in compression, and was furnished by the Reclamation Service.

One 50,000-pound, hydraulic, hand-driven testing machine, very kindly loaned by Tinius Olsen & Co., Philadelphia.

One 2,000-pound, long-lever, tensile testing machine for cement, manufactured by Tinius Olsen & Co., Philadelphia.

One 2,000-pound, automatic shot, short-lever, tensile testing machine for cement, manufactured by Tinius Olsen & Co., Philadelphia.

One 2,000-pound, automatic shot, short-lever, tensile testing machine for cement, manufactured by the Fairbanks Company, New York.

One motor-driven torsion machine for testing wire, manufactured by Tinius Olsen & Co., Philadelphia, and furnished by the Reclamation Service.

One hand-driven, 10,000-pound tension machine for testing wire, and also adapted for making transverse tests on small specimens, manufactured by Tinius Olsen & Co., Philadelphia, and supplied by the Reclamation Service.

One set of tools for making shear tests on concrete cylinders 6 inches in diameter and 24 inches long, together with 12 cast-iron molds. The apparatus is adapted for shearing out sections 2, 4, 6, 8, 10, or 12 inches in length.

One one-half cubic yard capacity concrete cubical mixer, mounted on skids, manufactured by the Municipal Engineering and Contracting Company, Chicago. This mixer was very generously loaned by the manufacturers during the first year's work in the laboratories, and was afterwards purchased from them at a very low price.

One 1 cubic yard capacity cubical concrete mixer, with automatic charging hopper mounted on skids; and one motor-driven one-half cubic yard capacity cubical concrete mixer, with an automatic charging hopper mounted on skids. These mixers were manu-

factured by the Municipal Engineering and Contracting Company, and very generously sold by them for an amount much lower than the market price.

Five hollow concrete block machines manufactured and very kindly loaned by the American Hydraulic Stone Company, Denver, Colo.; the Miracle Pressed Stone Company, Minneapolis, Minn.; the P. B. Miles Manufacturing Company, Jackson, Mich.; the Dykema Company, Grand Rapids, Mich.; and the Century Machine Company, Jackson, Mich. These machines, representing different types, were selected by a committee of the Concrete Block Machine Manufacturers' Association.

Six steel molds, with 90 extra interchangeable bottoms for 8 by 11 inches by 13-foot beams, also adjustable for 6-, 8-, and 10-foot beams.

Seventy-two cast-iron molds for cylindrical test pieces 8 inches in diameter and 16 inches long, 12 of which were furnished by the Reclamation Service.

Twenty-four cast-iron molds for 6-inch cubes, 12 of which were also furnished by the Reclamation Service.

Sixty-three single brass molds for transverse specimens of cement 1 by 1 inch in cross section and 13 inches long; 10 of these molds were furnished by the Reclamation Service.

Eighteen 3-gang and 18 5-gang standard brass briquet molds. Eight of the 3-gang and 10 of the 5-gang molds were furnished by the Reclamation Service.

Twenty 3-gang 2-inch cube molds of brass. Fourteen of the 2-inch cube molds were furnished by the Reclamation Service.

Four cubic-foot measures.

One hundred and eighty cement storage cans of galvanized iron, 24 inches in diameter and 29½ inches high.

Three hundred tin storage cans, 6⅛ inches in diameter, 6¾ inches high, with a 4-inch diameter screw top.

One complete accelerated-test apparatus for cement, including a copper tank, metal-frame support, and constant-level bottle.

One 5-gallon still.

One water bath of heavy copper.

One 4-inch diameter electrical hot plate.

One 12-inch diameter electrical hot plate.

One 10-horsepower American standard feed-water heater.

Two soapstone moist closets, 43¾ by 24 by 18 inches.

Nine soapstone tanks, 7 feet long and 30 inches wide, eight of which are 6 inches and one 30 inches deep, inside measure. These tanks are arranged in tiers of three each, on steel frames, and piped for running water. Two tiers were manufactured by Stambach & Love, Philadelphia, and one by Cahill, Swift & Co., St. Louis.

Two standard mixing tables with glass tops.

Two sets standard brass sieves 8 inches in diameter, having 10, 20, 30, 40, 50, 80, 100, and 200 meshes per linear inch.

Two automatic sifting machines, one belt driven and the other motor driven, manufactured by Howard & Morse, Brooklyn, N. Y.

Three analytical balances.

Five Troemner scales, two No. 7, two No. 293, and two No. 80; the No. 7 scale being furnished by the Reclamation Service.

Five movable platform scales.

Three hand trucks.

One steel carriage for raising and moving concrete beams. This consists of an 8-inch channel, supported by steel legs 15 feet long, the bottom flange of which serves as a track for two 1-ton trolleys with roller bearings, bearing differential hoists.

One air compressor with a complete outfit of air tampers and tools, generously loaned by the Ingersoll-Rand Drill Company, New York.

One complete outfit for preparing cubes of stone, consisting of a gang saw, band saw, slicing machine, and polishing table.

Four compressometers.
Two extensometers.
Four beam deformeters.
Four slip of rod apparatus.
Three Thatcher computing machines.
Two Draper recording thermometers.
One Bristol recording thermometer.
One muffle furnace.
Two gas furnaces.
One gas generator for chemical laboratory.
One Buffalo portable forge.
Two lever jacks.
One Lodge & Shipley machine lathe.
One 70-horsepower horizontal tubular boiler.
One 74-horsepower Habercorn slide-valve engine.
One Worthington fire pump.
One Westinghouse dynamo.

In addition to the above equipment all the divisions of the laboratories have a complete equipment of smaller apparatus, and facilities for making the tests covered by the investigations.

ACKNOWLEDGMENT OF DONATIONS.

The extent and importance of the investigations of structural materials being conducted by the United States Geological Survey are such that in order to procure the needed information in a reasonable time, it is necessary to make the available appropriations cover as much work as possible. These appropriations are relatively small in comparison with the amount of work to be done, and it is extremely desirable that all persons interested in this work should accord it their hearty support as far as possible. The results of these investigations will be of great value not only to the Government, but to the public at large, especially engineers, architects, contractors, manufacturers, and all others who manufacture or use structural materials. The help which has been received up to the present time has made it possible to devote to the investigations a large amount of money that otherwise would have been spent in defraying transportation charges for materials and men, and for purchasing the materials with which to conduct the investigations. In most cases it has been simply necessary to make known the needs of these laboratories for materials or transportation; in a few cases material has been especially solicited, and in almost every case the reply has been a generous compliance with the request.

Railroads have aided in the work by transporting the materials and the employees of the laboratories free of charge. Special acknowledgments are made to those lines and to certain Portland cement manufacturers, collectively and individually; also to the Municipal Engineering and Contracting Company, the Hydrex Felt Engineering Company, the Concrete Block Machine Manufacturers'

Association, the Underwriters' Laboratories of Chicago, the Illinois Steel Company, the Carnegie Steel Company, and the Ingersoll-Rand Drill Company.

Acknowledgment is due the Union Sand and Material Company, of St. Louis, Mo., for donations of material as well as for courtesies extended and for service in delivering material by teams for use in these laboratories.

The tests that are being made require large quantities of cement, sand, gravel, stone, and steel, and up to the present time these have been contributed generously and promptly upon request. For donations of Portland cement acknowledgments are made to the following companies:

Alpha Portland Cement Co., Easton, Pa.
American Cement Co., Egypt, Pa.
Atlas Portland Cement Co., Hannibal, Mo.
Bonneville Portland Cement Co., Siegfried, Pa.
Chicago Portland Cement Co., Oglesby, Ill.
Coplay Cement Manufacturing Co., Coplay, Pa.
Dexter Portland Cement Co., Nazareth, Pa.
Edison Portland Cement Co., Stewartsville, N. J.
German-American Portland Cement Co., La Salle, Ill.
Iola Portland Cement Co., Iola, Kans.
Lehigh Portland Cement Co., Mitchell, Ind.
Lawrence Cement Co., Siegfried, Pa.
Northampton Portland Cement Co., Stockerstown, Pa.
Omega Portland Cement Co., Jonesville, Mich.
Peerless Portland Cement Co., Union City, Mich.
Penn Allen Portland Cement Co., Bath, Pa.
Pennsylvania Cement Co., Bath, Pa.
Phoenix Cement Co., Nazareth, Pa.
Sandusky Portland Cement Co., Syracuse, Ind.
St. Louis Portland Cement Co., St. Louis, Mo.
Universal Portland Cement Co., Chicago, Ill.
Virginia Portland Cement Co., Fordwick, Va.
Vulcanite Portland Cement Co., Vulcanite, N. J.
Western Portland Cement Co., Yankton, S. Dak.
Whitehall Portland Cement Co., Cementon, Pa.
Wolverine Portland Cement Co., Coldwater, Mich.

For contributions of steel bars acknowledgments are made to the Illinois Steel Company and to the Carnegie Steel Company. For donations of sand, gravel, and crushed stone in carload lots acknowledgments are made to the following:

Carmichael, Wm. R., Williamsport, Ind.
Casper-Stolle Construction Co., East St. Louis, Ill.
Chicago Crushed Stone Co., Chicago, Ill.
East St. Louis Stone Co., East St. Louis, Ill.
Fruin-Bambrick Construction Co., St. Louis, Mo.
Grafton Quarry Co., Grafton, Ill.
McLaughlin-Mateer Co., Kankakee, Ill.
Ozark Red Granite Co., St. Louis, Mo.
Reliance Quarry Co., Alton, Ill.
Rickey, C. A., Louisville, Nebr.
Schneider Granite Co., St. Louis, Mo.
Union Sand and Material Co., St. Louis, Mo.
United Railways of St. Louis.

For courtesies extended and facilities afforded in investigating the various deposits of sand, stone, and gravel, forming a part of the field work of these laboratories, acknowledgments are made to the following:

American Sand and Gravel Co., Chicago, Ill.
American Smelting and Refining Co., Omaha, Nebr.
Andrew & Hoertz, Louisville, Ky.
Atwood-Davis Sand Co., Beloit, Wis.
Bambrick-Bates Construction Co., St. Louis, Mo.
Beloit Concrete Stone Co., Beloit, Wis.
Biesanz Stone Co., Minnesota City, Minn.
Big Rock Stone and Construction Co., Little Rock, Ark.
Buckeye Dredging Co., Columbus, Ohio.
Bull Frog Mining Co., Joplin, Mo.
Carey Construction Co., Cleveland, Ohio.
Casparis Stone Co., Columbus, Ohio.
Chicago, Milwaukee and St. Paul Railroad.
Chilton, Chas., Ottumwa, Iowa.
City of Madison, Madison, Wis.
Cleveland Builders Supply Co., Cleveland, Ohio.
Clifton Sand and Gravel Co., Vicksburg, Miss.
Cobb, H. H. & L. D., Fort Worth, Tex.
Coughlan, T. R., Mankato, Minn.
Darragh Bros., Marble Falls, Tex.
Eagle Point Lime Works, Dubuque, Iowa.
Fleming & Co., Cincinnati, Ohio.
Glencoe Lime and Cement Co., St. Louis, Mo.
Granby Zinc and Mining Co., Joplin, Mo.
Greene, J. A., Stone City, Iowa.
Greenleaf Stone Co., Greenleaf, Wis.
Hillsboro Stone Co., Hillsboro, Ohio.
Horton Stone and Milling Co., Springfield, Mo.
Houston and Texas Central Railroad, Houston, Tex.
Hydraulic Pressed Brick Co., St. Louis, Mo.
Jahuke Navigation Co., New Orleans, La.
Jarrett Construction Co., Sibley, La.
Kelley Sand and Fuel Co., Burlington, Iowa.
Laclede Fire Brick Co., St. Louis, Mo.
La Crosse Stone Co., La Crosse, Wis.
Lake Shore Stone Co., Milwaukee, Wis.
Lauer, Jacob, St. Paul, Minn.
Lauterdale, J. W., Millican, Tex.
Le Claire Stone Co., Bettendorf, Iowa.
Little, C. H., & Co., Detroit, Mich.
Louisiana Railway and Navigation Co., Colfax, La.
Loveland Stone and Gravel Co., Loveland, Ohio.
McTernan & Halpin Construction Co., Kansas City, Mo.
Merchants Ice and Coal Co., St. Louis, Mo.
Miami Sand and Gravel Co., Loveland, Ohio.
Mineral Supply Co., Minneapolis, Minn.
Missouri Pacific Railway, Little Rock, Ark.
Mitchell Fire Clay Co., St. Louis, Mo.
Missouri, Kansas and Texas Railway, Osage, Okla.
Moores, Cooney Co., Cincinnati, Ohio.
Moorman, E. S., Baton Rouge, La.
Mound City Gravel Co., St. Louis, Mo.
New Union Sand Co., St. Louis, Mo.
Norton, C. E., Ottumwa, Iowa.
Ohio and Michigan Gravel and Sand Co., Toledo, Ohio.
Ohio River Sand Co., Louisville, Ky.
Ousley, Dr. J. D., Denison, Tex.
Perkinson Bros., St. Louis, Mo.
Rucker Stone Co., Greenfield, Ohio.
St. Joseph Lead Co., Hoffman, Mo.
St. Joseph Street Construction Co., St. Joseph, Mo.
Samuels & Holmes, Kansas City, Mo.
Scullin-Gallagher Iron and Steel Co., St. Louis, Mo.
Sheehan, J. P., Austin, Tex.
Shreveport Sand and Concrete Co., Shreveport, La.
Sibley Quarry Co., Sibley, Mich.
Southern Hydraulic Stone Co., Galveston, Tex.
Stewart-Peck Sand Co., Kansas City, Mo.
Storey Bros., Milwaukee, Wis.
Toledo Stone and Glass Sand Co., Toledo, Ohio.
Ware, R. J., & Sons, Cincinnati, Ohio.

PROGRAMME FOR INVESTIGATION OF CONCRETE AND REINFORCED CONCRETE.

ORIGIN OF THE PLAN.

In October, 1904, the joint committee, in session at the Louisiana Purchase Exposition, St. Louis, Mo., adopted a programme of the tests necessary to procure the information desired in the preparation of a report on concrete and reinforced concrete, together with suggestions for putting the same into effect. The plan proposed that the subcommittee on tests should arrange for the cooperation of the joint committee with those schools of technology having adequate facilities for making the tests desired, and also arrange to supervise these tests so as to insure the proper accuracy and correlation of work. Materials of uniform and satisfactory quality were to be furnished to the different institutions, and methods of testing were to be outlined so as to standardize them as far as practicable. The inspection of the preparation of the test pieces and testing of the same by an experienced assistant was to be maintained, in order that the sources of error arising from the investigation of closely related problems at scattered laboratories might be reduced to a minimum. Funds to defray the cost of the material and the expense of efficient inspection were to be raised by a subcommittee on ways and means.

In response to an invitation issued by the subcommittee on tests in behalf of the joint committee, the following technical institutions expressed a willingness to cooperate in the work: Case School of Applied Science, Columbia University, Cornell University, Harvard University, Massachusetts Institute of Technology, Ohio State University, Purdue University, State University of Iowa, University of Illinois, University of Minnesota, University of Pennsylvania, and University of Wisconsin. The investigations assigned by the subcommittee on tests were conducted at these institutions during the same college year (1904–5) by advanced students or members of the instruction staff. Since arrangements for investigative work by students in nearly all such institutions necessitate the completion of any series of tests by at least the last of May of each year, the time available proved insufficient for making needed arrangements and providing materials sufficiently in advance to permit the completion of the requisite tests. This rendered impossible the thorough organization that was desired in the first year's work.

DETAILS OF THE PLAN.

I. EXAMINATION AND CLASSIFICATION OF CONSTITUENT MATERIALS.

A. *Examination of deposit.*—Sands, gravels, stones, gravel and stone screenings (¼-inch screen), slags, cinders, etc., are to be collected by a special representative of the testing laboratory sent out for that purpose. The deposit from which the samples are collected is to be examined to determine the extent and natur of the material.

B. *Physical tests in the laboratory.*—The laboratory tests are to include the examinations and determinations indicated below:

1. Mineralogical examination.
2. Specific gravity.
3. Weight per cubic foot.
4. Sifting (granulometric composition).
5. Percentage of silt and character of same.
6. Percentage of voids.
7. Character of stone as to percentage of absorption, porosity, permeability, compressive strength, and behavior under treatment.

C. *Chemical analysis.*—Analyses are to be made to determine the composition and character of the stone, silt, etc., used in tests.

II. TESTS AND CLASSIFICATION OF MORTARS MADE WITH TYPICAL PORTLAND CEMENT AND SAND, GRAVEL, AND STONE SCREENINGS (¼-INCH SCREEN).

A. *Proportions and conditions.*—Proportions to be stated by weight and volume. The unit of volume for cement is 100 pounds per cubic foot. The typical Portland cement is to be prepared by thoroughly mixing a number of brands, each of which must meet the following requirements:

Specific gravity, not less than 3.10.

Fineness, residue not more than 8 per cent on No. 100 nor 25 per cent on No. 200 sieve.

Time of setting: Initial set, not less than 30 minutes; hard set, not less than 1 hour nor more than 10 hours.

Tensile strength:

	Pounds.
1. Neat—	
24 hours in moist air	175
7 days (1 day in moist air, 6 days in water)	500
28 days (1 day in moist air, 27 days in water)	600
2. One part cement, three parts standard sand—	
7 days (1 day in moist air, 6 days in water)	175
28 days (1 day in moist air, 27 days in water)	250

Constancy of volume: Pats of neat cement 3 inches in diameter, one-half inch thick at center, tapering to a thin edge, shall be kept in moist air for a period of 24 hours. A pat is kept in air at normal temperature and observed at intervals for at least 28 days. Another pat is kept in water maintained as near 70° F. as practicable and observed at intervals for at least 28 days. A third pat is exposed in an atmosphere of steam above boiling water in a loosely closed vessel for 5 hours. These pats must remain firm and hard and show no signs of distortion, checking, cracking, or disfiguration.

The cement shall not contain more than 1.75 per cent anhydrous sulphuric acid nor more than 4 per cent magnesium oxide.

A test of the neat cement must be made with each mortar series for comparison of the quality of the typical Portland cement.

B. *Physical tests in laboratory.*—The laboratory tests include the following determinations, those designated as items 1 to 10 being each made at the ages of 7, 28, 90, 180, and 360 days:

1. Tensile strength with one part cement to varying percentages of material.
2. Compressive strength with one part cement to varying percentages of material.
3. Transverse strength with one part cement to varying percentages of material.
4. Shearing strength with one part cement to varying percentages of material.
5. Tensile strength with cement, material sifted to one size.
6. Compressive strength with cement, material sifted to one size.
7. Transverse strength with cement, material sifted to one size.

8. Shearing strength with cement, material sifted to one size.
9. Modulus of elasticity in compression of different mixtures as to proportion and size of aggregate.
10. Modulus of elasticity in tension of different mixtures as to proportion and size of aggregate.
11. Yield in mortar.
12. Porosity.
13. Permeability.
14. Volumetric changes in setting.
15. Absorption.
16. Methods of waterproofing.
17. Freezing tests.
18. Coefficient of expansion.
19. Effect of oil: (*a*) On hardening mortar; (*b*) on hardened mortar.
20. Effect of sea water.

III. TESTS AND CLASSIFICATION OF CONCRETE MADE WITH TYPICAL PORTLAND CEMENT AND STONE, STONE AND GRAVEL SCREENINGS, GRAVEL, SAND, CINDER, SLAG, ETC.

A. *Proportions and conditions.*—Proportions to be stated by weight and volume. Unit of volume for cement, 100 pounds per cubic foot.

B. *Physical tests in laboratory.*—The laboratory tests include the following determinations, those designated as items 1 to 6 being each made at the ages of 30, 90, 180, and 360 days:

1. Tensile strength with different mixtures as to proportion and size of the aggregate.
2. Compressive strength of different mixtures as to proportion and size of aggregate.
3. Transverse strength of different mixtures as to proportion and size of aggregate.
4. Shearing strength with different mixtures as to proportion and size of aggregate.
5. Modulus of elasticity in compression of different mixtures as to proportion and size of aggregate.
6. Modulus of elasticity in tension of different mixtures as to proportion and size of aggregate.
7. Character of crushed stone used: (*a*) Weight per cubic foot; (*b*) size; (*c*) percentage of voids; (*d*) percentage of silt.
8. Weight per cubic foot, uncrushed.
9. Yield.
10. Absorption.
11. Porosity.
12. Permeability.
13. Methods of waterproofing.
14. Protective influence against corrosion of metal.
15. Fire-resisting qualities: (*a*) Effect of heat on hardening concrete; (*b*) effect of heat on hardened concrete; (*c*) thickness necessary for proper insulation.
16. Freezing tests.
17. Volumetric changes.
18. Effect of vibration and of applied stress (impact): (*a*) On hardening of plain and reinforced concrete; (*b*) on hardened plain and reinforced concrete.
19. Adhesion of concrete to metal under varying conditions, for varying periods, up to at least three years: (*a*) Effect of shape; (*b*) effect of embedded length; (*c*) effect of various kinds of loading; (*d*) effect of chemical action; (*e*) relative value of surface adhesive resistance and grip.
20. Effect of oils: (*a*) On hardening concrete; (*b*) on hardened concrete.
21. Coefficient of expansion.
22. Effect of sea water.

C. *Full-size tests.*—The laboratory tests of full-size beams, building blocks, and bricks include the following:

1. Beams of various spans, sections, and compositions.

2. Building blocks and bricks, as to (*a*) compressive strength, wet and dry mixtures; (*b*) transverse strength, wet and dry mixtures; (*c*) shearing strength, wet and dry mixtures; (*d*) absorption, wet and dry mixtures; (*e*) permeability; (*f*) methods of waterproofing; (*g*) effect of accelerating the hardening of concrete blocks by means of live steam, etc.; (*h*) fire-resisting qualities; (*i*) efflorescence.

IV. TESTS OF REINFORCED CONCRETE.

A. *Beams.*—Tests of beams to include determinations of—

1. Effect of amount of reinforcement.
2. Effect of character of reinforcement.
3. Effect of form, size, and position of reinforcing bars.
4. Effect of initial stress in reinforcement.
5. Effect of different manners of loading.
6. Methods of providing for diagonal stresses.
7. Effect of variation in section, such as trapezoidal, T-shaped, etc.
8. Effect of variation in length and depth.
9. Effect of restraining the ends.
10. Effect of repetitive loading.

B. *Columns.*—Tests of columns to include determinations of—

1. Effect of amount of reinforcement.
2. Effect of disposition of reinforcement: (*a*) Longitudinal; (*b*) hooped; (*c*) combination of (*a*) and (*b*).
3. Effect of form, size, and position of reinforcement.
4. Effect of character and eccentricity of loading.
5. Effect of variation in section, such as square, round, and rectangular.
6. Effect of fixing the ends.

C. *Slabs.*—Tests to be made of slabs—

1. Supported at two or four edges.
2. Fixed at two or four edges.
3. Use of expanded metal, wires, etc.
4. Effect of concentration of load.
5. Variation in per cent of reinforcement.
6. Variation in span and thickness.

D. *Arches.*—Tests to be made of forms and features of arches as follows:

1. Continuous ring.
2. Hinged.
3. Voussoirs.
4. Shape.
5. Span and rise.

WORK AT TECHNOLOGICAL INSTITUTIONS.

In connection with the work at the laboratories it has been deemed desirable by the national advisory board and the joint committee on concrete and reinforced concrete to invite the cooperation of those technological institutions possessing proper facilities for carrying on investigations comprising, in part, tests in which the methods of execution are still open to formulation and which involve general phenomena. In addition to this, it was thought desirable for this laboratory to act in an advisory capacity to any laboratory desiring to conduct investigations along these lines. Among the topics which are available for such investigations may be mentioned—

1. Shearing: Comparison of methods.
2. Modulus of elasticity: Comparison of methods.
3. Protective influence of concrete against corrosion.
4. Fire-resisting qualities of concrete.
5. Methods of waterproofing.
6. Coefficient of expansion.

7. Effect of vibration and applied stress.
8. Adhesion of concrete to metal.
9. Reinforced-concrete beams: (*a*) Effect of different manners of loading; (*b*) methods of providing for diagonal stresses; (*c*) effect of variation in section; (*d*) effect of restraining ends; (*e*) amount and character of reinforcement.
10. Reinforced-concrete columns: Method of testing.

SEQUENCE OF TESTS.

It is evident that the investigations embraced in the foregoing programme will cover a number of years, and it is therefore the aim of the United States Geological Survey to investigate first those questions which will yield information most urgently needed in constructive work by the different branches of the Government, the policy being to work continuously upon as many of the problems as the facilities and appropriation will permit.

As the investigation progresses it may be found necessary to do considerable experimental work in determining the proper methods to be followed, the sources of error to be guarded against, and the probable causes of given phenomena, and the programme may therefore be varied according to conditions.

SUMMARY.

In the following pages the character of the investigations being conducted at the laboratories is presented, together with a description of the apparatus and methods of testing, methods of computing, and forms used for recording the results, the work of each section being separately described.

The methods of testing are given in some detail without, however, any reference to the investigations which led up to their adoption. These investigations often entailed a series of comparative tests between a number of different methods. No change of method is made without a thorough series of tests on identical material by both the old and the proposed method, not only to determine the relative advantages and disadvantages of the two methods, but also to have an equation between the results obtained by both methods by which, should the new method be adopted, the results obtained by the old method would be comparable with those obtained by the new.

The theories underlying the methods of testing are not touched upon except in one instance. The methods used in testing beams are somewhat different from those used by other investigators, hence the theories underlying the methods used at these laboratories are explained.

The methods used in transforming the data obtained at the testing machines into form for publication are not treated in detail, an outline[a] only being given.

[a] See Form B (p. 24) and footnote relating thereto (p. 23).

A

B

INTERIOR VIEWS OF CONSTITUENT-MATERIALS LABORATORY.

It is the policy to present only the results of the tests, eliminating all statements of opinion or theories concerning them. Occasionally in bulletins on a particular phase of a subject curves will be drawn showing graphically certain relations, such as the variation of strength with age or the variation of deformation with increasing stress. Attention will also be called to points of interest or some unusual feature in the results.

CONSTITUENT-MATERIALS SECTION.

OUTLINE OF INVESTIGATIONS.

Nature of the work.—All the sand, stone, gravel, and other materials which are used in the investigations being carried on by the division are tested for their quality in this section.

In addition a series of investigations are under way covering the determination of the relative value of the various sands, gravels, cinders, crushed stone, and other constituent materials used in cement mortars and concretes.

For these investigations there is used a typical Portland cement, obtained by thoroughly intermixing a large number of standard brands of Portland cement. In the earlier stages of these investigations, it was the practice to test each brand separately, and also each mixture of these brands. It was found that the difference between the result obtained for the mixture and the average of the results of the individual brands was so slight as to be negligible for all practical purposes. It is the practice now, however, to test the various brands in order to ascertain whether the cement meets the requirements for a typical cement contained in the programme for these investigations (p. 17). The cement obtained by mixing several brands, here referred to as a typical cement, is mixed in large quantities at a time and sealed in air-tight galvanized cans of about 800 pounds capacity.

Laboratories.—Interior views of the constituent-materials laboratories are shown in Pl. II. A briquet is shown in the clips of the long-lever testing machine at the left in *A*, and the soapstone immersion tanks are shown in the background. The glass-top mixing tables are shown in the foreground of *B*. This view also shows the 200,000-pound Olsen testing machine at the left, the long-lever cement-testing machine and the hydraulic hand-operated compression-testing machine in the center, and the moist closet at the right.

Register numbers.—Each sample of material as it is received at the laboratories is given a register number, a record of which is made and filed in a card index. The sample is subsequently known by this register number, which is so chosen that it indicates the nature of the material. For example, each material is designated

by the first and last letters of its name; thus, Ct. for cement, Sd. for sand, Gl. for gravel, Cr. for cinder, Sg. for slag, and Se. for stone. The first sample of the cement was called Ct. 1, the next Ct. 2, etc. When the mix is made it is given a single number and each sample taken from that mix is given a subsequent number; thus the second mix was called Ct. 133, and the first sample from that mix Ct. 133–1, etc.

PHYSICAL TESTS OF CEMENT.

All the cement used at the laboratories is subjected to the following physical tests: (1) Specific gravity. (2) Fineness. (3) Time of setting. (4) Tensile, compressive, and transverse strength, neat and with three parts Ottawa sand. (5) Percentage of water for normal consistency. (6) Soundness.

The methods recommended by the special committee on uniform tests of cement of the American Society of Civil Engineers are used in making these tests.

The specific gravity is determined upon untreated, dried, and ignited samples. A large series of special tests have been made to determine the relative merits of the different forms of apparatus; the Le Chatelier apparatus, however, is the standard for routine work.

The time of both initial and hard set is determined both by means of the Gilmore wires and by the Vicat needle apparatus. The latter apparatus, however, is the standard for all tests. The temperatures of the air and of the water are recorded on Draper automatic recording thermometers, which record covers a period of one week.

The accelerated testing apparatus for making tests for soundness is illustrated in Pl. III, *B*. The test consists in maintaining the pats in an atmosphere of steam over boiling water for five hours.

The percentage of water for normal consistency is determined with the Vicat needle apparatus. The test for fineness is made by sifting the cement through the No. 100 and No. 200 sieves, using a special sifting apparatus made by Howard & Morse, which is capable of holding nine sieves at one time.

STRENGTH TESTS OF NEAT CEMENT AND OTTAWA SAND MORTAR.

The neat cement is tested for tensile, compressive, and transverse strength at ages of 1, 7, 28, 90, 180, and 360 days, and a parallel series of tests is made of 1:3 mortar, using standard Ottawa sand for all ages except one day. Three test pieces are broken for each age.

Tension briquets are approximately 1 inch square at the smallest section; in order to get accurate results the least dimensions are carefully measured at the time of testing and the actual unit stress

A. 40,000-POUND HYDRAULIC HAND-POWER COMPRESSION MACHINE.

(See explanation in text, p. 30.)

B. ACCELERATED TEST APPARATUS FOR SOUNDNESS TESTS OF CEMENT.

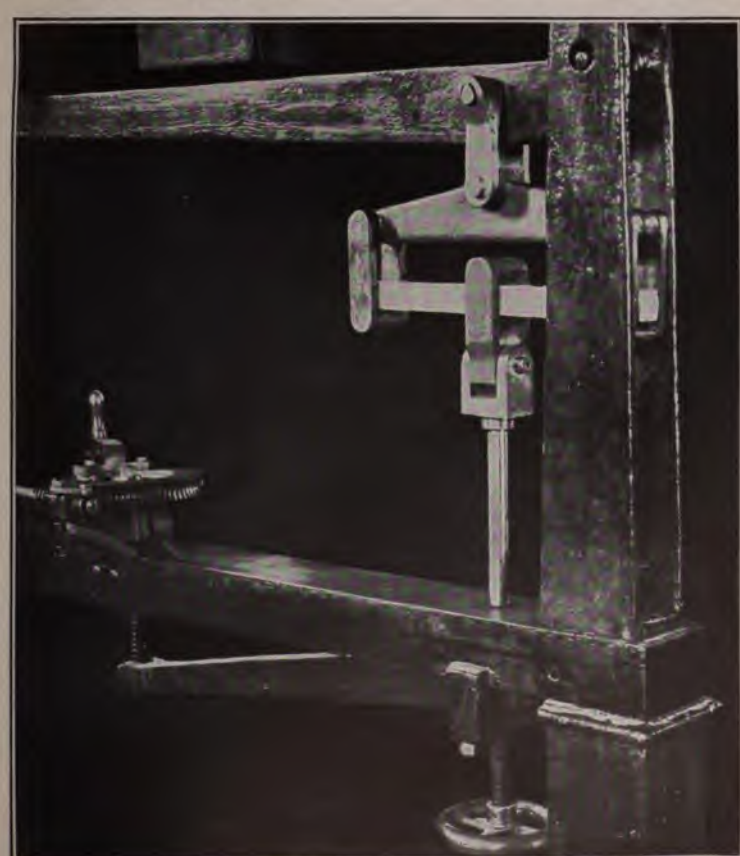

C. ATTACHMENT FOR TESTING SHORT TRANSVERSE TEST PIECES ON OLSEN LONG-LEVER CEMENT-TESTING MACHINE.

is computed. The briquet molds are of the 5- and 3-gang type and are made of brass (Pl. II, *A*).

Compression test pieces are 2-inch cubes, the molds being of the 3-gang type. The mortar cubes are tested in the 40,000-pound hydraulic hand-operated compression machine shown in Pl. III, *A*, in which *a* is a ball-and-socket bearing and *b* and *c* are handles that give fast and slow motions, respectively. A cube is shown in the machine just above *a*. The stronger neat cubes are tested in the 200,000-pound testing machine.

Transverse test pieces are 1 inch square in cross section and 13 inches in length; they are tested on a span of 12 inches. The transverse molds are of the individual type. The transverse specimens are usually tested on the machine shown at the left of the center in Pl. II, *A*, but can be tested in the briquet machine by means of the apparatus illustrated in Pl. III, *C*.

The test pieces are stored in the moist closet for twenty-four hours, and are then placed under water, in the immersion tanks, until tested. The water in the immersion tanks is kept constantly running and heated when necessary in order to maintain a constant temperature of about 70° F.

The order of testing is regulated by a filing system with cards 6 by 4 inches in size which have blanks for data, as shown in Form A.

Form A. { UNITED STATES GEOLOGICAL SURVEY. STRUCTURAL-MATERIALS TESTING LABORATORIES. } MOLDING CARD.

Date ..... Test ..... Reg. No..... Field No. .....
Mold test pieces as follows:
Neat with .....per cent: mark, ... 1:4 with .....per cent; mark, ...B....
1:3 with.....per cent; mark, ...A.... 1:3 one size...per cent; mark, ...C....
Take all temperatures and date neat test pieces.
Temperatures: Tanks.....°F.; moist closet, ...°F.; air in lab. .....°F.; mixing water, ...°F.
Remarks.—.....
Operator's signature: ..... Approved: .....

When a sample of neat cement, for example, is molded into test pieces, a card is made out for each group of three, and the date upon which the group will be tested is placed at the top of the card. The cards are then filed in the order of the dates. Calendar guide cards are used, dividing the months into three parts. Each morning the cards bearing the date of that day are removed from the front of the file, and the test pieces indicated on them are tested that day. In this way the cards are kept moving toward the front of the file and reach the front on the day when the test pieces whose register numbers they bear are to be tested.

The results of these physical determinations are entered upon Form B[a] for filing at the laboratory, and are subsequently copied into tables for publication.

[a] Forms B to R, inclusive, are condensed in the pages of this bulletin, in connection with the subject-matter to which they severally relate, for the purpose of showing in detail how the results of the various tests are recorded. In practice, each form is printed on a sheet of paper 8 by 10½ inches in size.

Form B. { UNITED STATES GEOLOGICAL SURVEY. STRUCTURAL-MATERIALS TESTING LABORATORIES. } CEMENT REPORT.

Station..... Approved.....
Register No..... Brand..... Sp. gr.....
Residue on No. 100 sieve.....per cent; on No. 200 sieve..... ..per cent.
Time initial set.....hr.,.....min. Hard set.....hr.,.....min. Method.....
Pat test in air, 70° F .....
Pat test in water, 70° F.....
Pat test in steam, 5 hours.....
Pat test in water, 180° F.....
Water used: Neat.....per cent; 1:3.....per cent. Kind of sand used in 1:3.....

Temperature at mixing. Neat: Tension—water.....° F.; air.....° F. Compression—water.....° F.; air.... ° F.
Neat: Flexure—water.....° F.; air.....° F. Pats—water.....° F.; air.....° F.
1:3: Tension—water.....° F.; air.....° F. Compression—water.....° F.; air.....° F.
1:3: Flexure—water.....° F.; air.....° F.

	Age (days).	Tensile strength.		Compressive strength.		Transverse strength.		
		Pounds per square inch.	Av.	Pounds per square inch.	Av.	Center load in pounds.	Av.	Mod.
Neat	1							
	7							
	28							
	90							
	180							
	360							
1:3	7							
	28							
	90							
	180							
	360							

Remarks. .....

SAND, STONE, GRAVEL, AND OTHER AGGREGATES.

PHYSICAL TESTS MADE.

Samples of sand, stone, gravel, cinders, etc., are collected by a geologist who makes a complete report on the location, extent, and geological formation of the source of the supply, the methods of preparing the material for the market, the market supplied, the output, etc. In the case of broken stone and gravel he collects samples of crusher or pit-run screenings below one-fourth inch, and pieces of stone about 1 cubic foot in size. The physical tests made upon this material are as follows:

Percentage of voids; percentage of moisture; weight per cubic foot; percentage of absorption; specific gravity; percentage of silt; granulometric analysis; strength and density tests of mortar; strength, modulus of elasticity in compression, and density tests of concrete.

PERCENTAGE OF VOIDS.

Apparatus.—The apparatus shown in Pl. V, *A*, consists of a heavy galvanized-iron cylinder 12 inches in diameter and 15 inches high, inside dimensions. The pipe *a* admits water through four 1-inch apertures in the bottom of the vessel, the inlets being fitted on the inside with perforated porcelain disks which prevent fine material

A. METHOD OF HANDLING VOID APPARATUS.

B. HOPPER FOR FILLING VOID APPARATUS.

A. APPARATUS FOR DETERMINING PERCENTAGE OF VOIDS.

(See explanation in text, pp. 24–25.)

B. APPARATUS AND CONNECTIONS FOR MAKING VOID TEST ON "ONE-SIZE" MATERIAL.

placed in the vessel from dropping down into the pipe. The pipe *b* is connected by a rubber hose to a 5-gallon water bottle. The lid *c* is of cast iron and is ground to an air-tight fit. The small cock *d* is connected by a rubber tube to a Richards air pump (shown at *d*, Pl. IV, *B*, and at *b*, Pl. VI, *A*), which is attached to a water faucet. Pl. IV, *B*, shows the apparatus for filling the cylinder, with the water bottle, the air pump *d*, and the scales in place. The material is placed in the hopper *a* and runs through the opening at *b* into the cylinder *c*.

Method.—A sample of the material is dried to constant weight, thus incidentally obtaining the percentage of moisture contained in the material as received. The dry material is placed in the hopper (*a*, Pl. IV, *B*), which is raised so that its bottom is 24 inches above the center of the cylinder. The aperture *b* is opened to such an extent that the material will fill the cylinder in about one minute. The material is allowed to fill the cylinder to overflowing and is struck off level with a straightedge. The cylinder is then transferred to the scales by means of the overhead trolley (Pl. IV, *A*) and its weight with contents is ascertained and recorded. The tube from the water bottle is next attached to the pipe beneath the cylinder and the tube from the pump is attached to the valve in the lid, which is carefully put in place. The air is exhausted from the cylinder by means of the air pump (*d*, Pl. IV, *B*), and the water is allowed to flow in slowly from below until it approaches the top, when the cover is removed and the water brought to the top of the vessel. The water is allowed to flow into the voids at such a rate that it reaches the top in about one hour. The weight of the vessel is taken after the voids are filled with water.

The percentage of voids in the large material and in the screenings and sand is determined in the same way except that a smaller cylinder is used for the material sifted to one size. This cylinder has only one hole in the bottom for the introduction of the water. The smaller cylinder is used because the material of a given size is often insufficient to fill the larger one (shown in Pl. V, *A*). Pl. V, *B*, shows the test on large-sized material under way.

Computations.—The volume and weight of the vessel and the weight of water required to fill the pipes beneath the vessel are known. The quantities measured and recorded during the tests are (1) the weight of the vessel full of dry material, (2) the weight of the vessel full of material and water, (3) the weight of a portion of the surface-dried sand after the test, and (4) the weight of the thoroughly dried sand after the test.

The percentage of voids is obtained by correcting the measured volume of water for that filling the pipes and absorbed by the material, dividing by the volume of the vessel and multiplying the result by 100.

The percentage of voids is also obtained by dividing the weight per cubic foot of the dried sample by the product of the specific gravity of this material and the weight of a cubic foot of water.

PERCENTAGE OF MOISTURE.

Method.—The weight of water introduced into the cylinder is corrected for the absorption of water by the stone, which is determined by weighing a portion of the material after surface drying and again after thoroughly drying it over a hot plate.

Computations.—The percentage of moisture is found by dividing the difference in weight between an ordinary sample before and after drying by the weight of the dry material and multiplying by 100.

WEIGHT PER CUBIC FOOT.

The weight per cubic foot of the material is found by taking the difference between the weight of the empty vessel and the weight of the vessel full of dry material and dividing by the volume of the vessel.

PERCENTAGE OF ABSORPTION.

Method.—The sample used for the absorption test, taken from the material in the void apparatus, is obtained by spreading the material out and selecting small portions from several different parts of the mass.

Computations.—The unit absorption, or the weight in pounds of water absorbed per pound of dry material, is the difference between the weight of the surface-dried material after the test and of the thoroughly dried material divided by the weight of the thoroughly dried material.

SPECIFIC GRAVITY.

METHOD USED WITH LARGE MATERIAL.

Apparatus.—Pl. VI, *C*, shows the apparatus used in determining the specific gravity of large material. The cylinder (*a*) is the same as that used for making the void test on "one-size" material. It is made from an 8-inch wrought-iron pipe 8½ inches long; the cap at the bottom has a 1-inch opening in the center fitted with pipe and valve (shown at *b*) and is protected from the materials placed in the cylinder by a No. 50 wire-gauze screen. This pipe is connected by rubber tubing to an aspirator bottle containing clean water. The valve in the lid is connected to the Richards air pump (shown at *c*). The lid is of cast iron and is grooved to fit the top of the cylinder. A rubber gasket is placed in the groove, making an air-tight joint. The tin vessel (*d*) is arranged to hang from the arm of the balance (*e*), so that its weight may be determined when it is immersed in water.

A. APPARATUS AND CONNECTIONS FOR DETERMINING SPECIFIC GRAVITY OF SAND AND SCREENINGS.

(See explanation in text, pp. 25, 27.)

B. APPARATUS FOR REMOVING SILT FROM STONE SCREENINGS.

(See explanation in text, p. 28.)

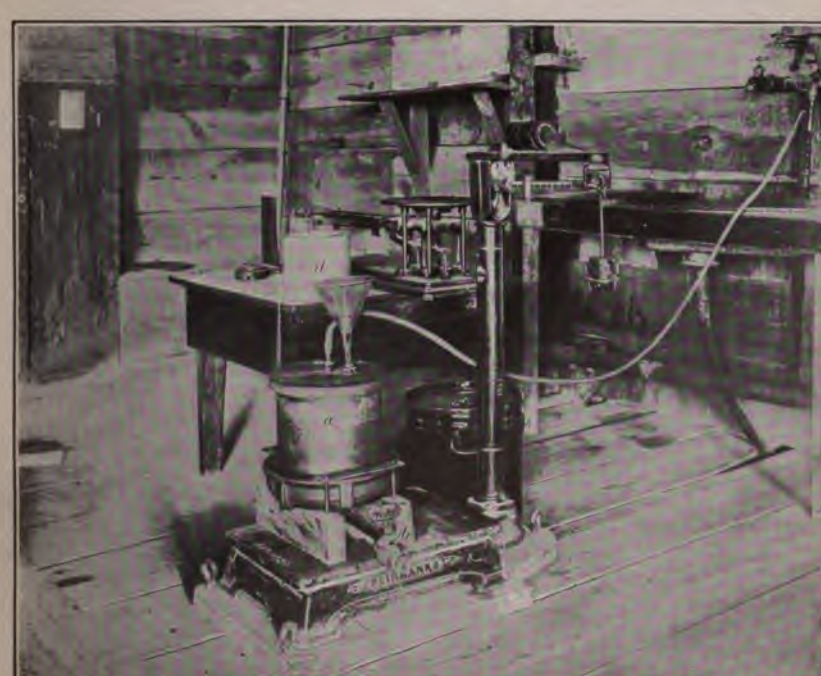

C. APPARATUS AND CONNECTIONS FOR DETERMINING SPECIFIC GRAVITY OF LARGE MATERIAL.

(See explanation in text, p. 26.)

Method.—A 1,500-gram sample, dried to constant weight, is placed in the tin bucket, which is then placed in the iron cylinder; the cast-iron lid is put in place and the air exhausted. The water is then slowly admitted until the stone is covered, when the lid is removed. The stone is allowed to soak for one-half hour (the average time of the immersion of material in the void test); the bucket is removed and hung on the arm of the balance (*e*), so that it is immersed in the water contained in the vessel (*f*), and the weight of the immersed tin bucket and contained material is measured.

The amount of water absorbed is measured by weighing the material after surface drying with a towel and again after drying it to constant weight over a hot plate. The original dry weight is used in determining the loss of weight in water and the final dry weight in determining the unit absorption. The original dry weight is used because small particles are apt to be lost during the surface drying.

Computations.—The quantities measured and recorded are (1) the weight of the original dry stone, (2) the weight of the stone and tin vessel suspended in air and (3) in water, (4) the weight of the surface-dried stone after the test, and (5) the weight of the thoroughly dried stone after the test. All these weights are in grams. The difference between the last two weights gives the weight of water absorbed, and the weight of the original dry stone divided by the loss of weight of the stone in water corrected for absorption gives the specific gravity.

METHOD USED WITH MATERIAL THAT PASSES THE ONE-FOURTH INCH SCREEN.

Apparatus.—With screened material a 3-inch wrought-iron pipe, 12 inches long, shown in Pl. VI, *A*, is used. It is permanently capped at the bottom and has a removable screw cap at the top. The valve at *a* is connected with the air pump, and water is admitted through the funnel and the stopcock in the top. A glass flask with a long neck graduated to one-fifth of a cubic centimeter is used to hold the material. The Le Chatelier specific-gravity bottle (Pl. VI, *A*) may be used.

Method.—About 55 grams of the material, dried to constant weight, is put in the flask and weighed. The flask is then placed in the cylinder and the air exhausted, after which water is admitted to the flask through the funnel. The vacuum prevents foaming when limestone is used and also approximates the condition under which the voids are measured. When the material is entirely covered with water, the flask is removed from the cylinder and allowed to stand one-half hour. Its weight is then taken and the volume read on the neck of the flask. Owing to the delicacy of this test the temperatures of air and water must be controlled. The amount of

water absorbed is determined by weighing the material after surface drying with blotters and filter paper, and again when dry.

Computations.—The weight in grams of the flask is known and the following quantities are measured and recorded, the weights being in grams and the volumes in cubic centimeters: (1) Weight of flask and sand; (2) weight of flask, sand, and water; (3) weight of surface-dried sand; (4) weight of dry sand; (5) volume of sand and water, read on the neck of the flask.

From these data the original weight in grams of the dry sand, the weight in grams of water absorbed per gram of dry sand, and the total weight in grams of water absorbed are computed. The difference between the volume of the sand and water read on the neck of the flask and the volume of the water in cubic centimeters in the flask corrected for absorption gives the volume of the sand in cubic centimeters. Finally, the ratio between the weight in grams and the volume in cubic centimeters of the dry sand gives the specific gravity.

PERCENTAGE OF SILT.

Apparatus.—The apparatus used in this determination is shown in Pl. VI, *B*. The glass percolator (*a*) is 13 inches long, with an upper inside diameter of 3 inches and a lower inside diameter of 2½ inches. The vessel (*b*) is placed with its outlet (*c*) 3 feet above the top of the percolator. The opening (*d*) at the bottom of the percolator is one-half inch in diameter, and is fitted with a perforated porcelain disk to prevent the passage of the material placed in the vessel. The glass tube (*e*) is placed with its lower end 10 inches above the surface of the material.

Method.—The vessel (*b*) and the percolator (*a*) are filled with clean water, and a 100- to 200-gram sample, depending upon the probable amount of silt present, is put in the latter. The upper stopper of the percolator is put in place, and the current of water is started. The silt is carried by the current of water over into the vessel *f*. The flow of water is continued until the effluent is clear, when the upper stopper is removed, the material stirred, and the current again started. This operation is repeated until the effluent is clear immediately after the material is stirred. The water containing the silt is evaporated on a water bath, when the silt is scraped and brushed onto a watch glass and permitted to remain uncovered until it attains the temperature of the room so that it will be under the same conditions as the original sample. It is then weighed. The silt thus obtained is chemically analyzed.

Computations.—The percentage of silt is the weight of the silt divided by the weight of the material placed in the percolator and multiplied by 100.

A. BUMPING SCREEN FOR MAKING GRANULOMETRIC ANALYSIS.

(See explanation in text, p. 29.)

B. METHOD OF FILLING ONE SCREEN WITH MATERIAL RETAINED ON ANOTHER.

GRANULOMETRIC ANALYSIS.

Apparatus.—Two sets of screens are used for the granulometric analysis; one for material larger than one-fourth inch and one for smaller material. The set of large-mesh screens (openings ¼, ½, ¾, 1, 1¼, 1½, 1¾, and 2 inches) are 2 feet wide, 4 feet long, and 6 inches deep, and are provided with hooks at the corners by which they may be suspended by ropes passing through pulleys at the ceiling (Pl. VII). A shallow wooden box (*a*, Pl. VII, *A*) fits beneath each of the two finest screens so that material passing these screens will be caught in the box with the loss of as little fine material as possible. When the material has been placed upon the screen, the latter is raised to a convenient height by means of the ropes and is repeatedly pulled out about 18 inches from the post at *b* and released, so as to bump against the post. The impact violently jars the screen and aids the material in passing through.

The set of smaller-mesh screens (openings 10, 20, 30, 40, 50, 80, 100, and 200 to the linear inch) are brass circular hand sieves, 8 inches in diameter, and fit one upon another, each set being provided with a cover and a bottom pan. A Howard & Morse power sifter is used, which gives the nest of sieves a rotary motion, violently reversed after a part revolution, and at the same time a vertical bumping motion.

Method.—A 100-pound sample is dried to such a degree that it will not clog the screens. It is placed upon the ¼-inch screen and the material passing is reserved. That portion remaining on the screen is then run onto the screen of next larger mesh (Pl. VII, *B*) and the operation repeated. Each sifting is continued until the material ceases to pass through the sieve. The material passing each screen is weighed. A 500-gram sample is then taken from the material that passes the ¼-inch screen and is placed upon the upper of the nest of small sieves and sifted for fifteen minutes, when the residue on each sieve and the material passing the No. 200 sieve are weighed.

Computations.—The percentages recorded represent the residues on each of the fine and the coarse sieves, and are given in terms of the weight of the original sample.

TESTS OF MORTAR.

DESCRIPTION.

The sand and screenings received at the laboratories are made into mortar, using different proportions and sizes of material. This mortar is then investigated as to tensile, compressive, and transverse strength, and as to density. Should the material contain particles larger than one-fourth inch, these are removed by the use of a ¼-inch screen. The

mortars are made with one part typical Portland cement in proportions of 1:3 and 1:4, and in addition a 1:3 mortar is made from sand screened to one size between Nos. 30 and 40 sieves and from stone screenings sifted to one size between Nos. 10 and 20 sieves. These mortars are molded into tensile briquets, 2-inch cubes, and transverse test pieces of 1-inch cross section 13 inches long.

STRENGTH TESTS.

Apparatus.—An improved Fairbanks shot machine is used for the tension tests, and a 40,000-pound capacity oil-pressure hand-operated machine, shown in Pl. III, *A* (p. 22), is used for the compression tests. The transverse tests are made either on the 10,000-pound wire tester, which is fitted with transverse tools, or on a long-lever 2,000-pound Tinius Olsen & Co. machine with a special bearing made by the same company, as shown in Pl. III, *C*. When transverse specimens are being tested, the heavy counterpoise is replaced by a light wooden one loaded with shot. This requires a greater movement of the poise to balance the same load, and thus permits the small loads sustained by the beams to be more accurately measured than with the original counterpoise.

Methods.—The methods recommended by the special committee on uniform methods of the American Society of Civil Engineers are used in the mixing and molding. The test pieces are placed in the testing machine upon their sides (with reference to the position in which they are molded).

Computations.—The only computations necessary are those for obtaining the unit strengths from the gross loads read at the machine and the averages of the three tests in each case.

DENSITY TESTS.

Apparatus.—The implements used in the density tests are shown in Pl. VIII, *A*. Two sizes of molds are used in order to determine which size gives the more uniform results. After this has been decided, it is proposed to abandon the one giving the less consistent results. The molds are sections of wrought-iron pipe capped at one end. One is 3½ inches in diameter and 4½ inches deep, while the other is 4½ inches in diameter and 5½ inches deep, inside dimensions. The diameter of the tamper head is one-half the diameter of the cylinder in each case, so that when the tamper is moved around the inner circumference of the cylinder and kept in contact with the mold the entire surface of the mortar in the cylinder will be tamped. The table top is of slate.

Method.—The required proportions of the dry material are carefully weighed out, and water is added to form a normal consistency. The

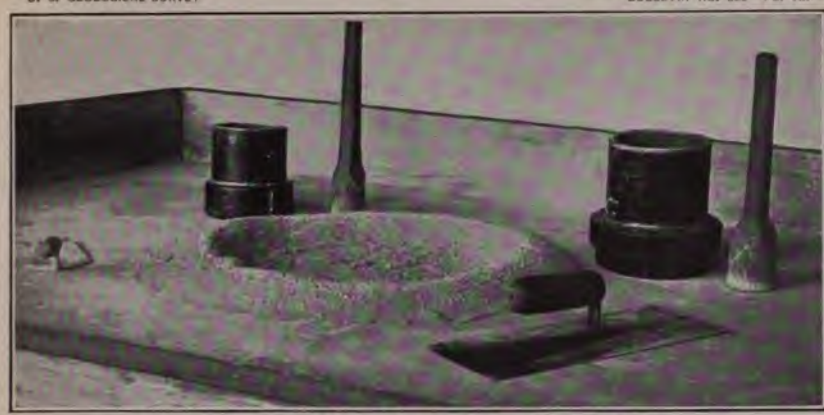

A. IMPLEMENTS USED IN MAKING DENSITY TESTS OF MORTARS.

B. CAST-IRON CUBE AND CYLINDER MOLDS.

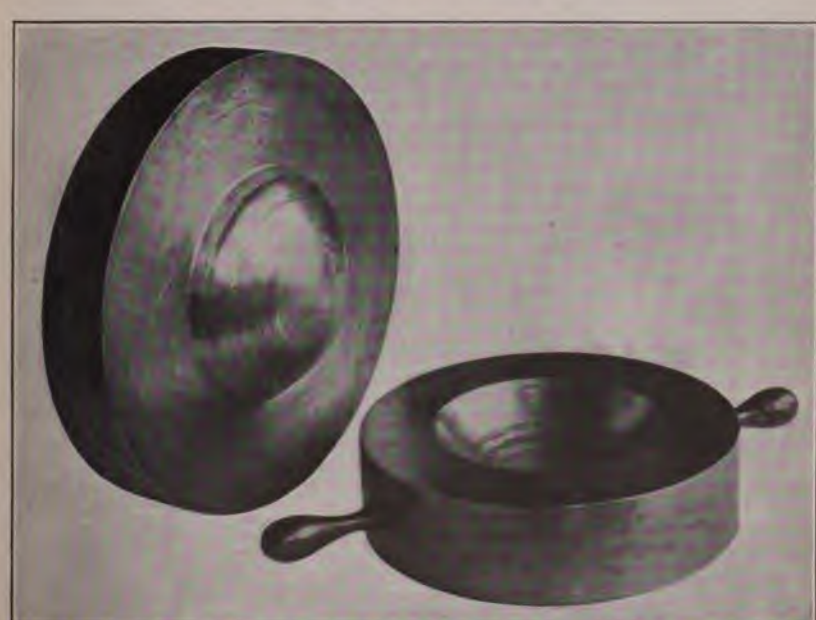

C. SPHERICAL BEARING BLOCKS FOR COMPRESSION TESTS.

mixing is continued for two minutes and the mortar placed in the molds in layers about 1 inch thick and thoroughly and uniformly tamped. The top surface is troweled off even with the top of the mold and allowed to stand one-half hour. The weight of the full mold is then taken. The amount of shrinkage of the mortar from the top of the mold is measured by a steel rule.

Computations.—The weight of each ingredient in the mixture multiplied by the ratio of the weight of the mortar in the mold to the total weight of the mixture gives the weight of the cement and sand entering the cylinder. The absolute volume of the sand and cement in the molds is computed by dividing their weights in grams by the respective specific gravities. The sum of these absolute volumes is then divided by the volume of mortar in the cylinder, and thus the density obtained.

The values are recorded on Form C.

Form C. { UNITED STATES GEOLOGICAL SURVEY. STRUCTURAL-MATERIALS TESTING LABORATORIES. } MORTAR REPORT.

Station..... Approved: .....

Sand reg. No..... Cement reg. No. ..... For parallel cement tests, see Cement report on.....

..... sand passed through No. ..... sieve and retained on No. ..... sieve.

Proportions of mortar by weight, ...; by volume,..... Water used .....per cent.

Temperature at mixing. { Tension- water.....° F.; air.....° F. Compression—water.....° F.; air.....° F. Flexure -water.....° F.; air.....° F. Shear—water.....° F.; air.....° F.

Age (days).	Tensile strength. Pounds per square inch.	Av.	Compressive strength. Pounds per square inch.	Av.
7				
28				
90				
180				
360				

Age (days).	Transverse strength. Total center load in pounds.	Av.	Mod.	Shearing strength. Pounds per square inch.	Av.
7					
28					
90					
180					
360					

Remarks. .....

TESTS OF CONCRETE.

DESCRIPTION.

The large material, crusher-run stone, pit-run gravel, etc., is made into concrete with typical Portland cement, using different proportions, and the concrete investigated as to its compressive strength, its modulus of elasticity, and its density.

The large material, first, has all the ¼-inch material screened out and is then made into the following concretes:

(1) Using Meramec River sand in proportions of 1:3:6, 1:2:4 in such amounts that the cement is 10 per cent in excess of the amount required to fill the voids in the sand and the mortar 10 per cent in excess of the amount required to fill the voids in the stone, and in proportions which will produce the greatest density as determined by the yield test, when the cement is first one-ninth and second one-sixth of the total aggregate. Meramec sand is a bar sand of excellent and uniform quality, donated by a company operating on the Meramec River near St. Louis, Mo.

(2) Using the ¼-inch screenings in place of the sand in proportions of 1:3:6, 1:2:4, and in the proportion producing the maximum densities, as with the Meramec sand. The concrete is mixed in a one-half cubic yard Chicago cube mixer. This mixer is equipped with a charging hopper and a direct-connected motor. Water is supplied from a barrel which rests on a platform scale, so that the amount of water used may be weighed. The barrel is fed from a faucet and discharges through a quick-closing faucet into a large funnel. The water passes from the funnel to the mixer through a 2-inch hose. The concrete is molded into cylinders 8 inches in diameter and 16 inches long and into 6-inch cubes. Both cylinders and cubes are tested for compressive strength, and on the cylinders the modulus of elasticity is also determined. The cubes and cylinders are tested at 28, 90, 180, and 360 days, three similar pieces being tested at each age.

STRENGTH TESTS.

Apparatus.—The cube and cylinder molds are shown in Pl. VIII, *B*. They are of cast iron, with the inner surfaces machined. The clamp screws are of brass. In testing the cylinders and cubes, a 12-inch spherical bearing block (shown in Pl. VIII, *C*) is used to give a uniform distribution of the load.

Method.—(a) Molding: The concrete is made of medium consistency (see description of consistencies under "Beam section," pp. 49–50), and the tamping is done by hand in 3-inch layers, using tampers 3½ by 1¼ inches at the ends and weighing 12½ pounds each. The greatest care is exercised to insure the uniform tamping of all test pieces. The cylinders and cubes are permitted to remain in the molds for twenty-four hours; then they are placed in a moist room. This room is lined with waterproof paper, and either steam or water may be sprayed into the air from a number of spraying nozzles at the ceiling. The specimens are sprinkled with water at regular eight-hour intervals. (b) Testing: The cubes are centered in the testing machine on a spherical bearing block and bedded top and bottom with asbestos

A. TYPICAL FAILURE OF CONCRETE CYLINDER.

B. FAILURE OF CONCRETE CYLINDER—RUPTURE THROUGH AGGREGATE.

C. COMPRESSOMETERS FOR MEASURING DEFORMATIONS OF CYLINDERS.

D. TYPICAL CONES FORMED BY RUPTURE OF CONCRETE CYLINDERS.

board one-eighth inch thick (Pl. X, *A*, p. 48). The testing of the cylinders is described under the next heading.

MODULUS OF ELASTICITY IN COMPRESSION.

Apparatus.—The compressometer used in measuring the vertical deformations of the cylinders during testing is shown in Pl. IX, *C*. The gage length is exactly 12 inches. The micrometers measure to one ten-thousandth inch, and the contact is read by listening for the making and breaking of the electric circuit in the usual telephone operator's receivers (shown at the left in Pl. IX, *C*), which are held to the ears of the operator by clamps.

Method.—The ends of the cylinders are smoothed off with plaster of Paris at right angles to the axes a short time before testing. This insures an even distribution of the breaking load over the ends. For this purpose a rigid table is used, the top of which is horizontal and consists of a heavy piece of plate glass about 1 foot square. After the glass has been oiled, plaster of Paris is spread on it about one-fourth inch thick, into which, before it sets, the cylinder is forced, so that all but a layer about one-sixteenth to one-eighth inch thick is squeezed out. The sides of the cylinder are made vertical by means of a spirit level. After the plaster at one end has set, the other end is treated in the same way. The cylinders thus prepared are placed in the testing machine without further bedding.

The load is applied continuously at a speed of about one-fortieth inch per minute, and readings of the gross deformations are taken at 5,000-pound intervals or at about 100 pounds per square inch. The load at first crack, the ultimate load, and the appearance of the ruptured cylinder are recorded, the latter in the form of a sketch. In Pl. IX, *A* and *B*, are shown typical forms of failure. In the example shown in *B* the rupture has occurred by shearing through the aggregate. Pl. IX, *D*, shows three typical cones from broken cylinders.

DENSITY TESTS.

Apparatus.—The tests for density of concrete are made in cylinder molds of wrought-iron pipe similar to those used for the determination of the density of cement mortar, except that they are 8 inches in diameter and 9 inches long, or 10 inches in diameter and 12 inches long.

Method.—The test is made in the same manner as that for density of mortar. In the series of tests now under way the proportions of cement and large and small aggregates are varied in order to obtain the mixture that will produce concrete with the greatest density. The ratio between the cement and the total aggregate is kept constant (1:9), while the ratio between the small and large aggregate is varied.

In another series about to be started this ratio of cement to total aggregate will be 1:6. Four or five trials are usually sufficient to determine the proportions giving a concrete of the greatest density.

The results of these tests are recorded on Form D.

Form D. { UNITED STATES GEOLOGICAL SURVEY. STRUCTURAL-MATERIALS TESTING LABORATORIES. } COMPRESSION CYLINDER REGISTER REPORT.

Station..... Approved:.....
Cylinder No. ..... Date made..... Date tested.....
Dimensions: Diameter.....in., length.....in., area.....sq. in.
Concrete: Proportions {by vol..... Kind of aggregate.....
by wt..... Characteristics of specimen.....
Storage..... Manner of testing.....

Form E is the log sheet upon which the micrometer readings in tests of modulus of elasticity are recorded, and Form F is used at the time of molding the test pieces. A record is made in the batch report of the basis upon which the proportioning was done, whether by volume, maximum density, or percentage of voids.

Form E. { UNITED STATES GEOLOGICAL SURVEY. STRUCTURAL-MATERIALS TESTING LABORATORIES. } LOG SHEET.

Station..... Approved.....
No..... Date.....
Observers..... Calculators.....

Applied load.	Total deformation.				Average of A and B.	Unit deformation.	Unit stress per square inch.	Remarks.
	A	B	A	B				
						Inches.	*Pounds.*	
.....	.....	.....	.....	.....	.....	.....	.....	
.....	.....	.....	.....	.....	.....	.....	.....	

Form F. { UNITED STATES GEOLOGICAL SURVEY. STRUCTURAL-MATERIALS TESTING LABORATORIES. } BATCH REPORT.

Station..... Approved.....
Batch No..... Date mixed..... Manner of mixing.....
Proportions (a) by weight..... (b) by loose volume.....

Material.	Reg. No.	Weight (pounds).			Per cent.
		Actual.	Per cubic foot.		
Cement.....	.....	.....	.....	Water in terms of dry materials.....	.....
Sand.....	.....	.....	.....	Moisture in {sand.....	.....
Stone.....	.....	.....	.....	stone.....	.....
.....	.....	.....	.....	gravel.....	.....
				cinders.....	.....
Water.....	.....	.....	.....	Time of adding water.....	

Time of placing in molds..... Batch used in specimens No..... Corresponding reports No.....
Remarks.—.....

Computations.—The proportions by weight entered on the batch report are determined from the weight per cubic foot of the material and the weight of the moisture contained in it and correspond to the proportions by volume.

The percentage of water added in the mixer plus the percentage of moisture contained in the material is found in terms of the dry material.

Densities are calculated in the same way as for the sand mortar, except that in this case there are three ingredients instead of two.

The initial modulus of elasticity is determined from the slope of the tangent drawn at the origin of a curve whose abscissas are the average unit deformations obtained from the micrometer readings on either side of the cylinder and whose ordinates are the unit stresses.

Forms G, H, I, and J are used for recording the results of these physical tests.

Form G. { UNITED STATES GEOLOGICAL SURVEY. STRUCTURAL-MATERIALS TESTING LABORATORIES. } SAND REPORT.

Station..... Approved .....

Reg. No..... Kind of sand..... Specific gravity.....

Weight per cubic foot { (a) Loose and moist.....pounds. (b) Loose and dried.....pounds.

Shape of grains .....

Voids { (a) Passing ¼-in. sieve.....per cent. (b) Screened to.....size.....per cent.

Moisture by weight in terms of dry material .....per cent.

Amount and character of silt.....

Yield { Volume of mortar / Volume of sand = ... Reg. No. of silt.....

Granulometric analysis:

Weight analyzed.....grams.

Retained on sieve—	Per cent.
No. 10 (wire.....)	.....
20 (wire.....)	.....
30 (wire.....)	.....
40 (wire.....)	.....
50 (wire.....)	.....
80 (wire.....)	.....
100 (wire.....)	.....
200 (wire.....)	.....
Passing sieve No. 200	.....

Remarks.—.....

Form H. { UNITED STATES GEOLOGICAL SURVEY. STRUCTURAL-MATERIALS TESTING LABORATORIES. } STONE REPORT.

Station..... Approved.....

Reg. No..... Kind of stone..... Specific gravity.....

General shape of pieces.....

Weight per cubic foot:	Pounds.
(a) Crusher run	.....
(b) Solid and dry	.....
(c) Passing ¼-inch sieve	.....
Voids:	**Per cent.**
(a) Crusher run	.....
(b) Passing ¼-inch sieve	.....
(c) Screened to.....size	.....
Yield { Volume of mortar / Volume of screenings =	.....
Absorption:	
(a) Crushed material { 24 hours	.....
(a) Crushed material { 48 hours	.....
(b) Solid material { 24 hours	.....
(b) Solid material { 48 hours	.....
Moisture	.....

Compressive strength of....inch cube cylinder....pounds per square inch.

Silt: Reg. No..... Amount..... Kind.....

Granulometric analysis:

Weight analyzed.....pounds.

Retained on screen—	Per cent.
2-inch	.....
1¾-inch	.....
1½-inch	.....
1¼-inch	.....
1-inch	.....
¾-inch	.....
½-inch	.....
¼-inch	.....
Passing ¼-inch screen	.....
Retained on sieve—	
No. 10	.....
20	.....
30	.....
40	.....
50	.....
80	.....
100	.....
200	.....
Passing No. 200 sieve	.....

Remarks.– .....

Form I. { UNITED STATES GEOLOGICAL SURVEY. STRUCTURAL-MATERIALS TESTING LABORATORIES. } SPECIFIC GRAVITY AND ABSORPTION REPORT.

Operator..... Date..... Reg. No..... Field No..... Test No..... Flask marks.....

	Grams.		Grams.
Weight of water, screenings, and specific gravity flask	....	Weight of pan and thoroughly dried screenings	....
Weight of screenings and specific gravity flask	....	Weight of pan	....
Weight of specific gravity flask	....	Weight of water absorbed	....
Weight of water	....	Weight of dry screenings in pan	....
Weight of screenings in flask	....	Water absorbed per gram of screenings	....
Weight of pan and air-dried screenings	....	Total weight of water absorbed by screenings in flask	....

Reading of water level { Temperature..... / 15° C..... / Corrected for calibration. / Corrected for absorption.

Volume of screenings.....

Specific gravity { Weight of screenings / Volume of screenings } = ...

Water admitted.....

Reading taken.....

Form J. { UNITED STATES GEOLOGICAL SURVEY. STRUCTURAL-MATERIALS TESTING LABORATORIES. } VOIDS REPORT.

Operator ..... Date..... Reg. No. .... Field No. .... Test No. ....

Weight of void can plus material plus water.	....	Weight of water (W)	....
Weight of void can plus material	....	Volume of void can	....
Weight of void can	....	Moisture per pound of material (m)	....
Weight of material (M)	....	Absorption per pound of material (a)	....

Effective weight of material = M (1 − m) = ...

Weight per cubic foot of material = $\frac{\text{Effective weight of material}}{\text{Volume of void can}}$ = ...

Effective weight of water, W − a M = ...

Percentage of voids = $\frac{\text{Effective weight of water}}{62.355 \times \text{volume of void can}}$ = ...

Computed voids: Volume = $\frac{\text{Weight per cubic foot}}{\text{Specific gravity} \times 62.355}$ = ...

Percentage of voids = 1 − volume..... ....

Time elapsed in charging void can { With material..... .... / With water ....

Approximate voids, ignoring absorption..... ....

Moisture:		Absorption:	
Weight of pan	....	Weight of pan	....
Weight of pan and material	....	Weight of pan and material	....

TESTS OF STONE.

Apparatus.—The large blocks of stone sent in by the field geologist, having been roughly dressed by hammer and chisel, are sawed into cubes by the gang saw (Pl. XI, *C*, p. 50) and finally ground to exactly 2 inches on an edge by rapidly revolving horizontal cast-iron disks about 18 inches in diameter.

Methods.—The position in which the blocks were bedded in the quarry is indicated on the stone by the collector and this mark is transferred to the finished cubes. Half of the cubes sawed out of the blocks are then crushed with the bedding plane perpendicular and the other half with it parallel to the direction of application of the load.

Previous to the strength tests the cubes are placed in a pan containing one-half inch of water, and their increase in weight measured at the end of twenty-four hours. The water is permitted to flow gently through the pan and is maintained at a constant level by an outlet placed one-half inch above the bottom of the pan. From these data the percentage of absorption is obtained. The weight per cubic foot and the specific gravity are also determined.

BEAM SECTION.

OUTLINE OF INVESTIGATIONS.

NATURE OF THE WORK.

The principal work in the beam section consists in the making and testing of plain and reinforced concrete beams. The beams are made of different consistencies, different aggregates, and, in the case of the reinforced beams, of different percentages of steel; the beams are tested at different ages. In addition to making and testing beams, the beam section also makes and tests cylinders and cubes formed of concrete like that used in the beams. Each rod used in the reinforced beams is tested in the beam section and all the materials that are used in the concrete are tested in the constituent-materials section. This gives a complete report of all the properties of the material used and makes it possible to study the effect of different properties on the strength of concrete beams.

The first schedule of tests (now under way) in the beam section is given in the accompanying table (p. 38). All the beams, cylinders, cubes, and bond test pieces outlined in this table have been made, and some of the 360-day test pieces have been tested.

Outline of first three series of beam tests.

Series.	Concrete.				Number of test pieces.				Round bars of mild steel 33,000.				Variables.
	Mortar.		Aggregate.	Consistency.	Beams.	Cylinders.	Cubes.	Bond.	Per cent.	Diameter (inches).	Number of bars.		
	1.	2.	4.								In beam.	Tested.	
1.	Standard cement.	Meramec River sand.	Granite.	Very wet.	12	12	12	.....	.....	.....	.....	.....	Aggregate and consistency.
			Limestone.		12	12	12	.....	.....	.....	.....	.....	
			Gravel.		12	12	12	.....	.....	.....	.....	.....	
			Cinders.		12	12	12	.....	.....	.....	.....	.....	
			Granite.	Medium.	12	24	24	.....	.....	.....	.....	.....	
			Limestone.		12	24	24	.....	.....	.....	.....	.....	
			Gravel.		12	24	24	.....	.....	.....	.....	.....	
			Cinders.		12	24	24	.....	.....	.....	.....	.....	
			Granite.	Dry.	12	12	12	.....	.....	.....	.....	.....	
			Limestone.		12	12	12	.....	.....	.....	.....	.....	
			Gravel.		12	12	12	.....	.....	.....	.....	.....	
			Cinders.		12	12	12	.....	.....	.....	.....	.....	
Total					144	192	192	.....	.....	.....	.....	.....	
A.[a]	Standard cement.	Meramec River sand.	Granite.	3 consistencies for each aggregate.	.....	36	.....	.....	.....	.....	.....	.....	Aggregate. Consistency. Proportion.
			Limestone.		.....	36	.....	.....	.....	.....	.....	.....	
			Gravel.		.....	36	.....	.....	.....	.....	.....	.....	
			Cinders.		.....	36	.....	.....	.....	.....	.....	.....	
Total					.....	144	.....	.....	.....	.....	.....	.....	
2.	Standard cement.	Meramec River sand.	One set each with gravel, limestone, granite, and cinders.	Medium.	48	48	48	One set of 12 for each aggregate.	0.49	½	2	96	Aggregate and percentage of steel.
					48	48	48		.74	½	3	144	
					48	48	48		.98	½	4	192	
					48	48	48		1.24	½	5	240	
					48	48	48		1.47	½	6	288	
					48	48	48		1.72	½	7	336	
					48	48	48		1.96	½	8	384	
Total					336	336	336	48	.....	.....	.....	1,680	
3.	Standard cement.	Meramec River sand.	Limestone.	Medium.	12	12	12	One set of 12 for each size of bar.	0.49	½	8	96	Percentage and diameter of steel.
					12	12	12		.98	½	16	192	
					12	12	12		1.10	¾	2	24	
					12	12	12		.98	1	1	12	
					12	12	12		1.65	¾	3	36	
					12	12	12		1.53	1¼	1	12	
					12	12	12		2.21	¾	4	48	
					12	12	12		1.96	1	2	24	
Total					96	96	96	48	.....	.....	.....	444	
Grand total					576	768	768	96	.....	.....	.....	2,124	

[a] Theoretical proportions.

Remarks.—Three test pieces identical in composition to be tested at each of the following ages: 30, 90, 180, and 360 days. Three cylinders of each aggregate, theoretically proportioned, to be tested at each of above ages. Three cylinders and three cubes of each aggregate for medium consistency to be tested at each of above ages. Mild steel.—One coupon to be tested from each bar.

The above outline of the first three series covers the following parts of the general programme (pp. 16-19): Section III.—B, items 2 and 5; C, item 1. Section IV.—A, items 1, 2, and 3.

The proposed schedule of beam tests is given in the table on pages 40–47.

This schedule is only tentative, the object of these tests being to determine the maximum strength of a beam—that is, to determine the amount and character of reinforcement necessary to cause failure by compression in the upper fibers. Many of these tests have been arranged on assumptions which may not be true and which may therefore necessitate a change in the series.

Beam schedule

Series.	Tests.		Concrete.[a]		Beams (all 8 inches wide and 11 inches deep, except as noted in series 11 and 22).		Number of test pieces.			
							Bond pieces—		Beams and cylinders—	
	Number (3 for each age).	Age in days.	Aggregate, 1 set each with—	Proportions.	Span (feet).	Depth to lower layer of steel.	For series.	Of each.	Of each for series.	Of each.
4	9	2 7 14	Gravel, granite, cinders, limestone.	1:2:4	12	10	....	[b] 9	....	36 36 36
Total	....	....	....	....	....	....	36	....	108	....
5	6	28 91	Gravel, limestone	1:1½:3	....	....	....	....	....	12 12 12
				1:3:6	12	10	....	[c] 6	....	12 12 12
				1:4:8	....	....	....	....	....	12 12 12
Total	....	....	....	....	....	....	36	....	108	....
6	6	28 91	Gravel, limestone	1:2:4	12	10	....	[b] 6	....	12 12 12
Total	....	....	....	....	....	....	12	....	36	....
7	6	28 91	Gravel, limestone	One set each with 1:2:4 and 1:3:6.	6	....	....	....	....	24 24 24
					8	10	....	[c] 6	....	24 24 24
					10	....	....	....	....	24 24 24
Total	....	....	....	....	....	....	24	....	216	....

[a] All mortar to be of standard cement and Meramec River sand, and of medium consistency except in the case of 12 out of the 18 cylinders and plain beams of series 20. Six of these 12 for each shape are to be of "dry" consistency, and the others "wet."

proposed for 1907.

Steel.						Reinforcement.			
Size (inches).	Per cent.	Number of bars. In beam.	Number of bars. Tested.	Elastic limit (thousands).	Kind of bar.	Rods.	Stirrups.	Variables.	Remarks.
½	0.98	4	144	35 to 40	Round			Age; aggregate; per cent.	
½	1.47	6	216						
½	1.96	8	288						
			648						
1	1.95	2	24	35 to 40	Round			Age; aggregate; per cent.	The percentage of reinforcement given in this series is only tentative. The expectation is that with one of these percentages for each proportion the compressive strength of the concrete will be developed if it can be done for this span, without diagonal reinforcement.
1	2.94	3	36						
1	3.92	4	48						
1	1.95	2	24						
1	2.94	3	36						
1	3.92	4	48						
1	1.95	2	24						
1	2.94	3	36						
1	3.92	4	48						
			324						
1	1.95	2	24	65 to 75	Round			Age; aggregate; per cent.	
1	2.94	3	36						
1	3.92	4	48						
			108						
1	0.97	1	24	35 to 40	Round			Age; span; aggregate; per cent.	One percentage to be computed for each span to develop the bond resistance of the concrete; one percentage to be taken above and one below this computed percentage in order to fix this point more definitely.
1	1.95	2	48						
1	2.94	3	72						
1	0.97	1	24						
1	1.95	2	48						
1	2.94	3	72						
1	0.97	1	24						
1	1.95	2	48						
1	2.94	3	72						
			432						

[b] For each aggregate.
[c] For each aggregate and each proportion.

Beam schedule proposed

Series.	Tests.		Concrete.		Beams (all 8 inches wide and 11 inches deep, except as noted in series 11 and 22).		Number of test pieces.			
							Bond pieces—		Beams and cylinders—	
	Number (3 for each age).	Age in days.	Aggregate, 1 set each with—	Proportions.	Span (feet).	Depth to lower layer of steel.	For series.	Of each.	Of each for series.	Of each.
8	6	28 91	Gravel, limestone	1:2:4	6	10		[a] 6		12 12 12 12 12 12 12 12 12 12 12 12 12 12 12
Total									180	
9	3	28	Gravel, limestone	1:2:4	6	10		[b] 3		6 6 6 6 6 6 6 6 6 6 6 6
Total							24		72	
10	3	28	Gravel, limestone	1:2:4	6	10		6		6
Total							6		6	
11	3	28	Gravel, limestone	1:2:4	12	20 22 18 20 22 18		[b] 3		6 6 6 6 6 6
Total							12		36	

[a] For each aggregate and each size of rod.

for 1907—Continued.

Steel.						Reinforcement.		Variables.	Remarks.
Size (inches).	Per cent.	Number of bars. In beam.	Number of bars. Tested.	Elastic limit (thousands).	Kind of bar.	Rods.	Stirrups.		
Will depend on results of tests in series 7.				50 to 60	Round.	Bent up, as shown at *A* (fig. 2); at least 2 rods carried through. All carried through.	None.... ½-inch rod stirrups spaced uniformly, as shown at *A* and *B* (fig. 2), to points *a*, as follows: 6 in. 4 in. / 6 in. 4 in.	Age; aggregate; per cent and method of reinforcement.	Fig. 2, to which reference is made under "Reinforcement," is on page 48.
These columns can not be completed (see remarks).				50 to 60	Square deformed. Square twisted. Hexagonal twisted. Symmetrical deformed.	None ...	½-inch round; 6 inches or less apart.	Aggregate; kind and per cent of reinforcement.	Steel: 3 percentages below that which developed compression strength in series 8; the reduction to be in proportion to the elastic limit.
Per cent same as that which developed compressive strength in series 9.				50 to 60	Square deformed.	None ...	¼-inch.....	Aggregate.	Square deformed stirrups 6 inches or less apart.
See remarks.				35 to 40 50 to 60	Round.... Deformed.	Same per cent as in series 8. None.	¼-inch....	Aggregate; depth; kind and per cent of reinforcement.	Stirrups as in series 10. Same percentage of horizontal and diagonal reinforcement as 6-foot beam that failed by compression in series 10 for deformed and in series 8 for plain bars; depth fixed by $\frac{d}{L}$ for 6-foot beams; same area of steel for all depths.

[b] For each aggregate and each kind of bar.

Beam schedule proposed

Series.	Tests.		Concrete.		Beams (all 8 inches wide and 11 inches deep, except as noted in series 11 and 22).		Number of test pieces.			
							Bond pieces—		Beams and cylinders—	
	Number (3 for each age).	Age in days.	Aggregate, 1 set each with—	Proportions.	Span (feet).	Depth to lower layer of steel.	For series.	Of each.	Of each for series.	Of each.
12	3	28	Limestone	1:2:4	12	10		a 3		3, 3, 3, 3, 3
Total							6		15	
13	3	28	Limestone	1:2:4	6	10		3		3, 3, 3, 3, 3
Total							3		15	
14	3	28	Limestone	1:2:4	12	10		3		3
Total							3		3	
15	3	28	Limestone	1:2:4	12	10		3		3
Total							3		3	
16	3	28	Limestone	1:2:4	12	10		3		3
Total							3		3	
17	3	28	Limestone	1:2:4	6	10		3		3
Total							3		3	
18	6	28, 91	Gravel, limestone	1:2:4	12	10		b 6		12, 12, 12, 12
Total							48		48	
19	6	28, 91	Gravel, limestone	1:2:4	6	10		b 6		12, 12, 12, 12
Total							48		48	

a For ½-inch rods; same for bottom rods.

for 1907—**Continued.**

Steel.						Reinforcement.			
Size (inches).	Per cent.	Number of bars. In beam.	Number of bars. Tested.	Elastic limit (thousands).	Kind of bar.	Rods.	Stirrups.	Variables.	Remarks.
Same as that which developed compressive strength in series 17.				50 to 60	See remarks.	Same as in series 11.		Kind of bar: Bottom, square; top, deformed. Reinforcement in compression side of beams, as shown at *C, D, E, F, G*, fig. 2 (p. 48).	
.....	.....	.....	.....	.....	.....				
See remarks.				50 to 60	Round....	Method of anchoring rods as shown at *H*, fig. 2 (p. 48). Per cent of reinforcement the lowest that caused failure in compression for deformed bars having high elastic limit concentrated in few bars in series 10.			
.....	.....	.....	.....	.....	.....				
½	1.96	8	24	35 to 40	Round....	Deformation as shown at *J*, fig. 2 (p. 48).			
.....	.....	.....	.....	.....	.....				
½	1.96	8	24	35 to 40	Round....	To destroy tensile stress in concrete, insert pieces of oiled tin at 4-inch intervals as shown at *K*, fig. 2 (p. 48).			
.....	.....	.....	.....	.....	.....				
½	98	4	12	35 to 40	Round....	Variable: Effect of arching concrete and anchoring rods, as shown at *L*, fig. 2 (p. 48).			
.....	.....	.....	.....	.....	.....				
Per cent same as that which developed compressive strength in series 8.				50 to 60	Round....	Diagonal rods as at *b* in *M*, fig. 2 (p. 48); angle of bend in rods variable. Spacing of ½-inch stirrups same as for maximum strength in series 8.			
.....	.....	.....	.....	.....	.....				
½	1.25	4	48	35 to 40	Square....	.....		Age; aggregate; kind of reinforcement.	Test of flats and squares, two sizes each: Square, ½-inch and ¾-inch; flat, 1¼ by 3/16-inch and 2 by ¼-inch.
2 x ¼	1.25	2	24		Flat.....				
1¼ x 3/16	1.17	4	48		....do....				
¾	1.41	2	24		Square....				
.....	.....	.....	.....	.....	.....	.....	.....	.....	
½	1.25	4	48	35 to 40	Square....	.....	.....	Age; aggregate; kind of reinforcement.	Do.
2 x ¼	1.25	2	24		Flat.....				
1¼ x 3/16	1.17	4	48		....do....				
¾	1.41	2	24		Square....				
.....	.....	.....	.....	.....	.....	.....	.....	.....	

[b] For each aggregate and each size of rod.

Beam schedule proposed

Series.	Tests.		Concrete.		Beams (all 8 inches wide and 11 inches deep, except as noted in series 11 and 22).		Number of test pieces.			
							Bond pieces—		Beams and cylinders—	
	Number (3 for each age).	Age in days.	Aggregate, 1 set each with—	Proportions.	Span (feet).	Depth to lower layer of steel.	For series.	Of each.	Of each for series.	Of each.
20	6	28 91	Limestone	1:2:4	12					6 6 6
Total									18	
21	6	28 91	Gravel, limestone	1:2:4	12			a 6		12 12 12
Total							36		36	
22	3	28	Gravel, limestone	1:2:4	6	15 20 15 20		b 3		6 6 6 6
Total							18		24	
Grand total									978	

a For each aggregate and each variation in method.

for 1907—Continued.

Steel.						Reinforcement.		Variables.	Remarks.
Size (inches).	Per cent.	Number of bars. In beam.	Number of bars. Tested.	Elastic limit (thousands).	Kind of bar.	Rods.	Stirrups.		
Plain beams								Age; consistency.	To be made in wooden molds.
Steel same as that which developed compressive strength in series 11. Age, aggregate, and method of molding and molds to be variable: (1) Wooden molds to be used under conditions of actual outside practice; (2) steel molds to be used under laboratory conditions, but uniform with (1) as to time; (3) steel molds to be used by outside workmen for comparison of workmanship.									
Initial percentage of reinforcement same as in series 10.				50 to 60	Square deformed; see remarks.			Aggregate; depth per cent and number of rods in reinforcement.	¼-inch stirrups spaced at 6 inches. First set of rods with number constant; second set per cent constant; diameter changing.

[b] For each aggregate and each size of rod.

MIXING.

Apparatus.—The concrete used in the beam section is mixed in a 1 cubic yard Chicago cube mixer (Pl. X, *B*). This mixer is equipped with a charging hopper (shown at the left of view) and is geared to a motor (shown at the right). When the concrete is thoroughly mixed the machine dumps it on the floor through the discharging end.

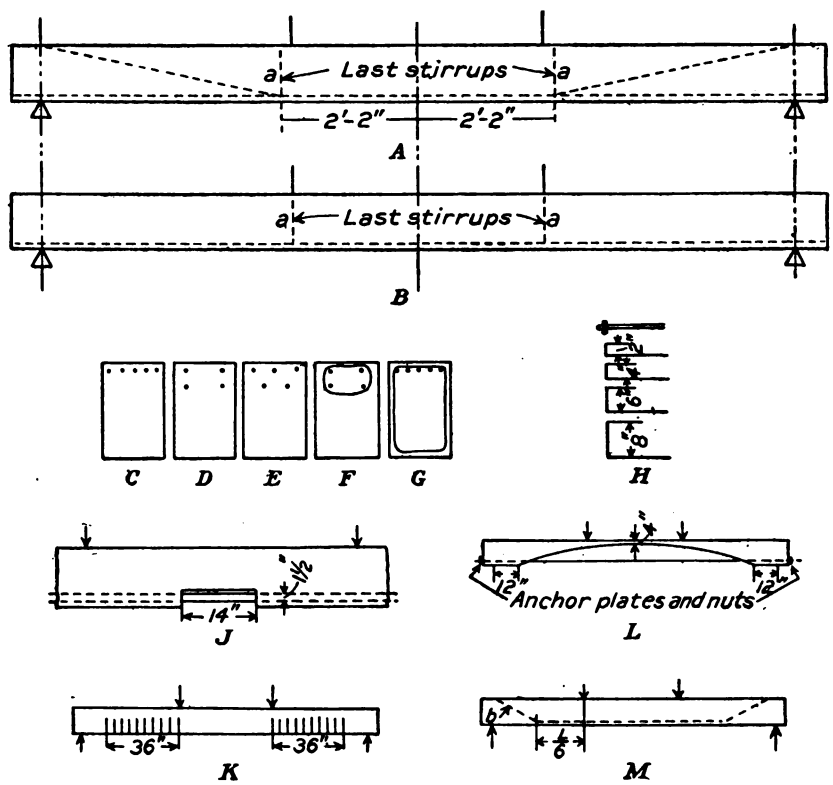

FIG. 2.—Diagrams showing details of reinforcement of beams (see tabular schedule, pp. 43, 45). *A*, Detail of bent-up rods (series 8); *B*, detail of spacing of stirrups (series 8); *C–G*, reinforcement of compressive side of beam—the spirals in *F* and *G* have a pitch of 4 inches (series 12); *H*, method of anchoring rods, whether with nut or bent up at end (series 13); *J*, direct measurements of deformation in steel (series 14); *K*, method of inserting pieces of oiled tin (series 15); *L*, detail of concrete arch and anchoring rods (series 16); *M*, angle of bend in rod (series 17).

Proportioning.—The proportions of ingredients entering into the concrete are referred to by volume of the loose, dry material. A record is also made of the proportions by weight. The weight per cubic foot of the dry material is determined in the constituent-materials section. Tests are made each morning to determine the correction which must be made in the weights of the material used during the day on account of the contained moisture. The weight of cement is assumed at 100 pounds per cubic foot.

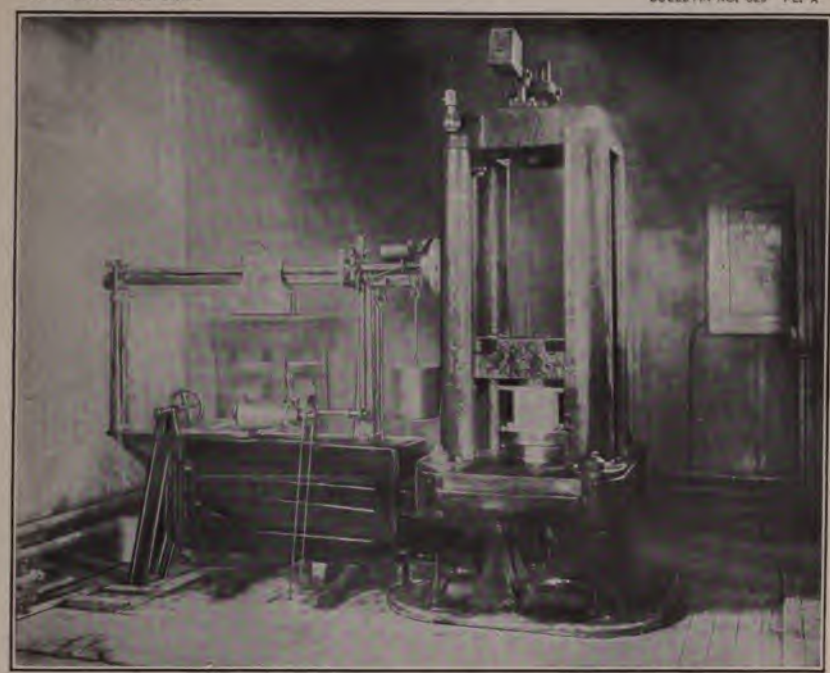

A. 200,000-POUND COMPRESSION MACHINE.

B. CONCRETE MIXER, CHARGING END. CAPACITY, 1 CUBIC YARD.

a, Scales for weighing water.

The ingredients are weighed in wheelbarrows on a platform scale situated between the material bins and the mixer. The water is weighed in a barrel on scales and supplied to the mixer in the same manner as previously described for the constituent-materials section (p. 32). Three different consistencies of concrete are used. The percentage of water required to bring each combination of aggregates to the three consistencies, stated as "wet," "medium," and "damp," described below, was determined by trial before the series was started. The percentage of water in terms of the dry material for each consistency and for each aggregate is kept constant throughout the series, but the actual amount of water added in the mixer varies from day to day with the varying percentage of moisture in the aggregates. The same form is used for the batch report as in the constituent-materials section. (Form F, p. 34.)

Wet concrete.—The concrete of "wet" consistency appears smooth and behaves like a viscous liquid in the mixer. It is carried with the mixer in the direction of motion but slides back from the ascending surface of the metal without being carried far enough over to drop back. This sliding causes the top surface of the lower part of the mass to work under to the bottom against the surface of the mixer. When "wet concrete" is dumped on the floor it stands in a very low pile, the sides assuming a slope of about 30° with the edge rounded against the floor. The mass has a smooth appearance, neither voids nor individual stones being visible. When deposited in the molds it is impossible to compact it by tamping, and it splashes under the rapid strokes of the pneumatic tamper. Water appears on the surface immediately upon being placed in the molds, and a finished beam is covered with from one-fourth to one-half inch of water.

Medium concrete.—Concrete of "medium" consistency appears almost as smooth as that of "wet" consistency but is more lumpy. As the mixer turns, the sliding action noticed with the "wet" consistency is accompanied by the dropping back of lumps from the ascending side of the cube. The lower edge of that portion of the material which slides does not turn smoothly under the body of the mass, as is the case with the "wet" consistency, but rolls in a more or less lumpy condition. When dumped on the floor the pile stands at a slope of about 45° and the surface is lumpy. No voids are apparent on the surface, and the individual stones stand out distinctly; a granular coating of sand mortar is visible on the surface of the aggregate. This concrete is also incompressible under the tamper, as the material rises on all sides of the instrument, but there is no splashing. No water collects on the top of the finished beam, but the surface is sleek and easy to finish with a trowel.

Damp concrete.—Concrete of "damp" consistency is decidedly granular in the mixer, and the tendency to lump is not so great as with the "medium" concrete. The material dropping from the top of the mixer falls mostly as individual stones and particles of mortar. While the material when dumped on the floor stands at the same angle as the "medium" concrete, it has a decidedly different appearance. It is granular, has large voids, and the mortar coating on each stone is clearly visible. No water shows at any point. The term "damp earth" applies well, at least to the mortar. When tamped the material offers considerable resistance.

The top of the finished beam is only damp, not enough water flushing to the surface to permit troweling except with difficulty.

Method.—When the desired weight of dry material has been ascertained, it is put into the mixer, which is turned two minutes before any water is added. The proper amount of water is then added and the batch is mixed for three minutes more. The mixer dumps the concrete on the floor, and the portion to be used in the beams is shoveled into wheelbarrows and wheeled to the molding room, about 50 feet away. The cylinders, cubes, and bond test pieces are molded in the mixing room, the concrete for these being shoveled directly into the molds from the floor. Two beams, two cylinders, and two cubes are molded from each batch.

MOLDING.

The molds used for the cylinders and cubes are the same as those used in the constituent-materials section (Pl. VIII, *B*). The concrete cubes are 6 inches on a side, and the cylinders are 8 inches in diameter and 16 inches long.

The bond test pieces are cylinders 8 inches in diameter and of varying length, the shorter lengths being used for small rods.

The bond test pieces are molded in cylinder molds in which are placed closely fitting cylindrical wooden blocks of sufficient thickness to make the test pieces the proper length when finished flush with the top of the mold. At the center of the top surface of the blocks is a socket about one-fourth inch deep, to receive the lower end of the rod, which is to be embedded in the cylinder. The machined casting shown in Pl. XI, *A*, is used to surface the top of the test piece and to make the rod perpendicular to the top of the test piece. The bore of the stem can be altered to accommodate different-sized rods by introducing brass bushings of various interior diameters.

The thickness of the block used for each kind of concrete and size of rod is varied so that the length of embedment for each test piece will be such that the rod will be pulled out of the concrete before it is stressed to its elastic limit. The lower end of the rod is placed in the socket in the center of the wooden block and held in a vertical position

A. APPARATUS FOR FINISHING TOP OF BOND-TEST SPECIMENS.

B. BEAM SELECTED AT RANDOM TO SHOW ACCURACY OF ROD SPACING.

C. GANG SAW FOR CUTTING CUBES FROM BLOCKS OF STONE.

Damp concrete.—Concrete of "damp" consistency is decidedly granular in the mixer, and the tendency to lump is not so great as with the "medium" concrete. The material dropping from the top of the mixer falls mostly as individual stones and particles of mortar. While the material when dumped on the floor stands at the same angle as the "medium" concrete, it has a decidedly different appearance. It is granular, has large voids, and the mortar coating on each stone is clearly visible. No water shows at any point. The term "damp earth" applies well, at least to the mortar. When tamped the material offers considerable resistance.

The top of the finished beam is only damp, not enough water flushing to the surface to permit troweling except with difficulty.

Method.—When the desired weight of dry material has been ascertained, it is put into the mixer, which is turned two minutes before any water is added. The proper amount of water is then added and the batch is mixed for three minutes more. The mixer dumps the concrete on the floor, and the portion to be used in the beams is shoveled into wheelbarrows and wheeled to the molding room, about 50 feet away. The cylinders, cubes, and bond test pieces are molded in the mixing room, the concrete for these being shoveled directly into the molds from the floor. Two beams, two cylinders, and two cubes are molded from each batch.

MOLDING.

The molds used for the cylinders and cubes are the same as those used in the constituent-materials section (Pl. VIII, *B*). The concrete cubes are 6 inches on a side, and the cylinders are 8 inches in diameter and 16 inches long.

The bond test pieces are cylinders 8 inches in diameter and of varying length, the shorter lengths being used for small rods.

The bond test pieces are molded in cylinder molds in which are placed closely fitting cylindrical wooden blocks of sufficient thickness to make the test pieces the proper length when finished flush with the top of the mold. At the center of the top surface of the blocks is a socket about one-fourth inch deep, to receive the lower end of the rod, which is to be embedded in the cylinder. The machined casting shown in Pl. XI, *A*, is used to surface the top of the test piece and to make the rod perpendicular to the top of the test piece. The bore of the stem can be altered to accommodate different-sized rods by introducing brass bushings of various interior diameters.

The thickness of the block used for each kind of concrete and size of rod is varied so that the length of embedment for each test piece will be such that the rod will be pulled out of the concrete before it is stressed to its elastic limit. The lower end of the rod is placed in the socket in the center of the wooden block and held in a vertical position

A. APPARATUS FOR FINISHING TOP OF BOND-TEST SPECIMENS.

B. BEAM SELECTED AT RANDOM TO SHOW ACCURACY OF ROD SPACING.

C. GANG SAW FOR CUTTING CUBES FROM BLOCKS OF STONE.

ROOM FOR MOLDING BEAMS.

Three empty molds in the foreground.

ROOM FOR MOLDING BEAMS.

Three empty molds in the foreground.

by hand while the concrete is tamped around it. The concrete is brought somewhat above the top of the mold; then the casting shown in Pl. XI, *A*, its surface having been oiled, is slipped down over the rod and twirled about on the surface of the concrete. After the concrete has set the casting is removed, leaving the upper surface of the test piece as a smooth plane perpendicular to the rod. The test pieces are stored in the moist room.

The molding room is shown in Pl. XII. Three empty molds used in forming the beams are shown in the foreground. Each mold makes a beam 8 inches wide, 11 inches deep, and 13 feet long, and consists of five sections of steel channel bolted together. The two side channels and the two pieces closing the ends are placed with their flanges outward. The channel forming the bottom is placed with its flanges turned down. At the points where the beams are supported in moving them the webs of the bottom channels are cut away for a width of $1\frac{9}{16}$ inches. When the beam is being molded this slot is closed by a filler. When the beam is ready to be moved this filler is driven out and a slightly narrower piece which projects $1\frac{1}{4}$ inches beyond each side of the beam is substituted. A stirrup hanging from the chain blocks is hooked under these projecting ends. When the concrete is ready to be placed in the molds their inside surfaces are coated with oil.

In molding the plain beams the concrete is deposited in three layers of approximately equal thickness and the layers are tamped by hand. Each layer is tamped three times with an iron tamper weighing $13\frac{3}{4}$ pounds and having a rectangular face, $1\frac{1}{4}$ by $3\frac{1}{2}$ inches. The following sequence of steps is strictly followed: Beginning at one end of one side of the beam the tamper is moved its own width at each stroke until it arrives at the opposite side. It is then moved forward and worked back across the beam. In this way every part of a layer, after the first tamping, has been struck once. This operation is then repeated. After each layer has been tamped twice the concrete is spaded back from the sides of the mold, the attempt being to reach down to the bottom at each spading. With the dry mix, however, it was found impossible to force the spade to the bottom after the top layer had been tamped. After each spading the layer is tamped a third time to force the concrete back against the sides of the mold. The tops of all beams are troweled to as smooth a surface as possible with a large bricklayer's trowel.

In molding reinforced-concrete beams two methods are used, depending upon whether the steel is placed in one or in two layers. All the reinforced beams are tamped with a pneumatic tool working under 60-pound pressure and having a 3-inch by $\frac{3}{4}$-inch rectangular head. The method of tamping described above for the plain beams

is followed, except that each layer, after the first, is tamped once before spading and once after. When the rods are in one l their centers are placed 1 inch from the bottom, except for 1- and 1¼-inch rods, for which a dist ce of 1¼ inches was used. S cient concrete is placed in the bo om of the mold to bring the face of the layer a little above the center of the rods. After layer has been tamped twice the rods are laid upon it and held proper distance apart and from the sides of the mold by slc wooden templets. The rods are then tapped down into the con to the required depth; the distance down from the top being g by means of a T-shaped templet, the arms of which rest on the s of the mold and the end of the leg on the rods. The concrete is placed in three equal layers, tamped and spaded as described ab and the top troweled smooth. With those beams reinforced two layers of rods the manner of placing the first layer of con and the bottom layer of rods is identical with that followed v there is but one layer of steel. When the lower rods have been pl a layer of concrete is added of such thickness that, when tampe surface comes about to the depth of the center of the upper lay rods, which are placed 2½ inches from the bottom of the beam. layer of rods is then placed in the same manner as the first la The concrete in the remainder of the beam is placed in three la in the usual manner and the top troweled. The accuracy with w the rods are spaced may be seen in Pl. XI, *B*, which shows a b selected at random and cut open after testing.

Three beams are molded in succession; the first three are mo on the floor and over these wooden horses are placed upon whi support another set of three beams. The molds a remain on the beams for twenty-four hours. The si are then removed for use in molding other beams. remain on the bottom channels until lack of room on floor makes it necessary to move them into the moist r the present accommodations the time that the beams ar to remain on the molding floor ranges from twelve to six When the side channels are removed the beams are cov burlap, which is kept wet by sprinkling with a hose at regu hour intervals.

STORAGE.

When it becomes necessary to move the beams they are l from the bottom channels, as described, by means of hoists. 4-wheeled trolleys run on the bottom flanges of I beams that tra the ceilings of the molding and storage rooms. A smooth mo free from jolting, is obtained by the use of Yale & Towne tr chain blocks. The tracks are spaced such a distance apart th

INTERIOR VIEW OF MOIST ROOM FOR STORAGE OF TEST PIECES.

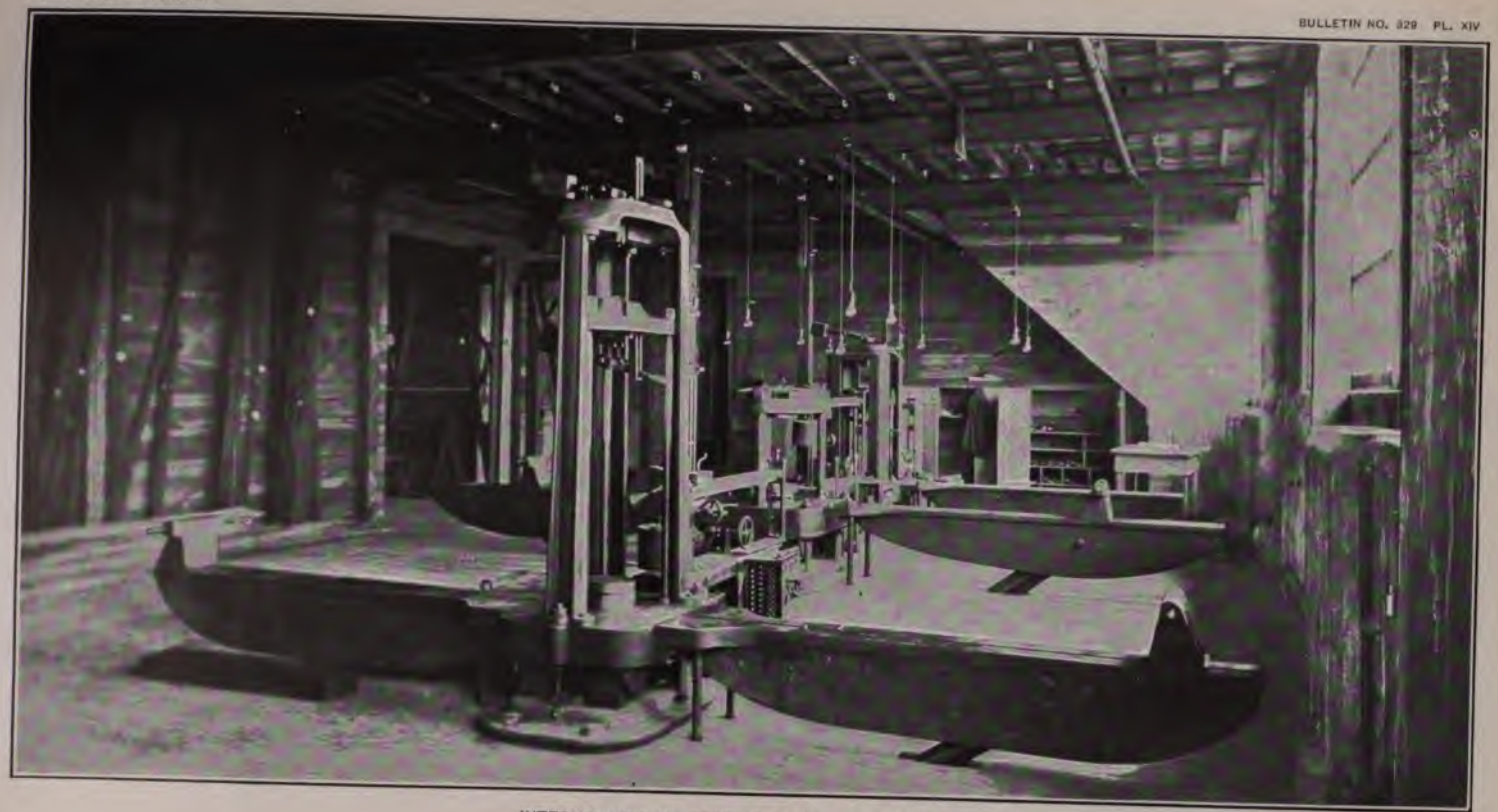

INTERIOR VIEW OF TESTING ROOM, BEAM SECTION.

13-foot beam will be supported at those points which will cause a minimum bending moment.

An interior view of the moist room for storing beams, cylinders, cubes, and bond test pieces is shown in Pl. XIII. A 13-foot beam, supported by the trolleys, is shown at the right. The cylinders are piled three high with three cubes at the top. The beams are piled six high and the piles are prevented from toppling over by the wooden racks shown at the left. Each beam rests on two small timbers placed at the points that give the smallest bending moment. The register numbers of the test pieces may be seen. Either steam or water may be sprayed into the moist room from the ordinary type of fire sprinklers near the ceiling. At the present time water is sprinkled in fine spray over the test pieces at regular eight-hour intervals.

The waterproofing of this room for the purpose of making it steam tight was done without cost to the laboratories under the supervision of a representative of the Hydrex Felt and Engineering Company, through the courtesy of the manager, Mr. Edward De Knight.

Both the molding and storage rooms have self-registering thermometers giving a seven days' continuous record, and the moist room is equipped with a hygroscope for determining the percentage of moisture in the air.

Each day the beams that are to be tested are raised by means of the chain hoists, moved out into the molding room, and placed upon two trestles or upon the floor, whence they are taken to the testing room.

BEAM TESTING.

APPARATUS.

The testing room is equipped with one 3-screw 100,000-pound testing machine, one 4-screw 200,000-pound testing machine, and one 3-screw 200,000-pound testing machine, as shown in Pl. XIV. A 600,000-pound machine for testing columns and large beams is being installed in this room. The machine ordinarily used for testing beams is shown in the center.

The beams are raised and carried to the testing machine by means of a steel carriage shown in Pl. XVI, *B*. The carriage is pushed along the floor end first over the extension arm of the testing machine and one end of the beam is lowered to a dolly and rolled into place on the testing table. The beams are tested on a 12-foot span. The load is applied to the beams at the third points; that is, 4 feet from the ends and 4 feet apart. The apparatus through which the load is transmitted to the beams at two points consists of a steel box girder 4 feet long by 6 inches deep, built of two 6-inch channels and a ½-inch by 8-inch cover plate, top and bottom.

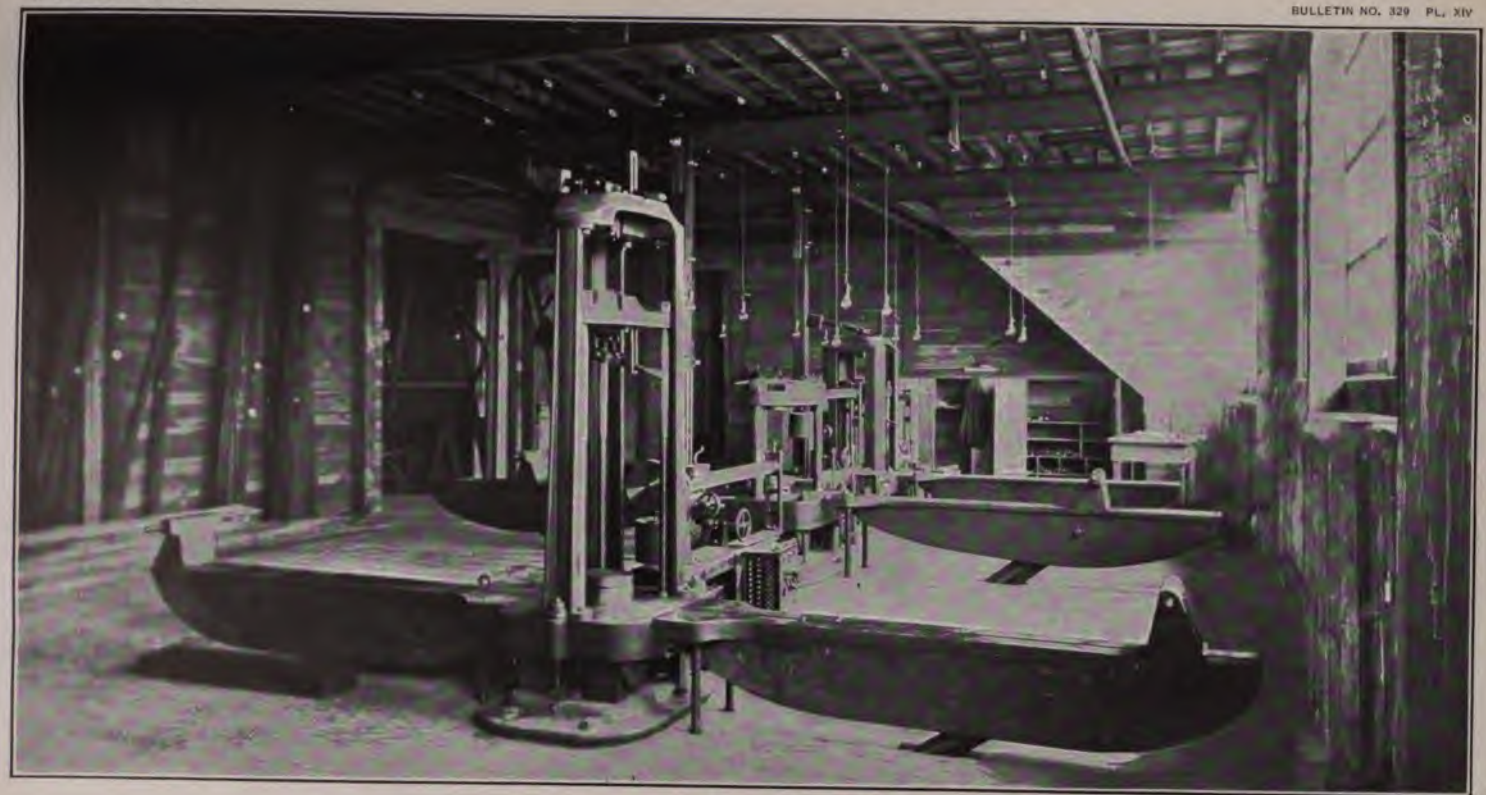

INTERIOR VIEW OF TESTING ROOM, BEAM SECTION.

Addition of the part *e* gives a rocking motion perpendicular to the length of the beam. This insures an even distribution of the reaction over the width of the beam and also permits the lower part of the beam to elongate without restraint.

The test is started by supporting the beam at the third points to get zero deformations; only one set of deformeters is used. The gage length is 29¼ inches, and the lower contact point is 1 inch above the bottom of the beam, except when the reinforcing rods are 1 inch or 1¼ inches in diameter, when the lower contact points are 1¼ inches from the bottom of the beam. The upper contact points are one-half inch below the top of the beam in all cases.

For the purpose of reading vertical deflections a steel piano wire is stretched tight from end to end of the beam and hangs from two clamps, being supported at each end by a projection near the bottom of the clamp directly over the supports. One of these clamps is shown in Pl. XV, *B*. Near the center of the span a steel scale is fastened to the side of the beam directly behind the piano wire, and the deflections are read on this scale. In order to avoid parallax a mirror is fastened beside the scale.

After readings are taken at zero total deformations in the gage length and when the beam rests under its own weight the load is applied in increments which vary with the amount of reinforcement in such a way that as large a number of points as possible is obtained where there is an abrupt change of direction of the load-deformation curve. The first three increments in all cases are 1,000 pounds, after which they are usually 500 pounds each up to a total load of about 7,000 pounds. Between these limits it has been found the cracking of the concrete brings about a sharp change in the direction of the curve. Increments of 1,000 pounds are used from about 7,000 pounds up to nearly the maximum, after which 500-pound increments are again used. Great care is taken to discover the first crack and to locate and trace all the cracks that appear throughout the test. Three men examine one surface of the beam very carefully with reading glasses after each 1,000-pound increment of load. The directions of the cracks and the highest points to which they reach before they become invisible through the reading glasses are marked with a pencil on the concrete and the applied load on the beam is marked at the top of each crack. When the test is completed these pencil marks and numbers are painted on the concrete and the beams are photographed in sets of three. These photographs, two of which are shown in Pl. XVII, *a*, *b*, form chronological charts of the development of the cracks, giving their position, shape, and extent for each load. With the 28-day-old beams this method was strictly followed for each individual beam, but when three beams identical in construction and 28 days old failed by tension in the steel, it was safe to assume that the corresponding older

A. ATTACHMENT AND MICROMETER FOR MEASURING SLIP OF RODS.

a, End of rod.

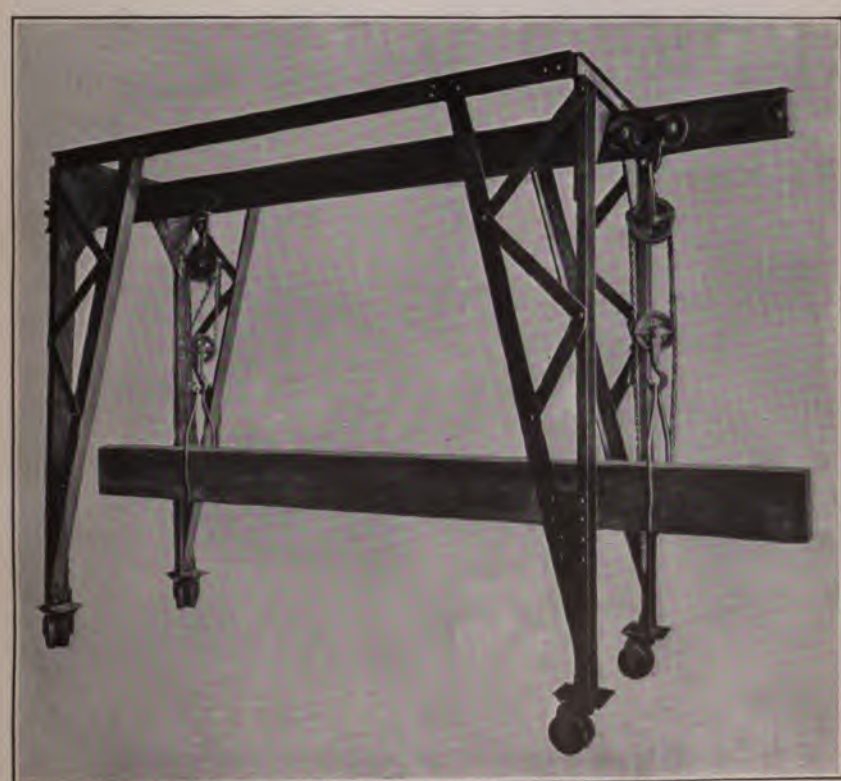

B. STEEL CARRIAGE FOR HANDLING BEAMS.

beams would fail in the same manner, since the gain in strength of the concrete rendered it less likely to fail. Consequently, when the older beams were tested, the cracks were marked out for the increments of 1,000 pounds for the first beam only of each set of three. The other two were tested to failure; at the maximum load the cracks were marked out as before. A group of three beams treated in this manner is shown in Pl. XVII, *c*, the bottom beam being the one first tested.

Slipping of the rods with reference to the adjacent concrete at the ends of the beam is determined by means of a micrometer reading to one ten-thousandth of an inch, shown at the extreme right end of the beam illustrated in Pls. XV, *B*, and XVI, *A*. The micrometer is clamped to the end of the beam, from which a small portion of concrete has been removed, exposing the end of one of the reinforcing rods. The micrometer screw is adjusted to touch the end of the exposed rod. No electric contact is used with the micrometer since the least slipping of the rods may be detected by touch. This same instrument is used to detect the slipping of the rods in the bond tests.

Form L is used for recording the results of the tests on reinforced concrete beams.

Form L. { UNITED STATES GEOLOGICAL SURVEY. STRUCTURAL-MATERIALS TESTING LABORATORIES. } REINFORCED BEAM TEST.

Beam Reg. No. ..... Lab. No. ..... Age ..... days. Gage length ..... inches. Contact points spaced ..... inches apart. Weight of beam ..... pounds. Length of beam ..... feet ..... inches. Span ..... feet ..... inches. Cross section at center ..... inches by ..... inches. Rods: Number.....; size.....; kind..... Reg. No. of steel..... For distribution of steel, see diagram No.... For information regarding concrete and corresponding test pieces, see Batch report Bm....

Deformeter No. ..... Weight of deformeter ..... pounds. Load applied at ..... Applied load at first observed crack ..... pounds. Position of crack ..... feet ..... inches from center. Maximum applied load ..... pounds. Position of failure crack ..... feet ..... inches from center. Development of cracks observed ..... Deflection of center ..... Character of failure .....

Beam brought from damp closet at .....; test started at ....., time .....; test completed at ....., time .....; sheet given to office at ....., time .....; delay ....., due to.....

COMPUTATIONS.

The forms of batch report for both the plain and reinforced beams (Form F, p. 40) are identical except that for the reinforced beams the number, size, position, and form of rods are also given. For these beams the percentage of reinforcement is computed and the yielding point of the steel is found from tests on short pieces cut from the reinforcing rods before being placed in the beams.

In order to make clear the methods used in obtaining some of these values a short statement of the theory will be given.

The method of finding the necessary decrease in the reactions in order that the total deformation within the gage length will be zero will be given first. This method is used in order to obtain a greater number of readings of the micrometers during the test and therefore more points on the deformation–bending moment curves.

When a beam rests freely on supports, the upper and lower fibers are deformed on account of the bending moment due to the weight of the beam. When the supports are at the ends of the beam, the upper fibers are shortened and the lower fibers are lengthened. For equal moduli of elasticity in tension and compression, which are constant for concrete for small loads, the deformation at any point of the beam is proportional to the bending moment at that point,

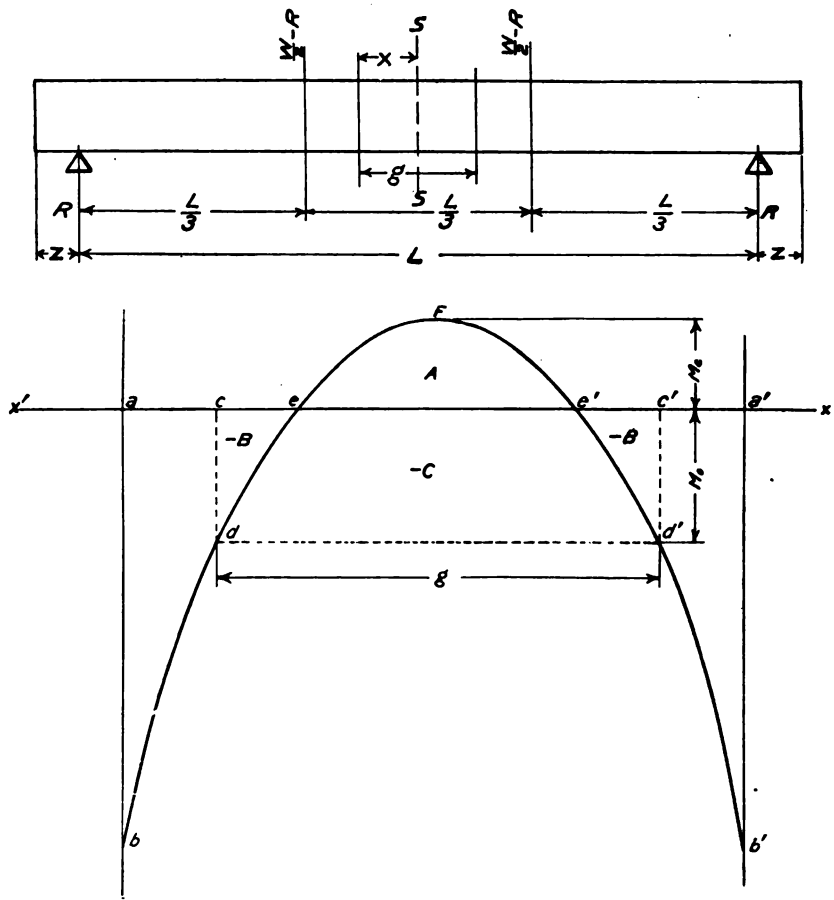

FIG. 3. Diagrams illustrating method for computation of concrete beams. Upper diagram: Notation used. Lower diagram: Curve of bending moment within gage length (beam supported at third points).

and the total deformation over any length of the beam is proportional to the area of the bending-moment diagram over that length. Therefore when the total positive bending-moment area in the gage length of the deformeters equals the total negative bending-moment area in the gage length, the net total deformation in that length is zero, and both the upper and lower fibers of the beam have the same length as when unstressed. For a particular reaction at the ends of

the beam the positive bending-moment area in the gage length is equal to the negative bending-moment area. In order to get this reaction, the beams are supported at the third points by stirrups suspended from the head of the machine. As the stirrups take more and more of the weight of the beam the end reactions become smaller and smaller and the character of the bending-moment diagram within the gage length changes until the desired condition is reached.

The method of finding the required reactions for total zero deformations within the gage length in terms of the weight of the beam and other known quantities (fig. 3) is as follows:

Let L = distance between the supports.

g = gage length of deformeters.

Z = overhang of beam at each end.

$\frac{L}{3}$ = distance from each support to force exerted by each stirrup.

W = total weight of beam.

$\frac{W}{2} - R$ = force exerted by each stirrup at a distance of $\frac{L}{3}$ from the supports.

R = each reaction at end.

SS = any vertical section within the gage length at a distance, X, from one of the gage points.

M_x = bending moment at section SS.

M_o = bending moment at deformeters, where $X = 0$.

M_c = bending moment at center of beam, where $X = \frac{g}{2}$.

m = constant bending moment over the gage length due to the weight of all attachments, such as bearing blocks under the load points and the deformeters. This weight is applied outside of the gage length and equally on each side of the center of the beam.

The bending moment at section SS, considering forces to the left only, is as follows:

$$M_x = R\left(\frac{L}{2} - \frac{g}{2} + X\right) + \left(\frac{W}{2} - R\right)\left(\frac{L}{6} - \frac{g}{2} + X\right) - \frac{W}{2(L+2Z)}\left(\frac{L}{2} + Z - \frac{g}{2} + X\right)^2 + m.$$

Reducing to a simpler form gives:

$$M_x = \frac{RL}{3} - \frac{W}{4}\left(\frac{L}{6} + Z\right) - \frac{W}{4\left(\frac{L}{2} + Z\right)}\left(\frac{g}{2} - X\right)^2 + m.$$

The bending moment at the end of the gage length ($X=0$) is as follows:

$$M_o=\frac{RL}{3}-\frac{W}{4}\left(\frac{L}{6}+Z\right)-\frac{Wg^2}{16\left(\frac{L}{2}+Z\right)}+m.$$

The bending moment at the center of the gage length $\left(X=\frac{g}{2}\right)$ is as follows:

$$M_c=\frac{RL}{3}-\frac{W}{4}\left(\frac{L}{6}+Z\right)+m.$$

The moment diagram between the third points when there is both positive and negative bending moment in the gage length is shown in fig. 3, in which xx′ is the horizontal axis of the moment diagram. The curve d, e, e′, d′ is a parabola, and crosses the axis at two points, viz, at e and at e′, between the ends of the deformeters. Then in the gage length c c′ there is negative bending moment from c to e and from e′ to c′, and positive bending moment from e to e′. The dotted lines c d, c′ d′, and d d′ are drawn for the purpose of demonstration. Then the distance M_c represents the bending moment at the center of the gage length, and M_o represents the bending moment at the end of the gage length. The negative bending-moment areas within the gage length are c d e and c′ d′ e′, each being represented by $-B$. The positive bending moment area within the gage length is e F e′, and is represented by A.

The condition that the positive bending-moment area is equal to the negative bending-moment area is represented by the equation: $A=-2B$.

Adding the quantity $-C$ to both sides of the equation gives: $A+(-C)=-2B-C$.

The first part of this equation is the area included between the horizontal line d d′, and the parabola d F d′, that is:

$$A+(-C)=\frac{2}{3}g\left[M_c+(-M_o)\right]$$

The second part of the equation is equal to the area of the rectangle d c c′ d′, that is:

$$-2B-C=-g\,M_o.$$

Therefore $$\frac{2}{3}g\,[M_c+(-M_o)]=-gM_o.$$

Whence $2M_c=-M_o$.

Substituting the values of M_o and M_c as found above gives—

$$+\frac{2RL}{3}-\frac{2W}{4}\left(\frac{L}{6}+Z\right)+2m=-\frac{RL}{3}+\frac{W}{4}\left(\frac{L}{6}+Z\right)+\frac{Wg^2}{16\left(\frac{L}{2}+Z\right)}-m.$$

Whence $$RL=\frac{3W}{4}\left(\frac{L}{6}+Z\right)+\frac{Wg^2}{16\left(\frac{L}{2}+Z\right)}-3m$$

and $$R=\frac{3W}{4L}\left(\frac{L}{6}+Z\right)+\frac{Wg^2}{16L\left(\frac{L}{2}+Z\right)}-\frac{3m}{L}.$$

In almost all the beams tested at the laboratories L, Z, g, and m are constant.

It only remains to find W and to compute R. A table has been computed by the above formula for all the usual values of W, and the corresponding values of R in any case can be read directly from the table.

Form K (p. 55) is used for reporting the results of the tests on plain concrete beams.

The breaking load consists of the applied load together with the weight of the beam plus the deformeters. The total load is read directly from the scale arm of the machine when the beam fails, while the applied load is the total load less the weight of the beam and deformeters, which are found at the beginning of the test.

After the loads have been found the bending moment is computed and the value of the arbitrary term $\frac{M}{bd^2}$ is found for purposes of plotting. The term $\frac{M}{bd^2}$ at the center for the breaking load is obtained by the usual calculation, considering the weight of the beam between the supports and the 6-inch overhang at each end as a uniform load and considering the weight of the deformeters as two loads concentrated at the ends of the gage length.

The quantities recorded for unit elongation of the lower fiber for weight of beam, together with the weight of all attachments, are the micrometer readings (1) when the beam is partly suspended so as to cause zero total deformations in the gage length, and (2) when the beam rests under its own load plus that of the deformeters.

The computations involved are the subtraction of these two micrometer readings, the averaging of the differences obtained on opposite sides of the beam, and the correction of this average so that it will represent the elongation of the lower fiber instead of that of the fiber upon which the deformeter was clamped. This last computation is made upon the basis that the elongation varies uniformly

as the distance from the neutral axis or upon the usual assumption of the conservation of plane sections. The reading of the two sets of deformeters verifies this assumption.

The unit deformation is then obtained by using the parabolic formula, except in cases where the bending moment due to the applied load is so great in comparison to that due to the weight of the beam that the error due to dividing by the gage length is less than the probable error in reading the deformeters. The correction by use of the parabolic formula is based upon the assumption that the total deformation of any fiber is proportional to the product of the bending moment and the length of the fiber, or, in other words, to the bending-moment area included in the length of the fiber. This is represented in fig. 4, in which M_g is the bending moment at the end

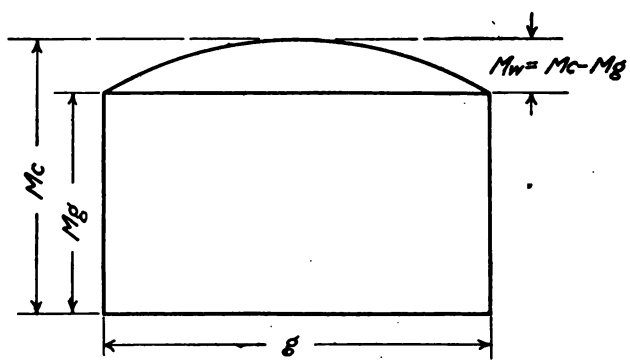

FIG. 4.—Diagram illustrating bending moment between gage points.

of the gage length and M_c is that at the center of the gage length, the difference being M_w. The area (A) in the diagram is equal to $A = g\ (M_g + \frac{2}{3} M_w)$. Dividing this area by the greatest M_c gives a new gage length which, were the bending moment constant over it and equal to M_c would give the same total deformation which was measured. Dividing this deformation by the new gage length gives the unit deformation where the bending moment is greatest. The final deformeter values are calculated from the load and the micrometer readings at the last full set of micrometer readings before the maximum load was reached.

The percentage of the distance of the neutral axis from the top of the beam is assumed to be equal to the deformation of the top fiber multiplied by 100 and divided by the sum of the top and bottom deformations.

The modulus of rupture is calculated by means of the formula $S = \frac{M_c}{I}$, the value of M at the center of the span being used.

The short sections of the plain beams are not suspended for zero deformations in the gage length, and therefore the deformations calculated for these are those due to the applied load only.

Form L (p. 57) is used for reporting the results of the tests of reinforced concrete beams.

The percentages of steel recorded in the batch report are given in terms of the section of concrete above a line drawn through the centers of the rods, the lower layer being taken when there is more than one layer.

The position of the neutral axis is calculated as in the plain beams, except that instead of using the deformation of the lower fiber, the deformation of the steel is used, thus obtaining the percentage of the depth below the top in terms of the distance from the top of the beam to the center of the lower layer of rods. The position of the neutral axis is calculated for several loads up to the maximum, and curves are drawn in order to show the variation in the position with the increase in the load.

The values under this general heading are obtained from the load, deformations, and deflections at the last full set of micrometer readings before the maximum load. After the location of the neutral axis has been found, the final deformeter values at the top of the beam are corrected so as to give the deformations at the extreme top. It should be noted that the lower micrometers are clamped directly over the steel, and therefore no correction of the micrometer readings is necessary to allow for the fact that the fiber whose elongation is required is not the fiber upon which the micrometers are clamped.

All the calculations made for the plain beams are repeated here except the one giving the modulus of rupture, for which a special formula must be used. The maximum values are obtained from the load, lower micrometer readings, and deflections when the beam has reached its maximum resistance, or from the last full set of deformeter readings before failure.

TESTS OF CYLINDERS AND CUBES.

Method.—A cylinder and a cube are made from the same batch of concrete from which each beam is molded, and all are tamped by hand with a tamper weighing 7 pounds and having a circular face 3½ inches in diameter. The same molds (shown in Pl. VIII, *B*, p. 30) are used for these specimens as for those tested in the constituent-materials section. The method of testing is also the same (pp. 31–36). The compressometers for measuring the deformations of the cylinders are shown in Pl. IX, *C* (p. 32). The micrometers used on these compressometers measure directly to $\frac{1}{10000}$ inch. Form M is used for recording the results of tests.

Form M. { UNITED STATES GEOLOGICAL SURVEY. STRUCTURAL-MATERIALS TESTING LABORATORY. } CYLINDER TEST.

Cylinder reg. No. ..... Lab. No. ..... Gage length, ... inches. Diameter, ... inches. Length, ... inches. Weight, ... pounds. Area, ... square inches. Volume, ... cubic inches; ..... cubic feet. Weight, ... pounds per cubic foot. Ultimate load, ... pounds. Ultimate strength, ... pounds per square inch. Initial coefficient of elasticity, ... Range of linear value, ... pounds per square inch. Probable ultimate unit deformation, ... Bedding in machine, ... For character of concrete and corresponding test piece see Batch report Bm .....

Cylinders and cubes brought from damp closet at .....; weighing, measuring, and capping finished at ....., time .....; test of cylinders started at .....; test of cylinders completed at ....., time .....; sheet handed to office at ....., time .....; delay, ..., due to .....

Remarks.—.....

Computations.—The compressive strengths of the cubes and the cylinders are calculated in pounds per square inch. For the cylinders the modulus of elasticity is determined by drawing a curve showing the values at different loads. A tangent to the curve at or near its origin is assumed to represent the initial modulus of elasticity.

BOND TEST PIECES.

Method.—The schedule of bond tests is shown in the table on pages 40–47. A bond test piece in the machine ready for testing is shown in Pl. XVIII, *B*. The concrete cylinder is placed on top of the machine with the embedded rod projecting downward. The lower end of the rod is gripped in the jaws of the machine. The lower surface of the concrete cylinder is embedded in plaster of Paris on a ½-inch plate with a hole in its center one-sixteenth inch greater in diameter than the rod which passes through it. The instrument for measuring the slip of the rod is shown at the top of the test piece in the figure. During the test the micrometer and load are read at intervals of about 500 pounds until the slip of the rod amounts to about one-tenth inch. The load in all cases is applied continuously until failure. The bond pieces are tested at the ages of 30, 90, 180, and 360 days.

Computations.—Form N is used for recording results of the bond tests.

Form N. { UNITED STATES GEOLOGICAL SURVEY. STRUCTURAL-MATERIALS TESTING LABORATORIES. } BOND TEST.

Bond reg. No. ..... Lab. No. ..... Diameter of embedded rod, ... inches. Embedded length of rod, ... inches. Embedded surface, ... square inches. Reg. No. of rod ..... Elastic limit, ... pounds per square inch. Yield point, ... pounds per square inch. Load at first slip, ... pounds. Unit bond stress at first slip, ... pounds per square inch. Maximum load, ... pounds. Maximum unit bond stress, ... pounds per square inch. Unit stress in steel at first slip, ... pounds. Unit stress in steel at maximum load, ... pounds. Condition of surface of embedded steel, ... Condition of surface of steel when pulled from concrete, ... For character and proportions of concrete see Batch report Bm ..... Bedding of test piece .....

Remarks.—.....

The unit bond at any load is found by dividing the load by the surface area of the rod in contact with the concrete.

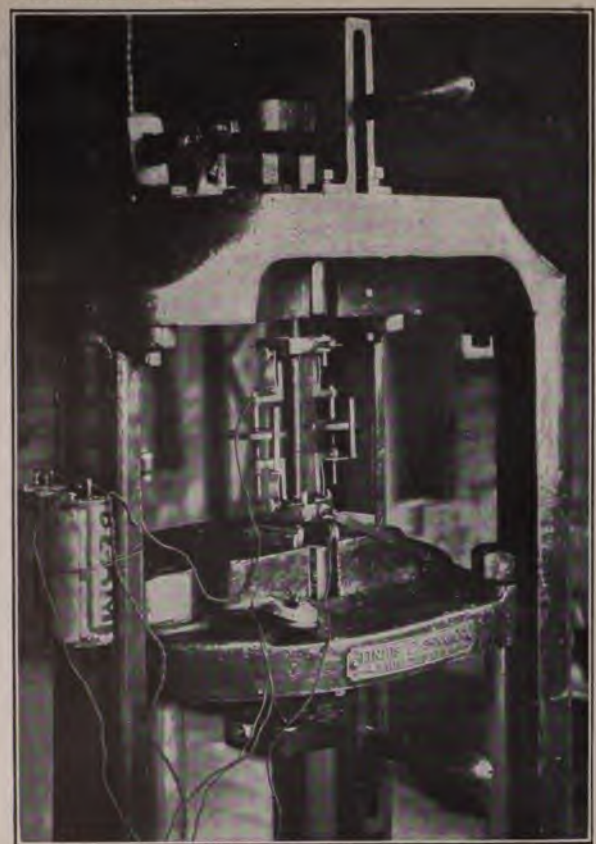

A. HENNING STEEL EXTENSOMETER FOR MEASURING ELONGATION OF STEEL.

B. METHOD OF MAKING BOND TEST.

Micrometer at top for measuring slip of rods.

TESTS OF STEEL.

Method.—As may be seen in the tables (pp. 38, 40–47), every rod used for reinforcement is tested. The tests include the determination of the yielding point as seen from the drop of the beam, the elastic limit obtained by the divider method, and the ultimate strength, elongation, reduction of area, and breaking strength. The elastic limit is determined on a gage length of 8 inches, one point of the dividers resting in a punch mark and the other marking on chalk rubbed on the surface of the test piece. The elongation is measured on the gage length of 8 inches. In addition to the above, the modulus of elasticity is determined on every tenth bar, using the Henning extensometer with electric contact. The percentage of carbon, phosphorus, and sulphur in every bar is determined in the chemical laboratory.

A view of the steel ready for testing is shown in Pl. XVIII, *A*.

Computations.—A record of steel tests is kept on a log sheet similar to Form E (p. 34). After the computations have been made the results are entered in Form O. The unit stresses at different loads are calculated by dividing the gross load by the area of the test piece.

The percentage elongation in 8 inches and the reduction of area at fracture are also calculated.

The modulus of elasticity is determined by dividing any unit stress below the elastic limit by the unit elongation at that stress. The elongations as obtained by the two micrometers on either side of the test piece are averaged and divided by the gage length to obtain the unit elongation.

Form O. { UNITED STATES GEOLOGICAL SURVEY. STRUCTURAL-MATERIALS TESTING LABORATORIES. } STEEL REPORT.

Station..... Reg. No..... Approved.....

Kind of bar	.....	Unit stress, pounds per square inch.	(*a*) At elastic limit	.....
Marks on bar and coupon	.....		(*b*) At yield point	.....
Dimensions, inches	.....		(*c*) At maximum load	.....
Area, square inches	.....		(*d*) At breaking load	.....
Cold bend test	.....	Per cent elongation in 8 inches		.....
Load in pounds. (*a*) At elastic limit	.....	Diameter of neck in inches		.....
(*b*) At yield point	.....	Per cent reduction in area		.....
(*c*) At maximum load	.....	Character of fracture		.....
(*d*) At breaking load	.....	Condition of surface		.....

Remarks......

SHEAR AND TENSION SECTION.

OUTLINE OF INVESTIGATIONS.

Shear.—A schedule of the tests on the strength of concrete in shear is given in the subjoined table (p. 67). The test pieces are cylinders 6 inches in diameter and 18 inches long. The molds are similar to those for making the regular compression cylinders, differing only in size. The testing apparatus is operated between the heads of the Universal testing machine, and the three cutting tools are arranged to shear out a section ranging from 12 to 2 inches in thickness. Only the top half of the 2-inch piece is used. The 4- and 6-inch pieces can be used with the bottom piece so as to incase the whole section. The object of these bottom pieces is to prevent any bending action in the test piece for the larger sizes. The results thus far obtained seem to indicate that this precaution is unnecessary. Pl. XIX, *A*, shows a

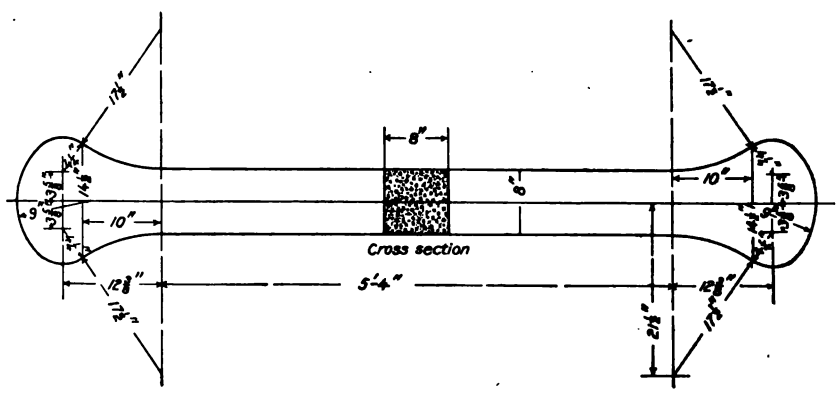

FIG. 5. Specimen for concrete tension tests.

test piece in the machine ready for testing. The diameter of the bearing surfaces is 6¼ inches and the ⅛-inch space between the test piece and the castings is filled with plaster of Paris. A spherical bearing block is placed on the top of the cutting tool. The bed plate is slotted so that the end support of the cylindrical test piece may be adjusted for any width of cutting tool.

Tension.—A schedule for determining the modulus of elasticity and strength of concrete in tension is shown in the table (p. 67). The test pieces will be of the flat dumb-bell shape, about 8 feet long over all, having a stem 8 by 8 inches in cross section. One of these test pieces is shown in fig. 5, and the grip or apparatus for testing it is shown in fig. 6. The grip is constructed by bending an 8-inch channel so as to inclose the head of the test piece and to bear against the inner surfaces of the head. The two sides of the channel are kept from spreading apart by plates extending from side to side. One of the plates is riveted to the flanges of the channel; the other is held

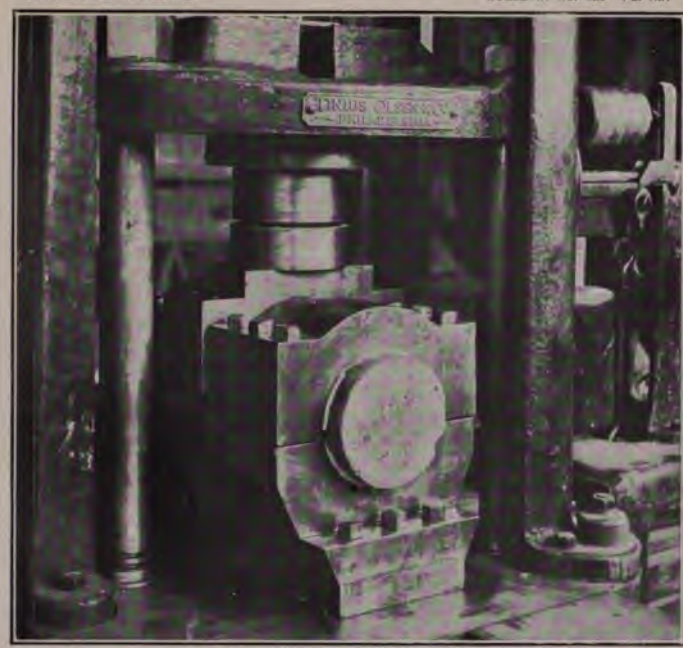

A. SHEAR SPECIMEN IN MACHINE READY FOR TEST.

B. INTERIOR VIEW OF STORAGE ROOM, BUILDING-BLOCK SECTION.

by bolts so that it can be taken off for the purpose of placing and removing the test piece.

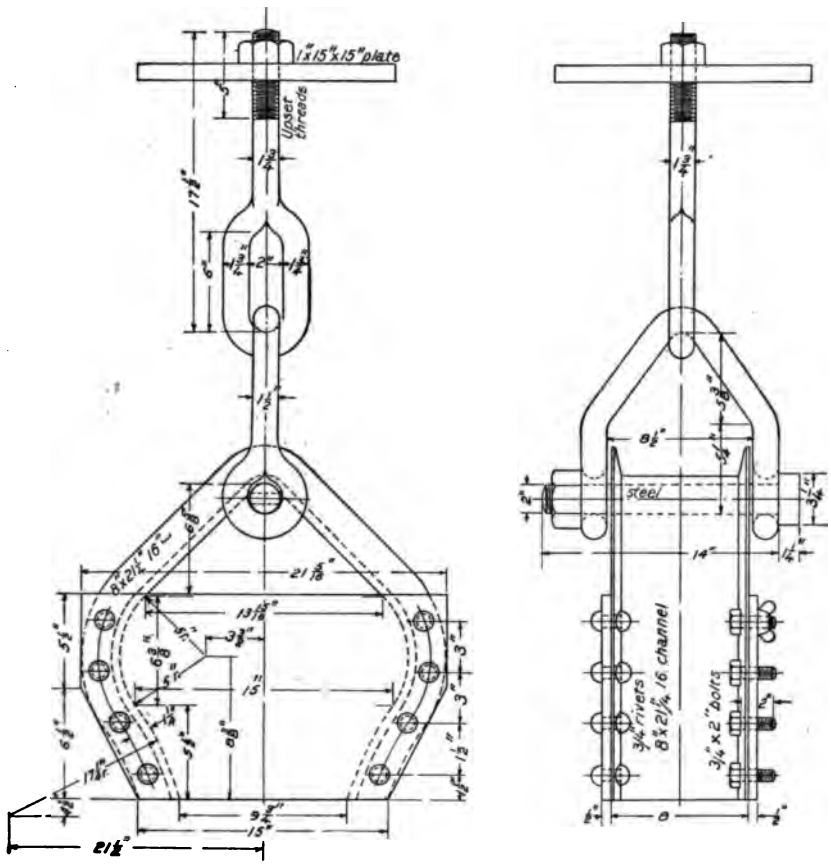

FIG. 6.—Apparatus for concrete tension tests.

Shear and tension tests proposed for 1907.

Test.	Form of specimen.	Concrete (proportions by volume).			Variables.	Age when tested (days).	Number of pieces.
		Cement (1).	Sand (2).	Aggregate (4).			
Shear:							
Series No. 1.	6-inch cylinder {18 / 24} inches long.	Standard.	Meramec River.	Limestone; gravel; cinders.	Consistency, and length to be sheared.	28	81
Series No. 2.[a]	6-inch cylinder 18 inches long.	Standard.	Meramec River.	Gravel; cinders; granite.	Consistency,[b] and age when tested.	28, 90 180, 360	84
Tension ...	Dumb-bell shape; uniform, 8 by 8-inch section; 5 feet long.	Standard.	Meramec River.	Gravel; cinders; granite.	Consistency,[b] and age when tested.	28, 90 180, 360	84

[a] Length to be sheared to be determined from series 1.
[b] Only one consistency used for granite specimens.

MIXING, MOLDING, AND STORAGE.

The specimens for the shear and tension tests are mixed, molded, and stored under the same conditions as in the case of beams (pp. 48–53).

COMPUTATIONS.

The unit shearing stress is found by dividing one-half the shearing load by the area of a vertical section of the test piece. For the tension tests the dimensions of the section and the distance of the break from the center will be given, besides a complete record of the usual information regarding the making of the test pieces. The unit strength and the initial modulus of elasticity will be calculated from the results.

A series of parallel tests will be made, including a cylinder for compression tests, so that values for a particular lot of concrete will be obtained, giving the strength in shear, in tension, and in compression, and also the modulus of elasticity for tension and for compression. In the report a complete record will be given of all the materials used in making the test pieces, together with a record of the conditions governing the making, storing, and testing.

BUILDING-BLOCK SECTION.

OUTLINE OF INVESTIGATIONS.

In the building-block section an extensive series of investigations on the properties of building blocks is under way. Five different types of building blocks are used. They are made up of different proportions and different aggregates and are tested at different ages. With each series of blocks a set of cylinders 8 inches in diameter and 16 inches in length are made, and these are stored under the same conditions as the blocks. The blocks are subjected to strength tests in cross bending and compression, and to fire tests to determine what aggregates and proportions offer the greatest resistance to fire.

A large number of mortar blocks have been made and many of these have been tested. The schedule of tests now under way comprises the manufacture on five different types of block, mixed in proportion of 1 part typical Portland cement to 2, 4, and 8 parts Meramec River sand, and of damp, medium, and wet consistencies. The strength tests cover periods of 28, 90, 180, and 360 days. This series necessitates the making and testing of 720 blocks and 360 cylinders.

In the case of blocks made of concrete, which include aggregates of limestone, gravel, granite, and cinders, proportions of 1:2:4, 1:2:5, and 1:3:6 are used. For convenience in handling, all volumes are reduced to weight and all materials are charged into the mixer by weight.

INTERIOR VIEW OF THE MIXING AND MOLDING AND THE TESTING ROOMS, BUILDING-BLOCK SECTION.

The consistencies which are indicated by the terms damp, medium, and wet are defined as follows: (1) In damp consistency the per cent of water used gives the driest mixture which can be used in all five types of block machines; (2) medium consistency is halfway between the damp and the wet consistencies; (3) in wet consistency the per cent of water used gives the wettest mixture which can be used.

The five cement-block machines which are in use were loaned to the laboratories under an arrangement made by a committee of the United Concrete Block Machine Manufacturers' Association, through the courtesies of the following companies: American Hydraulic Stone Company, Denver, Colo.; Miracle Pressed Stone Company, Minneapolis, Minn.; P. B. Miles Manufacturing Company, Jackson, Mich.; Dykema Company, Grand Rapids, Mich.; Century Machine Company, Jackson, Mich. These machines are shown in Pl. XX.

PROGRAMME OF INVESTIGATIONS.

The programme that has been adopted as a suggested outline covering all the investigations of mortar and concrete blocks is as follows:

I. VARIABLES IN THE MANUFACTURE OF BLOCKS UNDER INVESTIGATION.

A. *Type of wall block—all plain face and standard ends:*

1. With facing.
   - *a.* One-piece wall block.
     - (1) Hollow block.
       - (a) Down face.
         - x. Single air space.
         - y. Double air space.
       - (b) Side face.
         - x. Single air space.
         - y. Double air space.
     - (2) Solid block.
       - (a) Down face.
       - (b) Side face.
   - *b.* Two-piece wall block.
     - (1) With metallic bond.
     - (2) Without metallic bond.
2. Without facing.
   - *a.* One-piece wall block.
     - (1) Hollow block.
       - (a) Down face.
         - x. Single air space.
         - y. Double air space.
       - (b) Side face.
         - x. Single air space.
         - y. Double air space.

A. *Type of wall block—all plain face and standard ends*—Continued.

2. Without facing—Continued.
   - *a.* One-piece wall block—Continued.
     - (2) Solid block.
       - (a) Down face.
       - (b) Side face.
   - *b.* Two-piece wall block.
     - (1) With metallic bond.
     - (2) Without metallic bond.

B. *Materials used:*

1. Cement, typical Portland.
2. Aggregate.
   - *a.* Single.
     - (1) Sand.
     - (2) Limestone.
     - (3) Granite.
     - (4) Gravel.
     - (5) Cinder.
   - *b.* Double, consisting of sand and—
     - (1) Limestone.
     - (2) Granite.
     - (3) Gravel.
     - (4) Cinder.

I. VARIABLES IN THE MANUFACTURE OF BLOCKS UNDER INVESTIGATION—continued.

C. *Dimensions of specimen:*
1. Outside.
   a. 8 by 8 by 16 inches.
   b. 9 by 12 by 24 inches.
2. Web—1½ to 3 inches.
3. Air space—30 to 33⅓ per cent.

D. *Consistency:*
1. Damp.
2. Medium.
3. Wet.

E. *Proportions:*
1. Mortar.
   a. 1:2.
   b. 1:4.
   c. 1:8
   d. Balanced proportions for waterproofing.
2. Concrete.
   a. 1:2:4.
   b. 1:2:5.
   c. 1:3:6.
   d. Balanced proportions for waterproofing.

F. *Process of manufacture:*
1. Mixing.
   a. Hand.
   b. Machine.
2. Molding.
   a. Wet mixture—cast in molds in which test pieces remain until hard set.
      (1) Sand molds.
         (a) Poured without vibration.
         (b) Poured with vibration.
      (2) Metal molds.
         (a) Poured without vibration.
         (b) Poured with vibration.

F. *Process of manufacture*—Continued.
2. Molding—Continued.
   b. Damp and medium mixtures—cast in molds from which specimens are removed before hard set.
      (1) Hand tamped.
      (2) Power tamped.
         (a) Air.
         (b) Mechanical.
            x. Single application.
            y. Repeated application.

G. *Curing:*
1. Natural.
   a. Air.
   b. Air and sprinkling.
2. Artificial.
   a. Submerging.
   b. Steam.
      (1) Low pressure.
         (a) With CO_2.
         (b) Without CO_2.
      (2) High pressure.
         (a) With CO_2.
         (b) Without CO_2.

H. *Aging:*
1. Blocks that are fired.
2. Blocks that are not fired.
   a. 4 weeks.
   b. 13 weeks.
   c. 26 weeks.
   d. 52 weeks.

J. *Use of waterproofing compounds:*
1. Applied to surface.
2. Added to material.
   a. Body.
   b. Facing.

II. PROPERTIES TO BE INVESTIGATED.

A. *Strength:*
1. Transverse.
   a. Type.
   b. Material used.
   c. Dimensions of specimens.
   d. Consistency.
   e. Proportions.
   f. Process of manufacture.
   g. Curing.
   h. Aging.
   j. Use of waterproofing compounds.

A. *Strength*—Continued.
2. Compression.
   a. Type.
   b. Material used.
   c. Dimensions of specimens.
   d. Consistency.
   e. Proportions.
   f. Process of manufacture.
   g. Curing.
   h. Aging.
   j. Use of waterproofing compounds.

II. PROPERTIES TO BE INVESTIGATED—continued.

A. *Strength*—Continued.

3. Shearing.
   - *a.* Type.
   - *b.* Material used.
   - *c.* Dimensions of specimens.
   - *d.* Consistency.
   - *e.* Proportions.
   - *f.* Process of manufacture.
   - *g.* Curing.
   - *h.* Aging.
   - *j.* Use of waterproofing compounds.

B. *Permeability:*
   - *a.* Type.
     - (1) Block.
     - (2) Special test piece.
   - *b.* Material used.
   - *c.* Dimension of specimens.
   - *d.* Consistency.
   - *e.* Proportions.
   - *f.* Process of manufacture.
   - *g.* Curing.
   - *h.* Aging.
   - *j.* Use of waterproofing compounds.

C. *Absorption:*
   - *a.* Type.
   - *b.* Material used.
   - *c.* Dimensions.
   - *d.* Consistency.
   - *e.* Proportions.
   - *f.* Process of manufacture.
   - *g.* Curing.
   - *h.* Aging.
   - *j.* Use of waterproofing compounds.

D. *Efflorescence:*
   - *a.* Type.
   - *b.* Material used.
   - *c.* Dimensions of specimens.
   - *d.* Consistency.
   - *e.* Proportions.
   - *f.* Process of manufacture.
   - *g.* Curing.
   - *h.* Aging.
   - *j.* Use of waterproofing compounds.

E. *Fire-resisting properties:*

1. Fired and cooled in air.
   - *a.* Type.
   - *b.* Material used.
   - *c.* Dimensions of specimens.
   - *d.* Consistency.
   - *e.* Proportions.
   - *f.* Process of manufacture.
   - *g.* Curing.
   - *h.* Aging.
   - *j.* Use of waterproofing compounds.
2. Cooled by spraying with water.
   - *a.* Type.
   - *b.* Material.
   - *c.* Dimensions of specimens.
   - *d.* Consistency.
   - *e.* Proportions.
   - *f.* Process of manufacture.
   - *g.* Curing.
   - *h.* Aging.
   - *j.* Use of waterproofing compounds.

MIXING AND MOLDING.

Method.—The mixing is performed in the same manner as described under "Beam section" (pp. 48–50). The mortar entering the blocks that have been made has been so dry that the forms could be removed as soon as the tamping was completed. Two men are employed in molding the blocks—one to shovel the material into the molds and one to tamp. The concrete is put in the molds in 3-inch layers and tamped with a hand or pneumatic tamper, care being taken to tamp all the blocks in the same manner and the same length of time.

As soon as the tamping is finished, the sides of the forms are removed and the block is weighed and placed in the moist storage room. The weight of the blocks in any one batch is not permitted to vary more than 1 per cent. After the sides of the molds are removed the blocks are allowed to remain on the bottom for sixty

hours. At the end of this time they are marked and piled in the order in which they are to be tested.

Apparatus.—All the mortar and concrete used in the tests are mixed in a one-half cubic yard Chicago cube mixer, which is mounted on skids and is motor driven. The discharging end of the mixer appears in the background at the left in Pl. XX, which shows the mixing and molding room. Through the open doorway near the center of the picture can be seen the testing room. The water used is weighed in the barrel resting on the platform scales, the process being similar to that described under "Constituent-materials section" (p. 32).

STORAGE.

One of the moist rooms for the storage of blocks and cylinders is shown in Pl. XIX, *B*. There are two of these rooms, which are lined with moisture-proof paper and furnished with water and steam sprinklers near the ceiling. The specimens are sprinkled at regular intervals of eight hours. The five different types of blocks and corresponding cylinders may be seen in Pl. XIX, *B*.

STRENGTH TESTS.

Apparatus.—The strength tests of the blocks and corresponding cylinders are made on a 200,000-pound 4-screw motor-driven testing machine, a portion of which will be seen through the doorway in Pl. XX.

The blocks are first tested for transverse strength on a span of 20 inches, the load being applied at the center of the span. Pl. XXI, *A*, shows a building block in the testing machine ready for application of the load. An isometric drawing of each block is given to the operator and the position of the break is sketched upon the drawing, the distance of the break from one end of the block being measured and recorded on the drawing.

The two pieces of the block resulting from the transverse test are placed in the testing machine one at a time and tested for compressive strength. A half block ready for testing is shown in place in the testing machine in Pl. XXI, *B*. The top and bottom of the block are bedded with thick sheets of asbestos, and the spherical bearing block (*a*) assures an even distribution of the load.

Before these halves are tested, the top and bottom surfaces of each are traced, full size, on large sheets of paper for the purpose of getting the least area subjected to compressive stress. The load at the first crack and the breaking load are recorded.

The ends of the cylinders are smoothed off with plaster of Paris and are tested as described under "Constituent-materials section" (pp.

A. BUILDING BLOCK IN MACHINE READY FOR TRANSVERSE TEST.

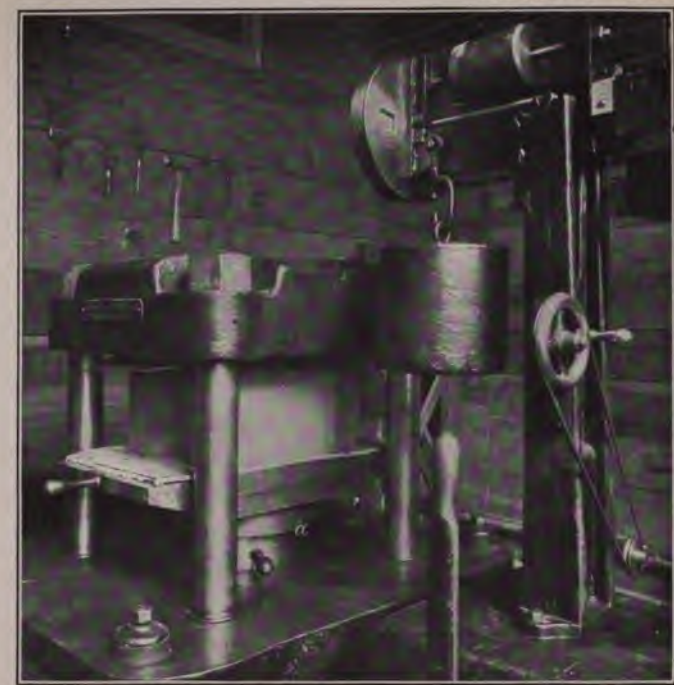

B. ONE-HALF OF BUILDING BLOCK IN MACHINE READY FOR COMPRESSION TEST.

31–36). The load at the first crack, the ultimate load, and compressometer readings for increasing loads are recorded.

Forms and computations.—The results of the preceding tests are entered on Form P.

Form P. { UNITED STATES GEOLOGICAL SURVEY, STRUCTURAL-MATERIALS TESTING LABORATORIES. } BLOCK TESTS.

Station..... Approved:.....
Description of block..... Age ..... days.
Breadth ..... inches. Depth ..... inches. Length ..... inches. Span ..... inches.

TRANSVERSE STRENGTH.

Reg. No.	Previous treatment.	Breaking load (pounds).	Manner of failure.	Mod.	Date of test.
.....	.....	.....	.....	.....	.....
.....	.....	.....	.....	.....	.....

COMPRESSIVE STRENGTH.

Reg. No.	Previous treatment.	Crushing area (square inches).	Crushing load (pounds).	Compressive strength (pounds per square inch).	Date of test.
.....	.....	.....	.....	.....	.....
.....	.....	.....	.....	.....	.....

The modulus of rupture is computed by means of the formula $S=\frac{M_c}{I}$, substituting for M and I their values at the center of the block. The unit compressive strength of each half is found by dividing the greatest load by the least area of the piece tested. The area is found by using a planimeter on the outline sketched just before the test.

FIRE TESTS.

Outline of investigations.—A preliminary series of investigations of the fire-resisting qualities of structural materials has been inaugurated in connection with the work of the building-block section. These investigations comprise tests upon the various types and kinds of blocks of concrete, and the various building stones, burned clay, cement, sand-lime brick, and terra cotta found in the vicinity of Chicago. Portions of the plain concrete beams after testing have been sent to Chicago with the cement building blocks, while the other materials have been purchased in Chicago. The tests on panels of terra cotta have included the tile used for fireproofing and partition work and for ornamental work. In the case of terra-cotta tile partition panel tests have been made on both the plastered and unplastered tile. These tests have all been completed and are being gotten into shape for publication.

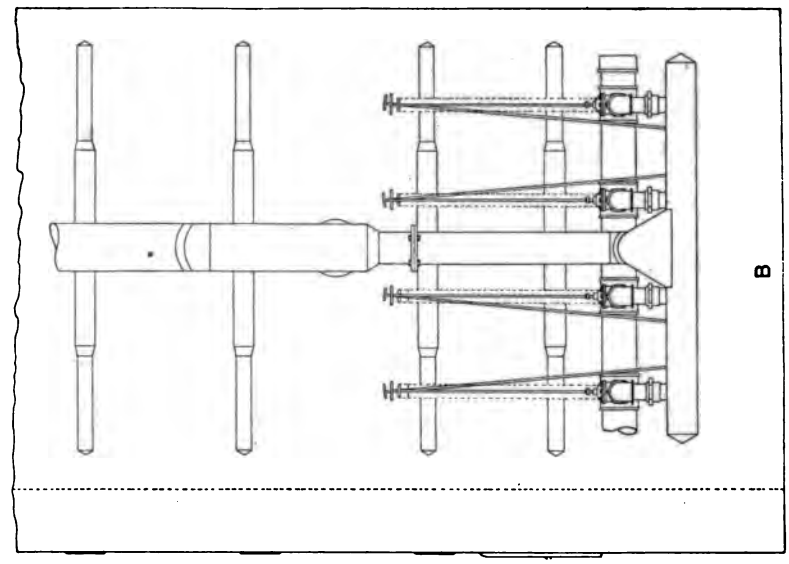

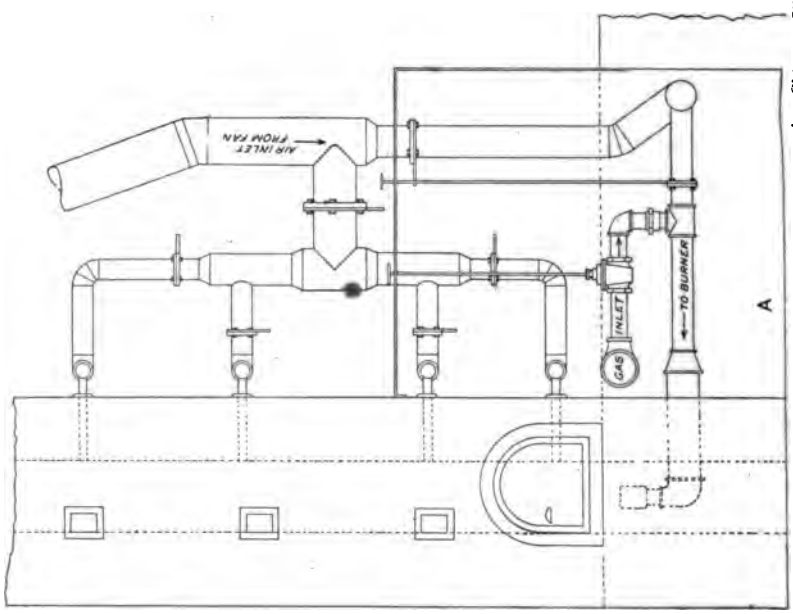

FIG. 7.—Fire-test furnace of the Underwriters' Laboratories, Chicago, Ill. A, Side elevation, showing piping; B, rear elevation, showing piping.

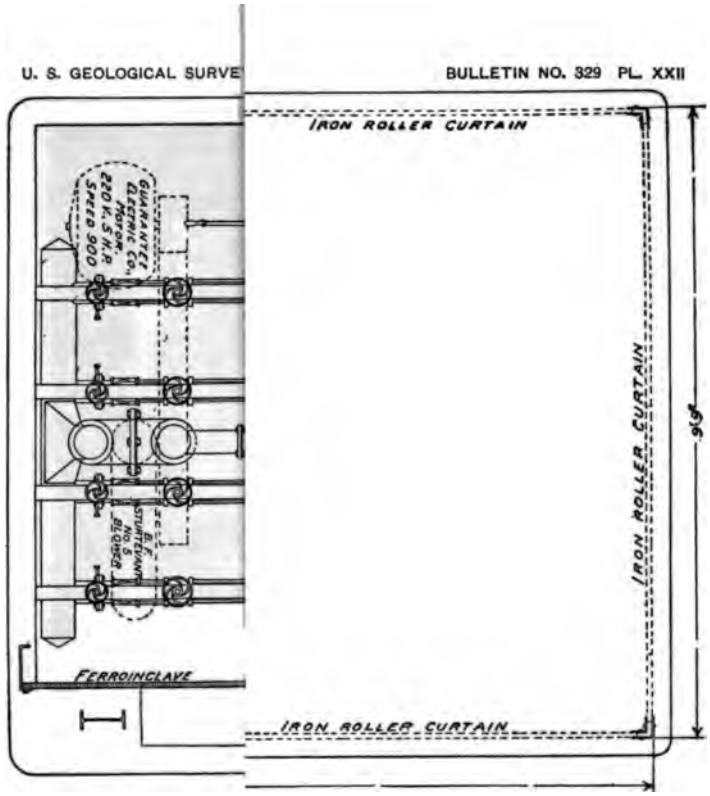
IRON ROLLER CURTAIN
GUARANTEE ELECTRIC CO. MOTOR 220 K.S.H.P. SPEED 600
E.E.E. STURTEVANT MOTOR BLOWER
FERROINCLAVE
IRON ROLLER CURTAIN
IRON ROLLER CURTAIN
96'

ILL.

A

B

HEATING CHAMBER, UNDERWRITERS' LABORATORIES, CHICAGO, ILL.

A, Interior view, showing water pyrometer; *B*, General view, showing regulating apparatus for gas and air.

Methods.—The cement blocks tested were made at the laboratories at St. Louis and were stored there in the moist room until about two weeks before they were to be tested, when they were packed in straw in a refrigerator car and, in the case of a batch shipped during the winter, live steam was injected into the car, which was then sealed. Upon reaching Chicago the blocks were removed to the Underwriters' Laboratories and stored in a warm, dry room until tested. The length of this storage was from two to ten days.

This preliminary series of fire tests is being made in the fire-test furnace of the Underwriters' Laboratories in Chicago, a sectional plan of which is shown in Pl. XXII, and elevations of which are shown in fig. 7. Pl. XXIII, *B*, shows a general view of the heating chamber. The valves for regulating the supply of gas and air are shown in the foreground. The motor and fan for the air blast are located in the compartment above the valves. The door through which the gas is lighted and the isinglass peepholes for observing the progress of the tests are shown at the left of the chamber.

The test pieces are laid with fire clay in the opening in the steel-frame, fire-brick-lined hanging door shown in Pl. XXIV, *A*. When the fire clay has hardened, the rolling door is drawn into the furnace by means of a winch, shown at the left of the chamber in Pl. XXIII, *B*. The door is held in place in the chamber by means of a latch. When the test is completed, the latch releases the door and it is quickly drawn out of the chamber by means of the weight shown near the ground at the right in Pl. XXIII, *B*, and at the left in Pl. XXIV, *A*. When the blocks have been placed in the opening, the door has the appearance shown in Pl. XXIV, *A*. The door is drawn into the chamber, so that it is about 2 feet from the burners. A view of the interior of the fire chamber, showing the burner wall, is shown in Pl. XXIII, *A*, and at the right in Pl. XXIV, *A*. Gas is admitted through holes below the floor level. The openings in the brick wall are for the purpose of admitting air to the fire chamber. The piping shown on the face of the wall is a water pyrometer.

The door is fired for two hours, the temperature being kept as nearly uniform over the door as the adjustment of the furnace permits, or within about a 5 per cent variation. The temperature is brought to 925° C. in about thirty minutes, and is maintained at that point one and one-half hours longer.

The temperature of the heating chamber is determined by means of four thermocouples placed symmetrically 6 inches from the back wall of the heating chamber. The temperature of the face of the test pieces is determined by means of six thermocouples symmetrically placed on the face of the blocks, against which the flames

impinge. These thermocouples are laid in fire-clay tubes in the joints, with the points one-sixteenth inch back of the face of the wall, these ends being protected from the direct heat by a coating of fire clay. Readings on all ten couples are taken at intervals of ten minutes by means of an Englehardt galvanometer.

Five thermometers are hung on the back of the wall for the purpose of determining the rate of heat transmission. The bulbs are held against the blocks by covering them with fire clay, which prevents the cooling effects of air currents.

After the door has been subjected to the heat for two hours the gas is turned off and the door is removed from the chamber. In some of the tests the blocks are allowed to cool slowly in air, and in others they are cooled suddenly by water.

The quenching test consists in directing a stream of water against the hot blocks. The door can be run out of the furnace and the water applied in about thirty or forty seconds after the gas has been turned off. The stream is played for five minutes through a $\frac{7}{8}$-inch nozzle at a distance of 20 feet from the door and at a pressure of 50 pounds per square inch. (See Pl. XXIV, *B*.)

After the blocks tested in the recent series were sufficiently cool they were removed to the Armour Institute, and, by the courtesy of Prof. R. Burnham, in charge, they were tested for transverse and compressive strength, using the same methods as those used at the laboratories in St. Louis.

Form Q is used for recording the results of the fire tests.

Form Q. { UNITED STATES GEOLOGICAL SURVEY. STRUCTURAL-MATERIALS TESTING LABORATORIES. } FIRE TEST.

Station..... Reg. No..... Approved:..... Date..... Duration..... Manner of cooling.....
Arrangement of blocks in furnace.....
Condition of blocks after the test.....

Time.	Temp. (°C.)	Temperature observations (to include both faces).
.....	.....	.....
.....	.....	.....
.....	.....	Max. temperature.....
.....	.....	Water test..... minimum at..... pound per square-inch pressure.

PERMEABILITY SECTION.

Outline of investigations.—The programme for the permeability investigations includes a preliminary series for the purpose of determining the best method of procedure. The subsequent series covers tests on cement mortars and concretes—those treated with waterproofing coatings and those in which different kinds of waterproofing compounds have been incorporated. Different mixtures, consistencies, and thicknesses are used and the specimens are tested *at different ages.* Tests will be made on specimens treated with

A. FIRE DOOR FILLED WITH BUILDING BLOCKS READY FOR TEST.

B. APPLICATION OF WATER JET TO TEST PANEL AFTER FIRE TREATMENT.

all the available waterproofings, including powders and liquids for incorporation in the mixture and also for exterior application.

In addition, 2-inch cubes of mortar and concrete will be made and tested for porosity in order to find the relation between porosity and permeability.

Apparatus.—The apparatus for these tests is shown in Pl. XXV and fig. 8.

The arrangement for holding the test piece and the can for catching the water that passes through it are shown in Pl. XXV, *A*. The piece of apparatus shown at the right is placed on top and that next is placed on the bottom of the test piece, with rubber washers between each cap and the test piece. A test piece is shown just to the right of the can. A cross section of the apparatus for holding the test piece, with a test piece in it, is shown in fig. 8. The water is applied to the top of the test piece through the pipe *C;* the distance *Y* is the height of the test piece, and *A* shows the position of the rubber washers at the top and at the bottom of the test piece. The water that passes through the test piece is measured, being caught in the can *B* attached to the bottom of the casting that holds the test piece.

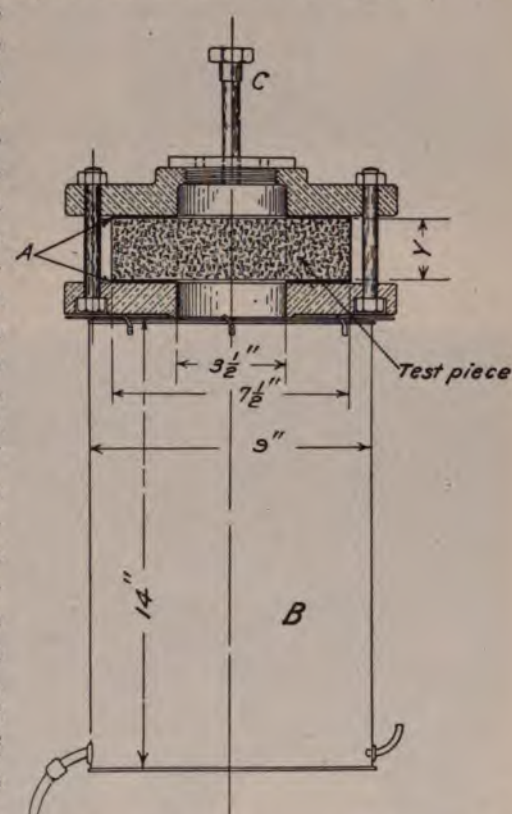

FIG. 8.—Cross section of apparatus for holding permeability test pieces.

A view of the room used for this work, with two permeability tests under way, is shown in Pl. XXV, *B*. Twelve tests can be carried on at once. A diagram of the apparatus, with pipe connections, is shown in fig. 9.

The water passes through the filter *A* and into the tank *B*, from which it is fed to the test pieces attached at the pipe connections. Tank *D* is connected to the air compressor on the floor below and is used to equalize the variable pressure of the compressor. The air is introduced above the water tank *B* at the point *E*. The pressure

of the water is read at gage *F*, and of the air at gage *G*. The molds for the test pieces are short sections of iron pipe of 7½ inches internal diameter and of varying lengths.

Method.—The mortars and concretes used in the permeability tests are mixed on a glass-top table. The material is firmly pressed into the mold by hand, the object being to do as little tamping as possible in order to prevent the flushing of cement to the surface. The top of the test piece is smoothed off level with the top of the mold by the use of a 10-inch flat trowel, and is then scraped rough at the surface so that it will have the same characteristics as the interior.

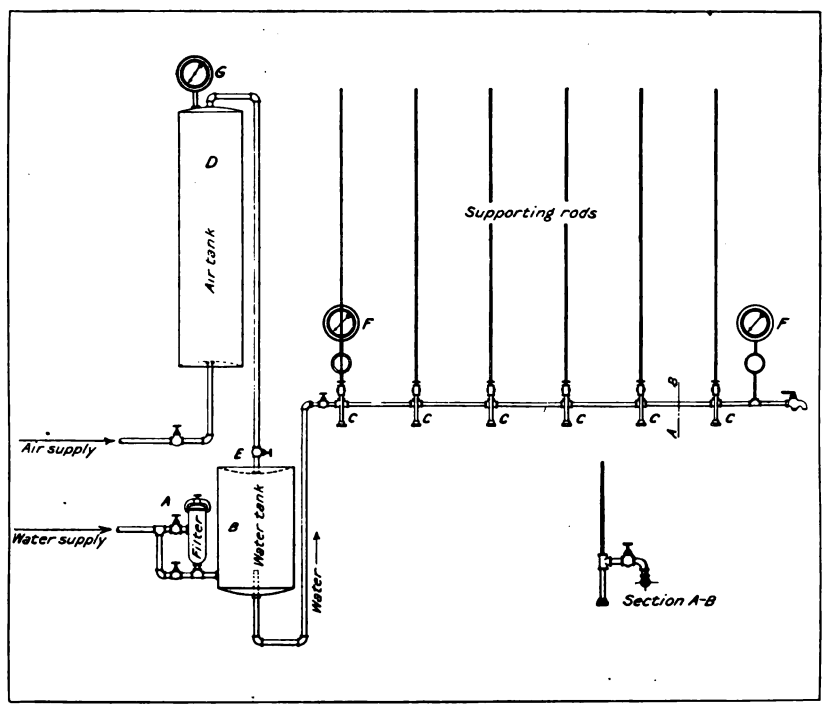

FIG. 9.—Diagram of permeability apparatus and connections.

The test pieces are stored in a moist room of the block section until ready for testing.

The test pieces are placed in water for forty-eight hours before being tested. Annular spaces at the outer edges of both the top and bottom surfaces are painted with a rubber waterproofing paint, leaving a circular area 5 inches in diameter in the center of the specimen in its original condition. Rubber washers are placed over the waterproofing and the specimen is securely fastened in the holder. The apparatus is then attached to the unions (*C*, fig. 8) and the water is turned on. In the present series a pressure of 20 pounds per square inch is maintained. Higher pressures are to be used in the subsequent series.

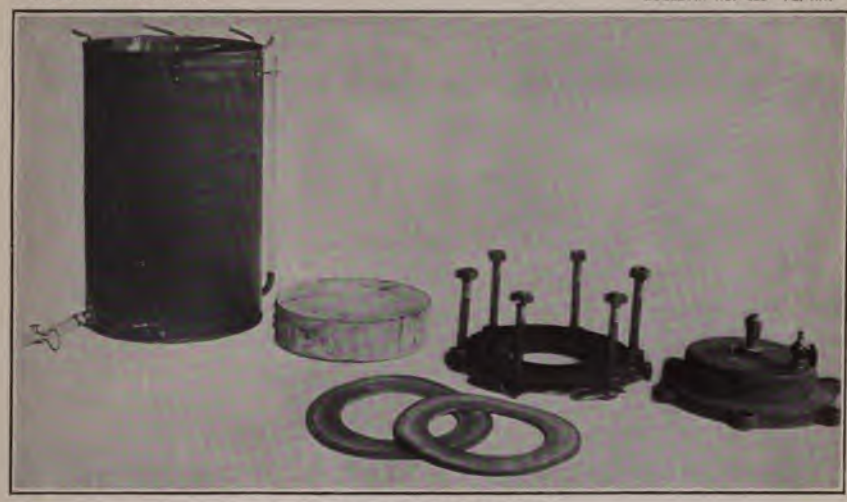

A. PERMEABILITY APPARATUS.

B. VIEW SHOWING PERMEABILITY TESTS AND METHOD OF SUPPORTING TEST PIECES.

Readings are taken at regular intervals of the amount of water passing through in one minute. The flow of water through the test piece diminishes as the test progresses and readings are accordingly taken at longer intervals until the flow of water becomes constant.

In testing the 2-inch cubes for absorption they are weighed after being thoroughly dried in a gas oven at 100° C. They are then placed in water for twenty-four hours and again weighed. The difference in weight is the absorption.

Forms.—The forms used for recording results of tests give the usual information concerning register number, consistency, etc., also the kind of waterproofing used, the thickness of the specimen, the weight of water absorbed, and the weight of water passing.

CHEMICAL SECTION.

OUTLINE OF INVESTIGATIONS.

The chemical laboratory is equipped with every facility for making the analyses which are required in the course of the investigations of structural materials. In addition to its work in connection with the structural-materials division the laboratory has been making a large number of analyses of cement-making materials (limestone, shales, etc.), for the Reclamation Service.

An annex to the main laboratory communicates with a combustion room, a sampling and storage room, a balance room, and an office. The equipment is very complete and comprises analytic balances, pulp balance, copper still, electric stirring apparatus, gas retainer, carbon dioxide apparatus, oxyhydrogen blast lamps, muffles, and an ample supply of platinum, nickel, and glassware.

ANALYSES OF CONSTITUENT MATERIALS.

CEMENT.

In the analysis of cement the methods recommended by the committee on uniformity in the analysis of materials for the Portland cement industry of the New York section of the Society for Chemical Industry are used, with the following exceptions: In the analysis of cements the silica is not purified by treating with HFl and H_2SO_4. The precipitated iron and aluminum hydrates are dissolved in dilute HNO_3 instead of in dilute HCl; the ignited CaO is also precipitated from a HNO_3 solution the second time. Lastly, the SiO_2 is not determined in the ignited Fe_2O_3 and Al_2O_3.

SILT AND OTHER MATERIALS.

METHODS.

The methods used in the analysis of silt and other materials are those *described in Bulletin* No. 305 of the United States Geological

Survey, on the analysis of silicate and carbonate rocks, prepared by Dr. W. F. Hillebrand, with the following exceptions:

Moisture at 100° C.—A 1-gram sample of the silt is weighed out upon a small watch glass. It is heated for two hours at 105° C. in an air oven and is weighed after being allowed to cool in a desiccator. The loss in weight is checked by another heating for one hour in the oven.

Silica.—SiO_2 is usually not treated with HFl and H_2SO_4 to determine the Fe_2O_3 and Al_2O_3 which is invariably present; at the same time the Fe_2O_3 and Al_2O_3 are not evaporated with H_2SO_4 after the bisulphate fusion to determine the SiO_2 present in them. In the greater number of cases these two errors about counterbalance one another. The ferric oxide (Fe_2O_3) and alumina (Al_2O_3) are precipitated with ammonia, washed with hot water containing 20 grams ammonium nitrate per liter, dissolved in nitric acid, and reprecipitated. The Fe_2O_3 is reduced by zinc and not by hydrogen sulphide.

Manganese oxide.—MnO is determined by precipitating the hydrated MnO_2 with bromine water in the filtrate from the iron and alumina, filtering, igniting, and weighing as Mn_3O_4.

Total moisture.—One gram of the material is weighed out into a porcelain boat and placed in a piece of hard-glass combustion tube, which is contained in a combustion furnace of the ordinary type. This is preceded by a U-tube, one arm of which is filled with $CaCl_2$ and the other with soda lime; this is preceded by a bubble tube filled with H_2SO_4, and is followed by a U-tube filled with $CaCl_2$, which is followed by another of the same, serving as a safety tube. About five of the burners are lighted under the boat and the total H_2O driven out of the material. The H_2O is drawn through the tube by a current of air and is caught in the U-tube containing $CaCl_2$. The increase in weight of this gives the total H_2O—from which is subtracted the moisture—giving the H_2O above 100°. Necessarily the combustion tube must be heated and the whole train freed in this way from H_2O before the boat with the material has been inserted.

Carbon in organic matter.—One gram of the material is placed in the small beaker and 60 cubic centimeters H_2O and 10 cubic centimeters HCl added and warmed. The mixture is then filtered through a perforated platinum boat containing a mat of ignited asbestos. The boat is then dried at 100° and placed in a combustion tube contained in a 16-burner combustion furnace. This is preceded by a U-tube, one arm of which is filled with $CaCl_2$ and the other with soda lime, which is preceded by an absorption bulb filled with 1.20 specific gravity KOH and this preceded by a second combustion tube contained in a second furnace. This second tube can be connected either with a U-tube filled with $CaCl_2$ and soda lime, preceded by a *KOH bulb* filled with 1.20 specific gravity KOH, or with an oxygen

holder. The combustion tube in the first furnace is filled as follows: About 3 inches from one end (which becomes the posterior end in the furnace) is placed a plug of asbestos followed by 5 or 6 inches of coarse granulated CuO, then by 3 inches of ignited lead chromate and a second plug of asbestos, and the whole finally followed by a roll of silver foil about 1½ inches long. The second tube is filled in the same way except that about twice as much CuO is used and the silver foil is omitted. After the first tube there is placed a bubble tube filled with acid ($AgSO_4$) to catch any HCl not washed out of the boat. This is followed by a U-tube filled with $CaCl_2$, then an absorption bulb filled with 1.20 specific gravity KOH, to which is connected a $CaCl_2$ drying tube, and the whole is followed by a guard U-tube filled with $CaCl_2$. With all the burners in the furnace turned on full except the one at each end, a current of oxygen is drawn through the train for twenty minutes, then air is drawn through for ten minutes. The absorption KOH bulb following the first furnace with its connected $CaCl_2$ tube is then weighed. The increase in weight is equal to the CO_2 and this multiplied by 0.2727 gives C.

Necessarily, before placing the boat in the furnace, oxygen must be passed through it and all C burned completely out of it, a condition which is attained when there is no further increase in the weight of the absorption bulb.

SUMMARY.

The above methods apply equally well to shales, to clays, and to all high SiO_2 rock—also to limestone, but in this case only about 1 or 2 grams of the mixed carbonate of potassium and sodium are needed in the fusion.

Form R is used for recording the analyses.

Form R. { UNITED STATES GEOLOGICAL SURVEY. STRUCTURAL-MATERIALS TESTING LABORATORIES. } CHEMICAL ANALYSES.

Station..... Reg. No..... Approved:.....

Date..... Method of treatment of sample..... Moisture.....per cent.

Rocks—cement.				Steel.	
Ultimate analysis.		Rational analysis.			
	Per cent.		*Per cent.*		*Per cent.*
Silica (SiO_2)		Free silica		Total carbon (C)	
Alumina (Al_2O_3)		Clay substance			
Ferric oxide (Fe_2O_3)		Feldspathic substance.		Combined carbon	
Manganese oxide (MnO)					
Lime (CaO)		Ignition loss			
Magnesia (MgO)				Graphitic carbon	
Sulphuric anhydride (SO_3)					
Phosphoric oxide (P_2O_5)				Phosphorus (P)	
Alkalies {Soda (Na_2O)					
Alkalies {Potassa (K_2O)				Sulphur (S)	
Water at 100° C.					
Water above 100° C.				Manganese (Mn)	
Carbon dioxide (CO_2)					
Ignition loss				Silicon (Si)	
Total		Total			

Remarks.— .....

ANALYSIS OF STEEL.

All the steel used in the reinforced beams is analyzed. The percentages of carbon, phosphorus, and sulphur are determined by the usual methods and are recorded.

Carbon is determined by solution of steel in potassium cupric-chloride filtration and combustion of the residue. (Blair's "The Chemical Analysis of Iron," 6th ed., pp. 156–166.)

Phosphorus is determined by the volumetric method proposed by the subcommittee on methods of the International Steel Standard Committee of the United States. (Blair, pp. 92–104.)

Sulphur is determined by evolution as hydrogen sulphide and absorption in ammoniacal solution of hydrogen peroxide. (Blair, pp. 60–65.)

INVESTIGATIONS OF COLUMNS AND FLOOR SLABS.

A comprehensive series of tests is being inaugurated to investigate the properties of both plain and reinforced concrete columns ranging in length from 10 to 30 feet and in section from 8 to 12 inches.

A series of tests is being put into execution to investigate the properties of concrete slabs reenforced with steel of 10-foot span. The column tests have been delayed awaiting the arrival of the 600,000-pound testing machine, the installation of which will make it possible to proceed.

THE EFFECT OF ELECTROLYSIS AND SEA WATER ON CEMENT MORTARS AND CONCRETES.

In connection with the work of the laboratory at Norfolk, Va., there is being conducted a series of investigations covering (1) the effect of electrolysis on cement mortars and concretes, and (2) the effect of sea water on these materials. In this latter series of experiments test pieces are being made with sea water and immersed in sea water, made with fresh water and immersed in sea water, and a parallel series made with and immersed in fresh water. A series of parallel experiments will be carried on in St. Louis as to the effect of electrolysis on cement mortars and concretes. The cages in which these test pieces are stored are located at the end of what is known as the commercial pier, which extends about 1,500 feet from the shore, near the grounds of the Jamestown Exposition. The use of this pier has been obtained through the courtesy of the local authorities.

PROGRESS OF THE WORK.

PRELIMINARY WORK.

The appropriation for the first year's work amounted to $12,500, of which $5,000 was carried by the general deficiency bill and was available until June 30, 1905, and the balance, $7,500, was available until June 30, 1906.

The appropriation was made for the purpose of continuing the investigations started during the period of the Louisiana Purchase Exposition, and it was expected that light, heat, and power would be furnished by the fuel-testing division, which would considerably increase the funds available for actual testing work. During that year the work consisted principally of the investigations of the constituent materials of cement mortars and concretes, the work being carried on in the cement building now used by the constituent-materials section.

Late in the fall of 1905 the metal pavilion was occupied and was used for several months as a temporary storage house for the materials used in the investigations then pending. The funds for the work, however, were so small that it was necessary to reduce the force of men employed on this work in the spring of 1906, which brought it practically to a standstill until the new appropriation of $100,000 became available for the fiscal year beginning July 1, 1906. After this date the work was again taken up and greatly extended; the beam, building-block, and computing sections and a chemical laboratory were organized, and new equipment was purchased and installed.

PRESENT WORK.

During the fiscal year 1905–6 the work at the laboratories was greatly hampered by the removal of the buildings which formed a part of the Louisiana Purchase Exposition, which work extended through 1906 and well into 1907, and rendered it difficult to repair the buildings and to install the apparatus required in making the tests. This necessary work, however, was accomplished during the summer and fall of 1906, so that the work of the new divisions was well under way early in 1907.

During the fall of 1906 and the first half of 1907 many test pieces have been made and tested. Those made prior to July, 1907, aggregate 35,200, while the number of tests and determinations which have been made amount to 35,500.

The approximate number of test specimens made and tested is divided among the various sections as follows:

Constituent-materials section.—In the constituent-materials section there have been made 5,750 transverse specimens 1 by 1 by 13 inches; 8,700 two-inch cubes; 12,550 tensile briquets of 1-inch cross section; 870 cylinders 8 inches in diameter and 16 inches long; and 710 six-inch cubes. Of these there have been tested 3,650 transverse test pieces; 6,740 two-inch cubes, 540 six-inch cubes; 9,750 tensile briquets, and 600 cylinders. In addition to the above about 10,000 physical determinations of specific gravity, time of setting, soundness, mechanical analysis, etc., have been made.

Beam section.—In the beam section there have been made approximately 600 beams of plain and reinforced concrete, 8 inches wide, 11 inches deep, and 13 feet long; 600 six-inch cubes; 800 cylinders 8 inches in diameter and 16 inches long; and 110 bond specimens 8 inches in diameter and of varying lengths. Of these, there have been tested 290 beams, 280 cubes, 390 cylinders, and 40 bond test pieces. In addition to these about 2,500 steel tests have been made, and the modulus of elasticity has been determined on 250 of these.

Building-block section.—About 1,600 building blocks of standard size and 400 cylinders 8 inches in diameter and 16 inches long have been made, and of these 1,150 blocks and 200 cylinders have been tested.

Chemical section.—About 550 chemical analyses have been made.

FUTURE WORK.

The appropriation of $100,000 available for the fiscal year beginning July 1, 1907, insures a continuance of the work. Many new series, some of which have been outlined in this report, have been begun and will be continued during the coming year.

In addition to the work at these laboratories many tests are being made at technological institutions in cooperation with the United States Geological Survey, among which may be mentioned Columbia University, the University of Illinois, Purdue University, and the University of Wisconsin, the purpose of this cooperative work being to avoid all unnecessary duplication in work or unnecessary expenditures for equipment the temporary use of which could be obtained elsewhere.

The results of the tests are being rapidly worked up into reports for publication, which will be issued in bulletin form, each treating of a particular phase of the work at the structural-materials laboratories.

O

Bulletin No. 330 Series E, Chemistry and Physics, 54

DEPARTMENT OF THE INTERIOR
UNITED STATES GEOLOGICAL SURVEY
GEORGE OTIS SMITH, DIRECTOR

THE DATA OF GEOCHEMISTRY

BY

FRANK WIGGLESWORTH CLARKE

WASHINGTON
GOVERNMENT PRINTING OFFICE
1908

CONTENTS.

	Page.
INTRODUCTION	9
CHAPTER I. The chemical elements	12
Nature of the elements	12
Distribution of the elements	13
Relative abundance of the elements	21
CHAPTER II. The atmosphere	38
Composition of the atmosphere	38
Rainfall	44
The primitive atmosphere	49
CHAPTER III. Lakes and rivers	53
Origin	53
Statement of analyses	54
Springs	56
Changes of composition	57
Analyses of river waters	60
The St. Lawrence basin	60
The Atlantic slope	62
The Mississippi basin	64
Southwestern rivers	69
The Pacific slope	70
The Saskatchewan system	71
Summary for North America	72
Rivers of South America	73
Waters of western Europe	75
Rivers of central Europe	76
Rivers of Sweden	80
Russian waters	81
The Nile	82
Organic matter in waters	82
Contamination by human agency	84
Gains and losses in waters	86
Chemical denudation	87
CHAPTER IV. The ocean	91
Elements in the ocean	91
Composition of oceanic salts	94
Carbonates in sea water	98
Oceanic sediments	100
Potassium and sulphates	106
The chlorine of sea water	107
Age of the ocean	109
Dissolved gases	110
Influence of living organisms	115

Page.
CHAPTER V. The waters of closed basins 118
Preliminary statement 118
The Bonneville basin 118
The Lahontan basin 121
Lakes of California 124
Northern lakes 125
Central and South America 126
Caspian Sea and Sea of Aral 127
The Dead Sea 128
Other Russian and Asiatic lakes 130
Miscellaneous lakes 132
Summary 134
CHAPTER VI. Mineral wells and springs 139
Definition 139
Classification 140
Chloride waters 141
Sulphate waters 145
Carbonate waters 149
Waters of mixed type 150
Siliceous waters 151
Nitrate, phosphate, and borate waters 153
Acid waters 155
Summary of waters 157
Changes in waters 158
Calcareous sinter 159
Ocherous deposits 160
Siliceous deposits 161
Reactions with adjacent material 164
Vadose and juvenile waters 168
Thermal springs and volcanism 168
Bibliographic note 170
CHAPTER VII. Saline residues 172
Deposition of salts 172
Concentration of sea water 173
The Stassfurt salts 176
Other salt beds 182
Analyses of salt 183
Analyses of gypsum 184
Bitterns 184
Sodium sulphate 186
Miscellaneous desert salts 188
Alkaline carbonates 189
Borates 195
Nitrates 205
Alums 211
CHAPTER VIII. Volcanic gases and sublimates 212
Gaseous emanations 212
Sublimates 220
Occluded gases 224
Volcanic explosions 232
Summary 236

Page.
CHAPTER IX. The molten magma 238
Temperature 238
Influence of water 243
Magmatic solutions 244
Eutectics 247
Separation of minerals 250
Differentiation 253
Radioactivity 259
CHAPTER X. Rock-forming minerals 261
Preliminary statement 261
Diamond and graphite 262
Native metals 267
Sulphides 271
Fluorides 273
Corundum 274
The spinels 279
Hematite 284
Titanium minerals 286
Cassiterite and zircon 290
Phosphates 292
Quartz, tridymite, and opal 294
The feldspars 300
Leucite and analcite 304
The nephelite group 307
The cancrinite-sodalite group 309
The pyroxenes 311
The amphiboles 318
The olivine group 323
The micas 326
The chlorites 331
The melilite group 332
The garnets 334
Vesuvianite 337
The scapolites 337
Iolite 339
The zoisite group 340
Topaz 342
The andalusite group 343
Staurolite 344
Lawsonite 345
Dumortierite 345
Tourmaline 346
Beryl 347
Serpentine and talc 348
The zeolites 349
The carbonates 351
CHAPTER XI. Igneous rocks 352
Preliminary considerations 352
Classification 353
Composition of rocks 365
The rhyolite-granite group 366
The trachyte-syenite group 370

CHAPTER XI.—Igneous rocks—Continued. Page.
Composition of rocks—Continued.
Nephelite rocks 373
Leucite rocks 376
Analcite rocks 378
The monzonite group 380
The andesite-diorite series 381
The basalts 385
Diabase 387
The gabbros 388
Femic rocks 390
Basic rocks 393
Limiting conditions 394
Proximate calculations 397
CHAPTER XII. The decomposition of rocks 401
The general process 401
Solubility of minerals 403
Effects of vegetation 408
Influence of bacteria 409
Influence of animal life 410
Products of decomposition 411
Rate of decomposition 415
Kaolin 416
Laterite and bauxite 417
Absorption 424
Sand 426
Silt 428
Glacial clays 430
Loess 432
Marine sediments 435
Glauconite 439
Phosphate rock 442
Ferric hydroxides 451
Manganese ores 455
CHAPTER XIII. Sedimentary and detrital rocks 459
Sandstones 459
Flint and chert 464
Shale and slate 467
Limestone 470
Dolomite 480
Iron carbonate 490
Silicated iron ores 492
Gypsum 494
Native sulphur 495
Celestite 497
Barite 498
Fluorite 500
CHAPTER XIV. Metamorphic rocks 501
Metamorphic processes 501
Classification 505
Uralitization 507
Glaucophane schists 508

CHAPTER XIV. Metamorphic rocks—Continued. Page.
Sericitization 510
Other alterations of feldspar 512
Chloritization 517
Constitutional formulæ 518
Talc and serpentine 519
Quartzite 523
Metamorphosed shales 524
Ferruginous schists 526
Dehydration of clays 526
Mica schist 531
Gneiss 534
Metamorphic limestones 536
CHAPTER XV. Metallic ores 541
Definition 541
Source of metals 542
Gold 553
Silver 558
Copper 564
Mercury 572
Zinc and cadmium 577
Lead 584
Tin 591
Arsenic, antimony, and bismuth 595
Nickel and cobalt 598
Chromium 603
Molybdenum and tungsten 605
The platinum metals 607
Vanadium and uranium 611
Columbium, tantalum, and the rare earths 616
CHAPTER XVI. The natural hydrocarbons 619
Composition 619
Syntheses of petroleum 627
Origin of petroleum 631
CHAPTER XVII. Coal 642
Origin of coal 642
Peat 645
Lignite 648
Bituminous coal 653
Anthracite 655
The variations of coal 658
The gases in coal 660
Artificial coals 663
The constitution of coal 666
INDEX 669

THE DATA OF GEOCHEMISTRY.

By F. W. Clarke.

INTRODUCTION.

In the crust of the earth, with its liquid and gaseous envelopes, the ocean and the atmosphere, about eighty chemical elements are now recognized. These elements, the primary units of chemical analysis, are widely different as regards frequency; some are extremely rare, others are exceedingly abundant. A few occur in nature uncombined; but most of them are found only in combination. The compounds thus generated, the secondary units of geochemistry, are known as mineral species; and of these, excluding substances of organic origin, only about a thousand have yet been identified. By artificial means innumerable compounds can be formed; but in the chemistry of the earth's crust the range of possibility seems to be extremely limited. From time to time new elements and new mineral species are discovered; but it is more than probable that all of them which have any large importance in the economy of nature are already known. The rarest substances, however, whether elementary or compound, supply data for the solution of chemical problems; they can not, therefore, be ignored or set to one side as having no significance. In scientific investigation all evidence is of value.

By the aggregation of mineral species into large masses rocks are produced; and these are the fundamental units of geology. Some rocks, such as quartzite or limestone, consist of one mineral only, more or less impure; but most rocks are mixtures of species, in which, either by the microscope or by the naked eye, the individual components can be clearly distinguished. Being mixtures, rocks are widely variable in composition; and yet certain types are of common occurrence, while others are small in quantity and rare. The commonest rock-forming minerals are naturally the more stable compounds of the most abundant elements; and the rocks themselves represent the outcome of relatively simple rather than of complex reactions. Sim-

plicity of constitution seems to be the prevailing rule. An eruptive rock, for example, may be composed mainly of eight chemical elements, namely, oxygen, silicon, aluminum, iron, calcium, magnesium, sodium, and potassium. These elements are capable of combining so as to form some hundreds of mineral species; and yet only a few of the latter appear in the rock mass. The less stable species rarely occur; the more stable always predominate. The reactions which took place during the formation of the rock were strivings toward chemical equilibrium, and a maximum of stability under the existing conditions was the necessary result. The rarer rocks, like many of the rarer minerals, are the products of exceptional conditions; but the tendency toward stable equilibrium is always the same. Each rock may be regarded, for present purposes, as a chemical system, in which, by various agencies, chemical changes can be brought about. Every such change implies a disturbance of equilibrium, with the ultimate formation of a new system, which, under the new conditions, is itself stable in turn. The study of these changes is the province of geochemistry. To determine what changes are possible, how and when they occur, to observe the phenomena which attend them, and to note their final results are the functions of the geological chemist. Analysis and synthesis are his two chief instruments of research, but they become effective only when guided by a broad knowledge of chemical principles, which correlate the data obtained and extract from the evidence its full meaning. From a geological point of view the solid crust of the earth is the main object of study; and the reactions which take place in it may be conveniently classified under three heads—first, reactions between the essential constituents of the crust itself; second, reactions due to its aqueous envelope; and third, reactions produced by the agency of the atmosphere. That the three classes of reactions shade into one another, that they are not sharply defined, must be admitted; but the distinction between them is valid enough to serve a good purpose in the arrangement and discussion of the data. Under the first heading the reactions which occur in volcanic magmas and during their contact with rock masses are studied; under the second we find the changes due to percolating waters and the chemistry of natural waters in general; the essentially surficial action of the atmosphere forms the subject-matter of the third.

Furthermore, for convenience of study, the solid crust of the earth may be regarded as made up of three shells or layers, which interpenetrate one another to some extent, but which are, nevertheless, definite enough to consider separately. First and innermost there is a shell of crystalline or plutonic rocks, of unknown thickness, which forms the nearest approach to the original material of which the crust was composed. Next, overlying this layer, is a shell of sedimentary and fragmental rocks; and above this is the third layer

of soils, clays, gravels, and the like unconsolidated material. The second and third shells are relatively thin, and consist of material derived chiefly from the first, in great part through the transforming agency of waters and of the atmosphere, although organic life has had some share in bringing about certain of the changes. In addition to the substances which the two derived layers have received from the original plutonic mass they contain carbon and oxygen taken up from the atmosphere, and also a considerable proportion of water which has become fixed in the clays and shales. Along with this gain of material, there has been a loss of salts leached out into the ocean, but the factor of increase is the larger. When igneous rocks are transformed into sedimentary rocks, there is an average net gain of weight of 8 or 9 per cent, as roughly estimated from the composition of the various kinds of rock under consideration. To some extent, then, the ocean and the atmosphere are being slowly absorbed by and fixed in the solid crust of the earth; although under certain conditions this tendency is reversed, with liberation of water and of gases. A perfect balance of this sort, however, can not be assumed; and how far the main absorptive process may go, it is hardly worth while to conjecture. The data available for the solution of the problem are too uncertain.

Upon the subject of geochemistry a vast literature exists, but it is widely scattered and portions of it are difficult of access. The general treatises, like the classical works of Bischof and of Roth, are not recent and great masses of modern data are as yet uncorrelated. The American material alone is singularly rich, but most of it has been accumulated since Roth's treatise was published. The science of chemistry, moreover, has undergone great changes during the last twenty-five years, and many subjects now appear under new and generally unfamiliar aspects. To bring some of the data together, to formulate a few of the problems, and to present certain general conclusions in their modern form are the purposes of this memoir. It is not an exhaustive monograph upon geochemistry, but rather a critical summary of what is now known and a guide to the more important literature of the subject. If it does no more than to make existing data available to the reader, its preparation will be justified.

CHAPTER I.

THE CHEMICAL ELEMENTS.

NATURE OF THE ELEMENTS.

Although many thousands of compounds are known to chemists, and an almost infinite number are possible, they reduce on analysis to a small group of substances which are called elements. It is not necessary for us now to speculate upon the ultimate nature of these bodies; it is enough for the geologist to recognize the fact that all the compounds found in the earth are formed by their union with one another, and that they are not to any considerable extent reducible to simpler forms of matter by any means now within our control. To the geochemist they are the final results of analysis, beyond which we need not go. It is probable that the elements were originally developed by a process of evolution from one primal stuff, as shown by the progressive chemical complexity observed in passing from the simpler nebulæ through the hotter stars to the cold planets,[a] but such conceptions have no immediate bearing on geochemical problems. The transformation of radium into helium indicates an instability of the elements, but this appears to be so slight that its discussion here would be inappropriate and premature.[b] For present purposes the elements are our fundamental chemical units, and the questions of their origin and transmutability may be left out of consideration.

At present the elements enumerated in the subjoined table are known, all doubtful substances being omitted. The radioactive elements, polonium, actinium, radiothorium, etc., are also disregarded for the reasons that they are imperfectly known and geologically unimportant.

---

[a] See F. W. Clarke, Pop. Sci. Monthly, January, 1873. Also the later, well-known speculations of J. Norman Lockyer.

[b] There is evidence to show that the metals uranium and thorium also break down into lower forms of matter, but the change is very slight and very slow. The bearing of the phenomena upon geochemistry is not yet clear.

Elements, symbols, and atomic weights.

Element.	Symbol.	Atomic weight.	Element.	Symbol.	Atomic weight.
Aluminum	Al	27.1	Molybdenum	Mo	96.0
Antimony	Sb	120.2	Neodymium	Nd	143.6
Argon	A	39.9	Neon	Ne	20
Arsenic	As	75.0	Nickel	Ni	58.7
Barium	Ba	137.4	Nitrogen	N	14.01
Bismuth	Bi	208.0	Osmium	Os	191.0
Boron	B	11.0	Oxygen	O	16.00
Bromine	Br	79.96	Palladium	Pd	106.5
Cadmium	Cd	112.4	Phosphorus	P	31.0
Cæsium	Cs	132.9	Platinum	Pt	194.8
Calcium	Ca	40.1	Potassium	K	39.15
Carbon	C	12.00	Praseodymium	Pr	140.5
Cerium	Ce	140.25	Radium	Ra	225
Chlorine	Cl	35.45	Rhodium	Rh	103.0
Chromium	Cr	52.1	Rubidium	Rb	85.5
Cobalt	Co	59.0	Ruthenium	Ru	101.7
Columbium	Cb	94	Samarium	Sa	150.3
Copper	Cu	63.6	Scandium	Sc	44.1
Dysprosium	Dy	162.5	Selenium	Se	79.2
Erbium	Er	166	Silicon	Si	28.4
Europium	Eu	152	Silver	Ag	107.93
Fluorine	F	19.0	Sodium	Na	23.05
Gadolinium	Gd	156	Strontium	Sr	87.6
Gallium	Ga	70.0	Sulphur	S	32.06
Germanium	Ge	72.5	Tantalum	Ta	181
Glucinum	Gl	9.1	Tellurium	Te	127.6
Gold	Au	197.2	Terbium	Tb	159.2
Helium	He	4.0	Thallium	Tl	204.1
Holmium	Ho	(?)	Thorium	Th	232.5
Hydrogen	H	1.008	Thulium	Tm	171
Indium	In	115	Tin	Sn	119.0
Iodine	I	126.97	Titanium	Ti	48.1
Iridium	Ir	193.0	Tungsten	W	184.0
Iron	Fe	55.9	Uranium	U	238.5
Krypton	Kr	81.8	Vanadium	V	51.2
Lanthanum	La	138.9	Xenon	Xe	128
Lead	Pb	206.9	Ytterbium	Yb	173.0
Lithium	Li	7.03	Yttrium	Y	89.0
Magnesium	Mg	24.36	Zinc	Zn	65.4
Manganese	Mn	55.0	Zirconium	Zr	90.6
Mercury	Hg	200.0			

DISTRIBUTION OF THE ELEMENTS.[a]

The elements differ widely in their abundance and in their mode of distribution in nature. Under the latter heading the more important data may be summarized as follows:

Aluminum.—The most abundant of all the metals. An essential constituent of all important rocks except the sandstones and limestones, and even in these its compounds are common impurities. Being easily oxidized, it nowhere occurs native. Found chiefly in silicates, such as the feldspars, micas, clays, etc.; but also as the oxide, corundum; the hydroxide, bauxite; as fluoride in cryolite; and in various phosphates and sulphates. With the exception of the fluorides, only oxidized compounds of aluminum are known to exist in nature.

Antimony.—Common, but neither abundant nor widely diffused. Found native, more frequently as the sulphide, stibnite, also in various antimonides and sulphantimonides of the heavy metals, and as oxide of secondary origin. The minerals of antimony are generally

[a] For an early table showing distribution, see Élie de Beaumont, Bull. Soc. géol., 2d ser., vol. 4, p. 1333, 1846–47.

found in metalliferous veins, but the amorphous sulphide has been observed as a deposit upon sinter at Steamboat Springs, Nevada.

Argon.—An inert gas that forms nearly 1 per cent of the atmosphere, and is also sometimes found in mineral springs. No compounds of argon are known.

Arsenic.—Found native, in two sulphides, in various arsenides and sulpharsenides of the heavy metals, as oxide, and in considerable number of arsenates. Arsenopyrite is the commonest arsenical mineral. Arsenic is very widely diffused and traces of it exist normally even in organic matter. It is not an uncommon ingredient in mineral, especially thermal, springs. In its chemical relations it is regarded as nonmetallic and closely allied to phosphorus.

Barium.—Widely distributed in small quantities throughout the igneous rocks, probably as a minor constituent of the feldspars and micas, although other silicates containing barium are known. Commonly found concentrated as the sulphate, barite, or as the carbonate, witherite. This element occurs only in oxidized compounds.

Bismuth.—Resembles antimony in its modes of occurrence, but is less common. Native bismuth and the sulphide, bismuthinite, are its chief ores. Two silicates of bismuth, several sulphobismuthides, and the telluride, oxide, carbonate, vanadate, and arsenate exist as relatively rare mineral species.

Boron.—An essential constituent of several silicates, notably of tourmaline and datolite. Its compounds are obtained commercially from borates, such as borax, ulexite, and colemanite, or from native orthoboric acid, sassolite, which is found in the waters of certain volcanic springs. Some alkaline lakes or lagoons, especially in California and Tibet, yield borax in large quantities.

Bromine.—Found in natural waters in the form of bromides. Sea water contains it in appreciable quantities, and much bromine has been extracted from the brine wells of West Virginia and Michigan. The bromide and chlorobromide of silver are well-known ores.

Cadmium.—A relatively rare metal found in association with zinc, which it resembles. Occurs generally as the sulphide, greenockite.

Cæsium.—A rare metal of the alkaline group, allied to potassium. Often found in lepidolite, and in the waters of some mineral springs. The very rare mineral pollucite is a silicate of aluminum and cæsium.

Calcium.—One of the most abundant metals, but never found in nature uncombined. An essential constituent of many rock-forming minerals, especially of anorthite, garnet, epidote, the amphiboles, the pyroxenes, and scapolite. Limestone is the carbonate, fluor spar is the fluoride, and gypsum is the sulphate of calcium. Apatite is the fluophosphate or chlorophosphate of this metal. Many other mineral species also contain calcium, and it is found in nearly all

natural waters and in connection with organized life, as in bones and shells. Calcium sulphide has once been identified in a meteorite.

Carbon.—The characteristic element of organic matter. In the mineral kingdom carbon is found crystallized as graphite and diamond and also amorphous in coal. Carbon dioxide is a normal constituent of atmospheric air. Natural gas, petroleum, and bitumen are essentially hydrocarbons. Carbonic acid and carbonates exist in most natural waters, and great rock masses are composed of carbonates of calcium, magnesium, and iron. A few silicates contain carbon, but of these, cancrinite is the only species having petrographic importance.

Cerium.—One of the group of elements known as the metals of the rare earths. These substances are generally found in granites or elæolite syenites, or in gravels derived therefrom. Cerium exists in a considerable number of mineral species, but the phosphate, monazite, and the silicates, cerite and allanite, are all that need be mentioned here.

Chlorine.—The most abundant element of the halogen group. Commonly found as sodium chloride, as in sea water and rock salt. Also in certain rock-forming minerals, such as sodalite and the scapolites, and in a variety of other minerals of greater or less importance. Silver chloride, for example, is a well-known ore, and carnallite is valuable for the potassium which it contains.

Chromium.—Very widely diffused, generally in the form of chromite, and most commonly in magnesian rocks. A few chromates and several silicates containing chromium are also known, but as relatively rare minerals.

Cobalt.—Less abundant than nickel, with which it is generally associated. Usually found as sulphide or arsenide, or in oxidized salts derived from those compounds.

Columbium.—A rare acid-forming element resembling and associated with tantalum. Both form salts with iron, manganese, calcium, uranium, and the rare-earth metals, the minerals columbite, tantalite, and samarskite being typical examples. All these minerals are most abundant in pegmatite veins.

Copper.—Minute traces of this metal are often detected in igneous rocks, although they are rarely determined quantitatively. Also present in sea water in very small amounts. Its chief ores are native copper, several sulphides, two oxides, and two carbonates. The arsenides, arsenates, antimonides, phosphates, sulphates, and silicates also exist in nature, but are less important. In chalcopyrite and bornite, copper is associated with iron.

Dysprosium.—A little-known metal of the rare earths.

Erbium.—One of the rare-earth metals of the yttrium group. See "Yttrium."

Europium.—Another metal of the rare earths, of slight importance.

Fluorine.—The most characteristic minerals of fluorine are calcium fluoride (fluor spar) and cryolite, a fluoride of aluminum and sodium. Apatite is a phosphate containing fluorine, and the element is also found in a goodly number of silicates, such as topaz, tourmaline, the micas, etc. Fluorine, therefore, is commonly present in igneous rocks, although in small quantities.

Gadolinium.—One of the metals of the rare earths. See "Cerium" and "Yttrium."

Gallium.—A very rare metal whose salts resemble those of aluminum. Found in traces in many zinc blendes. Always present in spectroscopic traces in bauxite and in nearly all aluminous minerals.

Germanium.—A very rare metal allied to tin. The mineral argyrodite is a sulphide of germanium and silver.

Glucinum.—A relatively rare metal, first discovered in beryl, from which the alternative name beryllium is derived. Found also in the aluminate, chrysoberyl; in several rare silicates and phosphates; and in a borate, hambergite. As a rule the minerals of glucinum occur in granitic rocks.

Gold.—Found in nature as the free metal and in tellurides. Very widely distributed and under a great variety of conditions, but almost invariably associated with quartz or pyrite. Gold has been observed in process of deposition, probably from solution in alkaline sulphides, at Steamboat Springs, Nevada. It is also present, in very small traces, in sea water.

Helium.—An inert gas obtained from uraninite. The largest quantities are derived from the highly crystalline uraninite found in pegmatite. The massive mineral from metalliferous veins contains little or no helium. Traces of helium also exist in the atmosphere, in spring waters, and in some samples of natural gas.

Holmium.—One of the rare-earth metals. Little known.

Hydrogen.—This element forms about one-ninth part by weight of water, and therefore it occurs almost everywhere in nature. In a majority of all mineral species, and therefore in practically all rocks, it is found, either as occluded moisture, as water of crystallization, or combined as hydroxyl. All organic matter contains hydrogen, and hence it is an essential constituent of such derived substances as natural gas, petroleum, asphaltum, and coal. The free gas has been detected in the atmosphere, but in very minute quantities.

Indium.—A rare metal, found in very small quantities in certain zinc blendes. Spectroscopic traces of it can be detected in many minerals, especially in iron ores.

Iodine.—The least abundant element of the halogen group. Found in sea water, in certain mineral springs, and in a few rare minerals, especially the iodides of silver, copper, and lead. Calcium iodate, lautarite, exists in the Chilean nitrate beds.

Iridium.—A metal of the platinum group. See "Platinum."

Iron.—Next to aluminum, the most abundant metal, although native iron is rare. Found in greater or less amount in practically all rocks, especially in those which contain amphiboles, pyroxenes, micas, or olivine. Magnetite and hematite are oxides of iron, limonite is a hydroxide, pyrite and marcasite are sulphides, siderite is the carbonate, and there are also many silicates, phosphates, arsenates, etc., which contain this element. The mineral species of which iron is a normal constituent are numbered by hundreds.

Krypton.—An inert gas of the argon group, found in small quantities in the atmosphere.

Lanthanum.—A metal of the rare-earth group, almost invariably associated with cerium, *q. v.*

Lead.—Found chiefly in the sulphide, galena, from which, by alteration, various oxides, the sulphate, and the carbonate are derived. Native lead is rare. A number of sulphosalts are known, several silicates, and also a phosphate, an arsenate, and a vanadate. Galena is frequently associated with pyrite, marcasite, and sphalerite.

Lithium.—One of the alkaline metals. Traces of it are found in nearly all igneous rocks, and in the waters of many mineral springs. The more important lithia minerals are lepidolite, spodumene, petalite, amblygonite, triphylite, and the lithia tourmalines.

Magnesium.—One of the most abundant metals. In igneous rocks it is represented by amphiboles, pyroxenes, micas, and olivine. Talc, chlorite, and serpentine are common magnesium silicates, and dolomite, the carbonate of magnesia and lime, is also found in enormous quantities. Magnesium compounds occur in sea water and in many mineral springs. The metal is not found native.

Manganese.—Widely diffused in small quantities. Found in most rocks and in some mineral waters. Never native. Occurs commonly in silicates, oxides, and carbonates, less frequently in sulphides, phosphates, tungstates, columbates, etc. The dioxide, pyrolusite, and the hydroxide, psilomelane, are the commonest manganese minerals.

Mercury.—This metal is neither abundant nor widely diffused. Exists as native mercury, but is usually found, locally concentrated, in the form of the sulphide, cinnabar. Chlorides of mercury, the selenide and the telluride, are relatively rare minerals. Cinnabar has been observed in process of deposition by solfataric action at Sulphur Bank, California; and Steamboat Springs, Nevada.

Molybdenum.—One of the rarer metals. Most frequently found in granite in the form of the sulphide, molybdenite. The molybdates of iron, calcium, and lead are also known as mineral species.

Neodymium.—One of the rare-earth metals associated with cerium.

Neon.—An inert gas of the argon group, found in minute traces in the atmosphere.

Nickel.—Closely allied to cobalt. Found native, alloyed with iron, in meteorites and in the terrestrial minerals awaruite and josephinite. Very frequently detected in igneous rocks, probably as a constituent of olivine. Occurs primarily in silicates, sulphides, arsenides, antimonides, and as telluride, and secondarily in several other minerals. The presence of nickel is especially characteristic of magnesian igneous rocks, and it is generally associated in them with chromium.

Nitrogen.—The predominant element of the atmosphere, in which it is uncombined. Also abundant in organic matter, and in such derived substances as coal. Nitrates are found in the soil and in cave earth; and in some arid regions, as in Chile, they exist in enormous quantities. Some volcanic waters contain nitrogen in the form of ammonium compounds.

Osmium.—A metal of the platinum group. See "Platinum."

Oxygen.—The most abundant of the elements, forming about one-half of all known terrestrial matter. In the free state it constitutes about one-fifth of the atmosphere; and in water it is the chief element of the ocean. All important rocks contain oxygen in proportions ranging from 45 to 53 per cent.

Palladium.—A metal of the platinum group.

Phosphorus.—Found in nearly all igneous rocks, generally as a constituent of apatite. With one or two minor exceptions, it exists in the mineral kingdom only in the form of phosphates, of which a large number are known. An iron phosphide occurs in meteorites. Phosphorus is also an essential ingredient of living matter, especially of bones, and certain large deposits of calcium phosphate are of organic origin.

Platinum.—Platinum, iridium, osmium, ruthenium, rhodium, and palladium constitute a group of metals of which the first named is the most important. As a rule they are found associated together, and generally uncombined. To the latter statement there are two known exceptions—sperrylite is platinum arsenide, and laurite is ruthenium sulphide. Native platinum, platiniridium, iridosmine, and native palladium are all reckoned as definite mineral species. The metals of this group are commonly found associated with magnesian rocks, or in gravels derived from them. Chromite often accompanies

platinum, and so also do the ores of nickel. Sperrylite is found in the nickeliferous deposits at Sudbury, Canada; and has also been identified in the sulphide ores of the Rambler mine in Wyoming. In the latter ores palladium is present also, and possibly, like the platinum, as arsenide.

Potassium.—An abundant metal of the alkaline group. Found in many rocks, especially as a constituent of the feldspars, micas, and leucite. Nearly all terrestrial waters contain potassium, and the saline beds at Stassfurt, Germany, are peculiarly rich in it.

Praseodymium.—A rare-earth metal associated with cerium.

Radium.—A very rare metal of the calcium-barium group. Obtained in minute quantities from uraninite. Of possible importance in the study of volcanism. According to R. J. Strutt,[a] traces of radium can be detected in all igneous rocks.

Rhodium.—A metal of the platinum group. See "Platinum."

Rubidium.—An alkaline metal intermediate between potassium and cæsium. Found in lepidolite and in some mineral springs. Rubidium is reported as present in the waters of the Caspian Sea.

Ruthenium.—A metal of the platinum group. See "Platinum."

Samarium.—A rare-earth metal obtained from samarskite.

Scandium.—A rare-earth metal obtained from euxenite.

Selenium.—A nonmetallic element allied to sulphur, with which it is commonly associated. Found native, and also in the selenides of copper, silver, mercury, lead, bismuth, and thallium. A few selenites exist as secondary minerals.

Silicon.—Next to oxygen, the most abundant element. Found in quartz, tridymite, opal, and all silicates. The characteristic element of all important rocks except the carbonates. Silica also exists in probably all river, well, and spring waters. From volcanic waters it is deposited in the form of sinter.

Silver.—This metal occurs native, as sulphide, arsenide, antimonide, telluride, chloride, bromide, iodide, and in numerous sulphosalts. Native gold generally contains some silver, and the latter is also often associated with native copper. Oxidized compounds of silver are known only as artificial products. Small traces of silver exist in sea water.

Sodium.—The most abundant of the alkaline metals. In igneous rocks it is a constituent of the feldspars, of the nepheline group of minerals, and of certain pyroxenes, such as ægirite. Also abundant in rock salt, and in nearly all natural waters, sea water especially.

Strontium.—A metal intermediate between calcium and barium, but less abundant than the latter. Strontium in small amount is a com-

[a] Proc. Roy. Soc., vol. 77, ser. A, p. 472, 1906.

mon ingredient of igneous rocks. The most important strontium minerals are the sulphate, celestite, and the carbonate, strontianite.

Sulphur.—Found native and in many sulphides and sulphates. Also in igneous rocks in the sulphatosilicates, haüynite and nosean. Native sulphur is abundant in volcanic regions, and is also formed elsewhere by the reduction of sulphates. Pyrite is the commonest of the sulphides, gypsum of the sulphates. Alkaline sulphates are obtainable from many natural waters. Sulphur also exists in coal and petroleum.

Tantalum.—A rare acid-forming element akin to columbium, with which it is usually associated.

Tellurium.—A semimetallic element, the least abundant of the sulphur group. Found native, and in the tellurides of gold, silver, lead, bismuth, mercury, nickel, and copper. Its oxide and a few rare tellurates or tellurites are known as alteration products.

Terbium.—A rare-earth metal of the yttrium group. See "Yttrium."

Thallium.—One of the rarer heavy metals. Found as an impurity in pyrite and some other sulphides. The rare mineral crookesite is a selenide of copper and thallium, and lorandite is sulpharsenide of thallium.

Thorium.—A rare metal of the titanium-zirconium group, the most basic of the series. Chiefly obtained from monazite sand. Also known in silicates, such as thorite, in some columbo-tantalates, and in certain varieties of uraninite.

Thulium.—A rare-earth metal of which little is known.

Tin.—Very rare native. Most abundant as the oxide, cassiterite, which is found in association with granitic rocks. Traces of tin have been detected in feldspar. Stannite, or tin pyrites, is a sulphide of tin, copper, and iron, and a few other rare minerals contain this element.

Titanium.—This element is almost invariably present in igneous rocks and in the sedimentary material derived from them. Out of 800 igneous rocks analyzed in the laboratory of the United States Geological Survey, 784 contained titanium.[a] Its commonest occurrences are as titanite, ilmenite, rutile, and perofskite. The element is often concentrated in beds of titanic iron ore.

Tungsten.—An acid-forming heavy metal allied to molybdenum. Found as tungstates of iron, manganese, calcium, and lead in the minerals wolfram, hübnerite, scheelite, and stolzite.

Uranium.—A heavy metal found chiefly in uraninite, carnotite, samarskite, and a few other rare minerals. The phosphates, autunite and torbernite, are not uncommon in granites, and uraninite, although

[a] F. P. Dunnington (Am. Jour. Sci., 3d ser., vol. 42, p. 491, 1891) has shown the abundance of titanium in soils and clays. He gives about eighty determinations.

sometimes obtained from metalliferous veins, is more generally of granitic association. Carnotite occurs with sedimentary sandstones.

Vanadium.—A rare element, both acid and base forming, and allied to phosphorus. Found in vanadates, such as vanadinite, descloizite, and pucherite, associated with lead, copper, zinc, and bismuth. Also in the silicates roscoelite and ardennite. Carnotite, which was mentioned in the preceding paragraph, is an impure vanadate of potassium and uranium.

Xenon.—An inert gas, the heaviest member of the argon group. Found in minute traces in the atmosphere.

Yttrium and ytterbium.—Two rare-earth metals, which, with erbium and terbium, are best obtained from gadolinite. Yttrium is also found in the phosphate, xenotime, in several silicates, and in some of the columbo-tantalate group of minerals. The minerals of the rare earths are generally found in granite or pegmatite veins.

Zinc.—Common, but not widely diffused. Native zinc has been reported, but its existence is doubtful. The sulphide, sphalerite, is its commonest ore, but the carbonate, smithsonite, and a silicate, calamine, are also abundant. At Franklin, New Jersey, zinc is found in a unique deposit, in which the oxide, zincite; the ferrite, franklinite; and the silicates, troostite and willemite, are the characteristic ores.

Zirconium.—Allied to titanium and rather widely diffused in the igneous rocks. It usually occurs in the silicate, zircon.

RELATIVE ABUNDANCE OF THE ELEMENTS.

In any attempt to compute the relative abundance of the chemical elements, we must bear in mind the limitations of our experience. Our knowledge of terrestrial matter extends but a short distance below the surface of the earth, and beyond that we can only indulge in speculation. The atmosphere, the ocean, and a thin shell of solids are, speaking broadly, all that we can examine. For the first two layers our information is reasonably good, and their masses are approximately determined; but for the last one we must assume some arbitrary limit. The real thickness of the lithosphere need not be considered; but it seems probable that to a depth of 10 miles below sea level the rocky material can not vary greatly from the volcanic outflows which we recognize at the surface. This thickness of 10 miles, then, represents known matter, and gives us a quantitative basis for study. A shell only 6 miles thick would barely clear the lowest deeps of the ocean.

I am indebted to Dr. R. S. Woodward for data relative to the volume of matter which is thus taken into account. The volume of the 10-mile rocky crust, including the mean elevation of the con-

tinents above the sea, is 1,633,000,000 cubic miles, and to this material we may assign a mean density not lower than 2.5 nor much higher than 2.7. The volume of the ocean is put at 302,000,000[a] cubic miles, and I have given it a density of 1.03, which is a trifle too high. The mass of the atmosphere, so far as it can be determined, is equivalent to that of 1,268,000 cubic miles of water, the unit of density. Combining these data, we get the following expression for the composition of the known matter of our globe:

Composition of known matter of the earth.

Density of crust		2.5	2.7
Atmosphere	per cent	0.03	0.03
Ocean	do	7.08	6.58
Solid crust	do	92.89	93.39
		100.00	100.00

In short, we can regard the surface layer of the earth, to a depth of 10 miles, as consisting very nearly of 93 per cent solid and 7 per cent liquid matter, treating the atmosphere as a small correction to be applied when needed.[b] The figure thus assigned to the ocean is probably a little too high, but its adoption makes an allowance for the fresh waters of the globe, which are too small in amount to be estimable directly. Their insignificance may be inferred from the fact that a section of the 10-mile crust having the surface area of the United States represents only about 1.5 per cent of the entire mass of matter under consideration. A quantity of water equivalent to 1 per cent of the ocean, or 0.07 per cent of the matter now under consideration, would cover all the land areas of the globe to a depth of 290 feet. Even the mass of Lake Superior thus becomes a negligible quantity.[c]

The composition of the ocean is easily determined from the data given by Dittmar in the report of the *Challenger* expedition.[d] The maximum salinity observed by him amounted to 37.37 grams of salts in a kilogram of water, and by taking this figure instead of a lower

[a] Sir John Murray (Scottish Geog. Mag., 1888, p. 39) estimates the volume of the ocean at 323,722,150 cubic miles. K. Karstens, more recently (Eine neue Berechnung der mittleren Tiefen der Oceane, Inaug. Diss., Kiel, 1894), put it at 1,285,935,211 cubic kilometers, or 307,496,000 cubic miles. Karstens gives a good summary of previous estimates, which vary widely. To change the figure given above would be a straining after unattainable precision..

[b] The adoption of Murray's figure for the volume of the ocean would make its percentage 7.12 to 7.88, according to the density (2.5 or 2.7) assigned to the lithosphere.

[c] The amount of the so-called "ground water," which is contained in the porous rocks, is difficult to estimate. C. R. Van Hise (Treatise on metamorphism: Mon. U. S. Geol. Survey, vol. 47, p. 129, 1904) calculates that the water in the rocks to a depth of 10,000 meters is equal to a sheet covering all the continental areas 69 meters, or 226 feet, deep. See also a questionable computation by W. B. Greenlee, in Am. Geologist, vol. 18, p. 33, 1896.

[d] In vol. 1, Physics and chemistry.

average value we can allow for saline masses inclosed within the solid crust of the earth, and which would not otherwise appear in the final estimates. Combining this datum with Dittmar's figures for the average composition of the oceanic salts, we get the second of the subjoined columns. Other elements contained in sea water, but only in minute traces, need not be considered here. No one of them could reach 0.001 per cent.

Composition of oceanic salts.		*Composition of ocean.*	
$NaCl$	77.76	O	85.79
$MgCl_2$	10.88	H	10.67
$MgSO_4$	4.74	Cl	2.07
$CaSO_4$	3.60	Na	1.14
K_2SO_4	2.46	Mg	.14
$MgBr_2$	.22	Ca	.05
$CaCO_3$	.34	K	.04
	100.00	S	.09
		Br	.008
		C	.002
			100.00

It is worth while at this point to consider how large a mass of matter these oceanic salts represent. The average salinity of the ocean is not far from 3.5 per cent; its mean density is 1.027, and its volume is 302,000,000 cubic miles. The specific gravity of the salts, as nearly as can be computed, is 2.25. From these data it can be shown that the volume of the saline matter in the ocean is a little more than 4,800,000 cubic miles, or enough to cover the entire surface of the United States, excluding Alaska, 1.6 miles deep.[a] In the face of these figures, the beds of rock salt at Stassfurt and elsewhere, which seem so enormous at close range, become absolutely trivial. The allowance made for them by using the maximum salinity of the ocean instead of the average is more than sufficient, for it gives them a total volume of 325,000 cubic miles. That is, the data used for computing the average composition of the ocean and its average significance as a part of all terrestrial matter are maxima, and therefore tend to compensate for the omission of factors which could not well be estimated directly.

The average composition of the lithosphere is very nearly that of the igneous rocks alone. The sedimentary rocks represent altered igneous material, from which salts have been leached into the ocean, and to which oxygen, water, and carbon dioxide have been added from the atmosphere. For these changes corrections can be applied, and their magnitude and effect, as will be shown later, is surprisingly small. The thin film of organic matter upon the surface of the earth

[a] According to J. Joly (Sci. Trans. Roy. Soc. Dublin, 2d ser., vol. 7, p. 30, 1899), the sodium chloride in the ocean would cover the entire globe 112 feet deep.

can be neglected altogether. In comparison with the 10-mile thickness of rock below it, its quantity is too small to be considered. Even beds of coal are negligible, for their volume also is relatively insignificant. Practically, we have to consider at first only 10 miles of igneous rock, which, when large enough areas are studied, averages much alike in composition all over the globe. This point was established in an earlier memoir, when groups of analyses, representing rocks from different regions, were compared.[a] The essential uniformity of the averages was unmistakable, and it has been still further emphasized in later computations by others as well as by myself. The following averages are now available for comparison:

A. My original average of 880 analyses, of which 207 were made in the laboratory of the United States Geological Survey and 673 were collected from other sources. Many of these analyses were incomplete.

B. The average of 680 analyses from the records of the Survey laboratories, plus some hundreds of determinations of silica, lime, and alkalies. The Survey data up to January 1, 1897.

C. The average of 830 analyses from the Survey records, plus some partial determinations. The Survey data up to January 1, 1900.

D. An average of all the analyses, partial or complete, made up to January 1, 1904, in the laboratories of the Survey.[b]

E. An average, computed by A. Harker,[c] of 397 analyses of igneous rocks from British localities. Many of these analyses were incomplete, especially with respect to phosphorus and titanium.

F. An average of 1,811 analyses, from Washington's tables.[d] Calculated by H. S. Washington. The data represent material from all parts of the world.

Now, omitting minor constituents, which rarely appear except in the more modern analyses, these averages may be tabulated together, although they are not absolutely comparable. The comparison assumes the following form:

Average composition of igneous rocks.

	Clarke.				Harker.	Washington.
	A.	B.	C.	D.	E.	F.
SiO_2	58.59	59.77	59.71	60.91	58.75	58.239
Al_2O_3	15.04	15.38	15.41	15.28	15.64	15.796
Fe_2O_3	3.94	2.65	2.63	2.63	5.34	3.334
FeO	3.48	3.44	3.52	3.46	2.40	3.874
MgO	4.49	4.40	4.36	4.13	4.09	3.843
CaO	5.29	4.81	4.90	4.88	4.98	5.221
Na_2O	3.20	3.61	3.55	3.45	3.25	3.912
K_2O	2.90	2.83	2.80	2.98	2.74	3.161
H_2O at 100°	1.96	.....	.....	.41	2.23	.363
H_2O above 100°		1.51	1.52	1.49		1.428
TiO_2	.55	.53	.60	.73	.12	1.039
P_2O_5	.22	.21	.22	.26	.02	.373
	99.66	99.14	99.22	100.61	99.56	100.583

[a] Bull. Phil. Soc. Washington, vol. 11, p. 131, 1889. Also in Bull. U. S. Geol. Survey No. 78, p. 34, 1891.

[b] See Bull. U. S. Geol. Survey No. 228, p. 17, 1904, for details.

[c] Geol. Mag., 1899, p. 220.

[d] Prof. Paper U. S. Geol. Survey No. 14, p. 106, 1903. In this average and in Harker's there are data for manganese, which I now leave temporarily out of account.

Although these six columns are not very divergent, there are differences between them which may be more apparent than real. Differences of summation are partly due to the omission of minor constituents; but the largest variations are attributable to the water. In two columns hygroscopic water is omitted; in two it is not distinguished from combined water; in two a discrimination is made. By rejecting the figures for water and recalculating to 100 per cent, the averages become more nearly alike, as follows:

Recalculated average composition of igneous rocks.

	A.	B.	C.	D.	E.	F.
SiO_2	59.97	61.22	61.12	61.71	60.36	58.96
Al_2O_3	15.39	15.75	15.77	15.48	16.07	15.99
Fe_2O_3	4.03	2.71	2.69	2.68	5.48	3.37
FeO	3.56	3.53	3.60	3.50	2.46	3.93
MgO	4.60	4.51	4.46	4.18	4.20	3.89
CaO	5.41	4.93	5.02	4.94	5.12	5.28
Na_2O	3.28	3.69	3.63	3.49	3.34	3.96
K_2O	2.97	2.90	2.87	3.02	2.83	3.20
TiO_2	.56	.54	.61	.74	.12	1.05
P_2O_5	.23	.22	.23	.26	.02	.37
	100.00	100.00	100.00	100.00	100.00	100.00

Of these averages, only D and F need be considered any further, for they include the largest masses of trustworthy data. A was only a preliminary computation, B and C are included under D; Harker's average contains too many imperfect analyses. D and F, however, are not strictly equivalent. Washington's average relates only to analyses which were nominally complete and made in many laboratories by very diverse methods. My average represents the homogeneous work of one laboratory, and includes, moreover, many partial determinations. For the simpler salic rocks determinations of silica, lime, and alkalies are generally all that is needed for petrographic purposes. The femic rocks are mineralogically more complex, and for them full analyses are necessary. The partial analyses, therefore, represent chiefly salic rocks, and their inclusion in the average tends to raise the percentage of silica and to lower the proportions of other elements. The salic rocks, however, are more abundant than those of the other class, and so the higher figure for silica seems more probable. This conclusion is in line with a criticism by E. P. Mennell,[a] who thinks that the femic rocks received excessive weight in my earlier averages. Mennell has studied the rocks of southern Africa, where granitic types are predominant, and he believes that the true average should approximate the composition of a granite. A wider

[a] Geol. Mag., 5th ser., vol. 1, p. 263, 1904. For other discussions of the data given in my former papers, see L. De Launay, Revue gén. sci., April 30, 1904; and C. Ochsenius, Zeitschr. prakt. Geol., May, 1898. Compare also R. A. Daly, Bull. U. S. Geol. Survey No. 209, p. 110, 1903, who argues that the universal or fundamental magma is approximately basaltic.

range of observation would probably modify that opinion, which, however, is entitled to some weight.

So far, my final average has only been partly given; the minor constituents of the rocks remain to be taken into account. In the laboratory of the Geological Survey the analyses of igneous rocks have been unusually elaborate, and many things have been determined that are too often ignored. The complete average is given in the next table, with the number of determinations to which each figure corresponds. In the elementary column hygroscopic water does not appear, but an allowance is made for a small amount of iron which was reported in the analyses as FeS_2. When a "trace" of anything is recorded, it is arbitrarily reckoned as 0.01 per cent, and when a substance is known to be absent from a rock, by actual determination of the fact, it is assigned zero value in making up the averages.

Complete avereage of analyses of igneous rocks made in the laboratories of the United States Geological Survey.

	Number of determinations.	Average.	Reduced to 100 per cent.	In elementary form.	
SiO_2	1,358	60.91	59.87	O	47.09
Al_2O_3	912	15.28	15.02	Si	28.23
Fe_2O_3	961	2.63	2.58	Al	7.99
FeO	962	3.46	3.40	Fe	4.46
MgO	1,027	4.13	4.06	Mg	2.46
CaO	1,215	4.88	4.79	Ca	3.43
Na_2O	1,268	3.45	3.39	Na	2.53
K_2O	1,265	2.98	2.93	K	2.44
H_2O-	770	.41	.40	H	.17
H_2O+	832	1.49	1.46	Ti	.43
TiO_2	870	.73	.72	Zr	.026
ZrO_2	185	.03	.03	C	.14
CO_2	469	.53	.52	P	.11
P_2O_5	884	.26	.26	S	.11
S	575	.11	.11	Cl	.07
Cl	234	.07	.07	F	.02
F	73	.02	.02	Ba	.089
BaO	617	.11	.11	Sr	.034
SrO	520	.04	.04	Mn	.084
MnO	899	.10	.10	Ni	.023
NiO	243	.03	.03	Cr	.034
Cr_2O_3	246	.05	.05	V	.02
V_2O_3	40	.03	.03	Li	.01
Li_2O	550	.01	.01		
		101.74	100.00		100.000

In this computation the figures for C, Zr, Cl, F, Ni, Cr, and V are only very rough approximations. They show, however, that these elements exist in igneous rocks in determinable quantities. The elements not included in the calculation represent minor corrections, to be applied whenever the necessity for doing so may arise. For estimates of their probable amounts, the papers by J. H. L. Vogt [a] and J. F. Kemp [b] can be consulted. It is probable that no one of

[a] Zeitschr. prakt. Geol., 1898, pp. 225, 314, 377, 413; 1899, pp. 10, 274.

[b] Science, January 5, 1906; Econ. Geol., vol. 1, p. 207, 1905. See also a curious paper by W. Ackroyd, in Chem. News, vol. 86, p. 187, 1902. W. N. Hartley and H. Ramage (Jour. Chem. Soc., vol. 71, p. 533, 1897), have shown that some of the rarest elements, such as *gallium and indium*, are widely diffused in rocks and minerals.

them, except possibly copper, would reach 0.01 per cent. The elements not mentioned in the table can not amount to more than 0.5 per cent altogether, and even that small figure is likely to be an overestimate.

Before we can finally determine the composition of the lithosphere, the sedimentary rocks are to be taken into account; and to do this we must ascertain their relative quantity. First, however, we may consider their composition, which has been determined by means of composite analyses. That is, instead of averaging analyses, average mixtures of many rocks were prepared,[a] and these were analyzed once for all. The results appear in the next table.

Composite analyses of sedimentary rocks.

A. Composite analysis of 78 shales; or, more strictly, the average of two smaller composites, properly weighted.
B. Composite analysis of 253 sandstones.
C. Composite analysis of 345 limestones.

	A.	B.	C.
SiO_2	58.38	78.66	5.19
Al_2O_3	15.47	4.78	.81
Fe_2O_3	4.03	1.08	.54
FeO	2.46	.30	
MgO	2.45	1.17	7.90
CaO	3.12	5.52	42.61
Na_2O	1.31	.45	.05
K_2O	3.25	1.32	.33
H_2O at 110°	1.34	.31	.21
H_2O above 110°	3.68	[a] 1.33	[a] .56
TiO_2	.65	.25	.06
CO_2	2.64	5.04	41.58
P_2O_5	.17	.08	.04
S	.....	.....	.09
SO_3	.65	.07	.05
Cl	.....	trace	.02
BaO	.05	.05	none
SrO	none	none	none
MnO	trace	trace	.05
Li_2O	trace	trace	trace
C, organic	.81	.....	.....
	100.46	100.41	100.09

[a] Includes organic matter.

In attempting to compare these analyses with the average composition of the igneous rocks, we must remember that they do not represent definite substances, but mixtures shading into one another. The average limestone contains some clay and sand; the average shale contains some calcium carbonate. Furthermore, they do not cover all the products derived from the decomposition of the primitive rock, for the great masses of sediments on the bottom of the ocean are left out of account. The analyses of the latter are too few to give conclusive averages, but the data published in the *Challenger* reports[b]

[a] These mixtures were prepared by G. W. Stose, under the direction of G. K. Gilbert. The analyses were made by H. N. Stokes in the laboratory of the United States Geological Survey. See Bull. U. S. Geol. Survey No. 228, p. 20, 1904.

[b] Volume on Deep-sea deposits, p. 198.

indicate a difference between them and the terrigenous deposits. The "red clay," for example, which covers 51,500,000 miles of the ocean floor at its greatest depths, is richer in iron than the average shale. The thickness of this deposit is unknown. There are also metamorphic rocks to be considered, such as chloritic and talcose schists, amphibolites, and serpentines; although their quantities are presumably too small to seriously modify the final averages. They might, however, help to explain a deficiency of magnesium which appears in the sedimentary analyses. Partly on account of these considerations, and partly because the sedimentary rocks contain water and carbon dioxide which have been added to the original igneous material, we can not recombine the composite analyses so as to reproduce exactly the composition of the primitive matter.[a] To do this it would be necessary also to allow for the oceanic salts, which represent, in part, at least, losses from the land; but that factor in the problem is perhaps the least embarrassing. Its magnitude is easily estimated, and it gives a measure of the extent to which the igneous rocks have been decomposed.

If we assume that all of the sodium in the ocean was derived from the leaching of the primitive rocks, and that the average composition of the latter is correct, as stated, it is easy to show that the marine portion is very nearly one-thirtieth of that contained in the 10-mile lithosphere. That is, the complete decomposition of a shell of igneous rock, one-third of a mile thick, would yield all the sodium in the ocean. Some sodium, however, is retained by the sediments, and the analyses show that it is about one-third of the total amount. That is, the oceanic sodium represents two-thirds of the decomposition, and the estimate must therefore be increased one-half. On this basis, a rocky shell one-half mile thick, completely enveloping the globe, would slightly exceed the amount needed to furnish the sodium of the sea and the sediments.

In order to make this estimate more precise, let us consider the detailed figures. The maximum allowance for the sodium in the ocean is 1.14 per cent. From my average the mean percentage of sodium in the igneous rocks is 2.56; Washington's figures give 2.90. Now putting the ocean at 7 per cent and the lithosphere at 93 per cent of the known matter, the following ratios between oceanic sodium and rock sodium are easily computed: Clarke, 1:29.8; Washington, 1:33.9. Hence the sodium in the ocean corresponds to a volume of igneous rocks, according to the first ratio, of 54,800,000 cubic miles, or, for the second estimate, of 48,200,000 cubic miles.

Suppose, however, that the average analyses do not represent the true composition of the primitive lithosphere. We may then test

[a] *For an elaborate attempt in this direction, see C. R. Van Hise, Treatise on metamorphism: Mon. U. S. Geol. Survey, vol. 47, pp. 947–1002, 1904.*

our figures by another assumption, namely, that the real average lies somewhere between two evident extremes—the composition of a rhyolite and that of a basalt. In 100 rhyolites, as shown in Washington's tables, the average percentage of sodium is 2.58, while for 220 basalts it is 2.40. These figures give ratios of 1:30.1 and 1:28.4, corresponding to rock volumes of 54,200,000 and 57,500,000 cubic miles, respectively—quantities of quite the same order as those previously calculated.

From the composite analyses of the sedimentary rocks the correction for their retained sodium can be determined. This sodium is chiefly, but not entirely, in the shales, and its amount is less than 1 per cent, with a probable value of 0.90. This is 35 per cent of the total sodium in the average igneous rock, and the oceanic sodium represents the 65 per cent removed by leaching. Allowing for this sedimentary sodium, the total sodium of the ocean and of the sedimentary rocks is represented by the ratio 65:100 = 54,800,000: 84,300,000, the last term giving the number of cubic miles of igneous rock which has undergone decomposition. This quantity is that of a rock shell completely enveloping the globe and 0.4215 mile, or 2,225 feet, thick. If we accept the highest ratio of all, that furnished by the average basalt, the thickness may be raised to 2,336 feet; while Washington's data will give a much lower figure. A further allowance of 10 per cent, which is excessive, for the increase in volume due to oxidation, carbonation, and absorption of water, will raise the thickness assignable to the sedimentaries from 2,225 to 2,447 feet, an amount still short of the half-mile estimate. No probable change in the composition of the lithosphere can modify this estimate very considerably; and since the ocean may contain primitive sodium, not derived from the rocks, the half mile must be regarded as a maximum allowance. If the primeval rocks were richer in sodium than those of the present day, a smaller mass of them would suffice; if poorer, more would be needed to account for the salt in the sea. Of the two suppositions, the former is the more probable; but neither assumption is necessary. If, however, we assume that our igneous rocks are not altogether primary, but that some of them represent re-fused or metamorphosed sedimentaries, we must conclude that they have been partly leached, and have therefore lost sodium. That is, the original matter was richer in sodium, and the half-mile estimate is consequently much too large.

From another point of view, the thinness of the sediments can be simply illustrated. The superficial area of the earth is 199,712,000 square miles, of which 55,000,000 are land. According to Geikie,[a] the mean elevation of all the continents is 2,411 feet. Hence, if all of the land now above sea level, 25,000,000 cubic miles, were spread uni-

[a] Text-book of Geology, 4th ed., vol. 1, p. 49, 1903.

formly over the globe, it would form a shell about 660 feet thick. If we assume this matter to be all sedimentary, which it certainly is not, and add to it any probable allowance for the sediments at the bottom of the sea, we shall still fall far short of the half-mile shell, which, on chemical evidence, is a maximum. In the following calculation this maximum will be taken for granted.

The relative proportions of the different sedimentary rocks within the half-mile shell can only be estimated approximately. Such an estimate is best made by studying the average igneous rock and determining in what way it can break down. A statistical examination of about 700 igneous rocks, which have been described petrographically, leads to the following rough estimate of their mean mineralogical composition:

Quartz	12.0
Feldspars	59.5
Hornblende and pyroxene	16.8
Mica	3.8
Accessory minerals	7.9
	100.0

The average limestone contains 76 per cent of calcium carbonate, and the composite analyses of shales and sandstones correspond to the subjoined percentages of component minerals:

Average composition of shale and sandstone.

	Shale.	Sandstone.
Quartz [a]	22.3	66.8
Feldspars	30.0	11.5
Clay [b]	25.0	6.6
Limonite	5.6	1.8
Carbonates	5.7	11.1
Other minerals	11.4	2.2
	100.0	100.0

[a] The total percentage of free silica.
[b] Probably sericite in part. In that case the feldspar figure becomes lower.

If, now, we assume that all of the igneous quartz, 12 per cent, has become sandstone, it will yield 18 per cent of that rock, which is evidently a maximum. Some quartz has remained in the shales. One hundred parts of the average igneous rock will form, on decomposition, less than 18 parts of sandstone.

The igneous rocks contain, as shown in the last analysis cited, 4.79 per cent of lime. This would form 8.55 per cent of calcium carbonate, or 11.2 per cent of an average limestone. But at least half of the lime has remained in the other sediments, so that its true proportion can not reach 6 per cent, or one-third the proportion of the sandstones. The remainder of the igneous material, plus some water

and minus oceanic sodium, has formed the siliceous residues which are grouped under the vague title of shale. Broadly, then, we may estimate that the lithosphere, within the limits assumed in this memoir, contains 95 per cent of igneous rock and 5 per cent of sedimentaries. If we assign 4.0 per cent to the shales, 0.75 per cent to the sandstones, and 0.25 per cent to the limestones, we shall come as near the truth as is possible with the present data.[a] On this basis, the average composition of the lithosphere may be summed up as shown in the subjoined table. The analyses of the sedimentary rocks are recalculated to 100 per cent.

Average composition of the lithosphere.

	Igneous (95 per cent).	Shale (4 per cent).	Sandstone (0.75 per cent).	Limestone (0.25 per cent).	Average.
SiO_2	59.87	58.10	78.33	5.19	59.79
Al_2O_3	15.02	15.40	4.77	.81	14.92
Fe_2O_3	2.58	4.02	1.07	.54	2.63
FeO	3.40	2.45	.30	.....	3.33
MgO	4.06	2.44	1.16	7.89	3.98
CaO	4.79	3.11	5.50	42.57	4.82
Na_2O	3.39	1.30	.45	.05	3.28
K_2O	2.93	3.24	1.31	.33	2.96
H_2O	1.86	5.00	1.63	.77	1.98
TiO_2	.72	.65	.25	.06	.71
ZrO_2	.03	.....	.....	.....	.03
CO_2	.52	2.63	5.03	41.54	.74
P_2O_5	.26	.17	.08	.04	.25
S	.11	.....	.....	.09	.10
SO_3	.....	.64	.07	.05	.02
Cl	.07	.....	.....	.02	.07
F	.02	.....	.....	.....	.02
BaO	.11	.05	.05	.....	.10
SrO	.04	.....	.....	.....	.04
MnO	.10	.....	.....	.05	.09
NiO	.03	.....	.....	.....	.03
Cr_2O_3	.05	.....	.....	.....	.05
V_2O_3	.03	.....	.....	.....	.02
Li_2O	.01	.....	.....	.....	.01
C	.....	.80	.....	.....	.03
	100.00	100.00	100.00	100.00	100.00

The final average differs from that of the igneous rocks alone only within the limits of uncertainty due to experimental errors and to the assumptions made as to the relative proportions of the sedimentaries. If the work were ideally exact, the last column of figures should differ from the first symmetrically, being higher in water and carbon dioxide and lower in all other constituents. Lime and potash, however, show small gains, which are abnormal and indicative to some extent of the errors above mentioned. It is possible that excessive weight has been assigned to the limestones, but on that theme it is hardly worth while to speculate. The values chosen for the sediments are approximations only, and nothing more can be claimed for

[a] C. R. Van Hise (Treatise on metamorphism: Mon. U. S. Geol. Survey, vol. 47, p. 940, 1904) divides the sedimentary rocks into 65 per cent shales, including all pelites and psephites, 30 per cent sandstones, and 5 per cent limestones. W. J. Mead (Jour. Geol., vol. 15, p. 238, 1907), by a graphic process, distributes the sedimentaries into 80 per cent shales, 11 per cent sandstones, and 9 per cent limestones.

them. They seem to be near the truth—as near as we can approach with data which are necessarily imperfect—and so they may be allowed to stand without further emendation.

Now, with the help of this new average, we are in a position to compute the relative abundance of the chemical elements in all known terrestrial matter. For this purpose, the column is restated in elementary form, with an arbitrary allowance of 0.5 per cent for all the elements not specifically included in it. As for the atmosphere, it is represented in the final result by 0.02 per cent of nitrogen, which is a little too low. The mean composition of the lithosphere, the ocean, and the atmosphere, then, is as follows:

Average composition of lithosphere, ocean, and atmosphere.

	Lithosphere (93 per cent).	Ocean (7 per cent).	Average, including nitrogen.
Oxygen	47.07	85.79	49.78
Silicon	28.06	.....	26.08
Aluminum	7.90	.....	7.34
Iron	4.43	.....	4.11
Calcium	3.44	.05	3.19
Magnesium	2.40	.14	2.24
Sodium	2.43	1.14	2.33
Potassium	2.45	.04	2.28
Hydrogen	.22	10.67	.95
Titanium	.40	.....	.37
Carbon	.20	.002	.19
Chlorine	.07	2.07	.21
Bromine	.....	.008	.....
Phosphorus	.11	.....	.11
Sulphur	.11	.09	.11
Barium	.09	.....	.09
Manganese	.07	.....	.07
Strontium	.03	.....	.03
Nitrogen	.....	.....	.02
Fluorine	.02	.....	.02
All other elements	.50	.....	.48
	100.00	100.00	100.00

The briefest scrutiny of the foregoing tables will show that in the lithosphere the lighter elements predominate over the heavier. All the abundant elements fall below atomic weight 56,[a] and above that, in the analyses given on page 26, only nickel, zirconium, strontium, and barium appear. The heavy metals, as a rule, occur in apparently trivial quantities. Since, however, the mean density of the earth is about double that of the rocks at its surface, it has sometimes been supposed that the heavier substances may be concentrated in its interior, a supposition which is possibly true, but unprovable. If the globe is similar in constitution to a meteorite, we should expect iron and nickel to be abundant in its mass as a whole; but this, after all, is nothing more than a suspicion. One fact only seems to shed a clear light upon the problem. A mixture of all the elements, in equal proportions by weight and in the free state, would have a density greater than that of the earth. Combination

[a] The atomic weight of iron is 55.9 when O=16.

would increase the density of the mixture, and the effect of internal pressure would make it greater still. It is therefore plain that in the earth as a whole, whatever may be the composition or condition of its interior, the lighter elements are more abundant than the denser. Thus far we can go, but no farther. Of the actual proportions we know nothing.

Although the chemical elements are analytically distinct, they are by no means unrelated. On the contrary, they fall into a number of natural groups; and within each one of these, the members not only form similar compounds, but also exhibit, as a rule, a regular gradation of properties. This relationship has led to an important generalization—the periodic law, or, more precisely, the periodic classification of the elements; and in its light some of their associations become extremely suggestive.

When the elements are tabulated in the order of their atomic weights, the periodicity shown in the following scheme at once becomes evident:

Periodic classification of the elements.

Series.	Group 0.	Group 1.	Group 2.	Group 3.	Group 4.	Group 5.	Group 6.	Group 7.	Group 8.
1		H=1							
2	He=4	Li=7	Gl=9.1	B=11	C=12	N=14	O=16	F=19	
3	Ne=20	Na=23	Mg=24.4	Al=27.1	Si=28.4	P=31	S=32	Cl=35.45	
4	A=39.9	K=39.1	Ca=40.1	Sc=44.1	Ti=48.1	V=51.2	Cr=52.1	Mn=55	Fe=55.9 Ni=58.7 Co=59
5		Cu=63.6	Zn=65.4	Ga=70	Ge=72.5	As=75	Se=79.2	Br=79.95	
6	Kr=81.8	Rb=85.5	Sr=87.6	Y=89	Zr=90.6	Cb=94	Mo=96	——	Ru=101.7 Rh=103 Pd=106.5
7		Ag=107.93	Cd=112.4	In=115	Sn=119	Sb=120.2	Te=127.6	I=126.97	
8	Xe=128	Cs=132.9	Ba=137.4	La=138.9	Ce=140.25	——	——	——	— — —
9	——	——	——	——	——	——	——	——	
10	——	——	——	——	——	Ta=181	W=184	——	Os=191 Ir=193 Pt=194.8
11	——	Au=197.2	Hg=200	Tl=204.1	Pb=206.9	Bi=208	——	——	
12	——	——	Ra=225	——	Th=232.5	U=238.5	——	——	— — —

In each vertical column the elements are closely allied, forming the natural groups to which reference has already been made. The alkaline metals; the series calcium, strontium, and barium; the carbon group, and the halogens are examples of this regularity. In other words, similar elements appear at regular intervals and occupy similar places. If we follow any horizontal line of the table from left to right, a progressive change of valency is shown, and in both directions a systematic variation of properties is manifested. Broadly stated, the properties of the elements, chemical and physical, are periodic functions of their atomic weights, and this is the most general expression of the periodic law. At certain points in the table gaps are left, and these are believed to correspond to unknown elements. For three of the spaces which were vacant when Mendeléef announced the law, he ventured to make specific predictions, and his prophesies have been verified. The elements scandium, gallium, and germanium were described by him in advance of their actual discovery, and in every essential particular his predictions were correct. Atomic weights, densities, melting points, and the character of the compounds which the metals should form were foretold, and in each case with a remarkable approximation to accuracy. This power of prevision is characteristic of all valid generalizations, and its exhibition in the periodic system led to the speedy adoption of the latter. Even radium, the youngest member of the elementary series, falls into its proper place in line with its near relative, barium.

An elaborate discussion of the periodic law would be out of place in a memoir of this kind, and its details must be sought elsewhere.[a] Only its application to geochemistry can be considered now. In the first place, on looking at the table vertically it is noticeable that members of the same elementary group are commonly associated in nature. That is, similar elements have similar properties, form similar compounds, and give similar reactions, and because of the conditions last mentioned they are usually deposited together. Thus the platinum metals are seldom found apart from one another; the rare earths are invariably associated; chlorine, bromine, and iodine occur under closely analogous circumstances; selenium is obtained from native sulphur; cadmium is extracted from ores of zinc, and so on through a long list of regularities. The group relations govern many of the associations which we actually observe, although they are modified by the conditions which influence chemical union. Even here, however, regularities are still apparent. In combination unlike elements seek one another, and yet there appears to be a preference

[a] See especially F. P. Venable, Development of the Periodic Law, Easton, Pennsylvania, 1896. The larger manuals of chemistry all discuss the law somewhat fully. T. Carnelley (Ber. Deutsch. chem. Gesell., vol. 17, p. 2287, 1884) has especially studied the bearings of the periodic law on the occurrence of the elements in nature.

for neighbors rather than for substances that are more remote. For example, silicon follows aluminum in the order of atomic weights, and silicates of aluminum are by far the most abundant minerals. The next element in order is phosphorus, and aluminum phosphates are more common and more numerous than the precisely similar arsenates. On the other hand, copper, whose atomic weight is nearer that of arsenic, oftener forms arsenates, although its phosphates are also known. An even more striking example is furnished by the compounds of the elementary series oxygen, sulphur, selenium, and tellurium. Oxides and oxidized salts of many elements are found in the mineral kingdom, and most commonly of metals having low atomic weights. From manganese and iron upward, sulphides are abundant; but selenium and tellurium are more often united with the heavier metals silver, mercury, lead, or bismuth, and tellurium with gold. The elements of high atomic weight appear to seek one another, a tendency which is indicated in many directions, even though it can not be stated in the form of a precise law. The general rule is evident, but its significance is not so clear.

We have already seen that the most abundant elements are among those of relatively low atomic weight, and this observation may be verified still further. In general, with some exceptions, the abundance of an element within a group depends on its atomic weight, but not in a distinctly regular manner. For instance, in the alkaline series, lithium is widely diffused in small quantities, sodium and potassium are very abundant, rubidium is scarce, and cæsium is the rarest of all. The same rule holds in the tetrad group—carbon, silicon, titanium, zirconium, and thorium, and in the halogens—fluorine, chlorine, bromine, and iodine. In each of these series the abundance increases from the first to the second member and then diminishes to the end. In the oxygen group, however, the first member is much the most abundant and after that a steady decrease to tellurium is shown. An exception to the rule is found in the metals of the alkaline earths, for strontium is less abundant than barium, at least so far as our evidence now goes. Other exceptions also seem to exist, but they are possibly apparent and not real. In the light of better data than we now possess the anomalies may disappear. Here again we are dealing with an evident tendency of which the meaning is yet to be discovered. That the abundance and associations of the elements are connected with their position in the periodic system seems, however, to be clear. The coincidences are many, the exceptions are comparatively few.

So much for the chemical side of the question. On the geological side other considerations must be taken into account, and it is easily seen that the periodic law covers only a part of the elementary associations. *Rocks are formed* from magmas in which many and com-

plex reactions are possible and the simpler rules governing single minerals are no longer directly applicable. Some regularities, however, can be recognized, and certain elements are in a sense characteristic of certain kinds of rock. In the summary already given some of these regularities are indicated. They have been generalized by J. H. L. Vogt [a] somewhat as follows: In the highly siliceous rocks we find the largest proportions of the alkalies, of the rare earths, and of the elements glucinum, tungsten, molybdenum, uranium, columbium, tantalum, tin, zirconium, thorium, boron, and fluorine. The rocks low in silica are richer in the alkaline earths, and in magnesium, iron, manganese, chromium, nickel, cobalt, vanadium, titanium, phosphorus, sulphur, chlorine, and the platinum metals. To some extent, of course, these groups overlap, for between the two rock classes no definite line can be drawn. But the minerals of the rare earths, with the columbo-tantalates, tinstone, beryl, etc., seldom if ever occur except in rocks which approach the granites in general composition; whereas chromium, nickel, and the platinum metals are most commonly associated with peridotites or serpentines. For these differences in distribution no complete explanation is at hand; but they are probably due to differences of solubility. If we conceive of a mediosilicic magma in process of differentiation into a salic and a femic portion, the minor constituents will evidently tend to concentrate, each in the magmatic fraction in which it is most soluble. Solubilities of this order are yet to be experimentally studied.

[a] Zeitschr. prakt. Geol., 1898, p. 324.

CHAPTER II.

THE ATMOSPHERE.

COMPOSITION OF THE ATMOSPHERE.

The outer, gaseous envelope of our globe—the atmosphere—is commonly regarded as rather simple in its constitution, and indeed so it is, in comparison with the complexity of the ocean and the solid rocks beneath. Broadly considered, it consists of three chief constituents—namely, oxygen, nitrogen, and argon—commingled with various other substances in relatively small amounts, which may be classed, with some exceptions, as impurities. The three essential elements of air are mixed, but not combined; and they vary but little in their proportions. They constitute what may be called normal or average air. I am indebted to Sir William Ramsay for the following percentage estimate of their relative quantities.

The principal constituents of the atmosphere.

	By weight.	By volume.
Oxygen	23.024	20.941
Nitrogen	75.539	78.122
Argon	1.437	.937
	100.000	100.000

With the argon occur certain rare gases whose proportions Ramsay estimates as follows:

Helium, 1 to 2 parts per million.
Neon, 1 to 2 parts per hundred thousand.
Krypton, 1 part in 20 millions.
Xenon, 1 part in 170 millions.

These gases, with argon, are absolutely inert; and as they seem to have little geological significance they demand no further consideration here.

In addition to the elements enumerated above, ordinary air contains, in varying quantities, aqueous vapor, hydrogen dioxide, carbon dioxide, ammonia and other compounds of nitrogen, sometimes sulphur, traces of hydrogen, organic matter, and suspended solids; and

among these substances some of the most active agents in producing geological changes are found. It will be advantageous to consider them separately and somewhat in detail; and in so doing we shall see that they all form part of a great system of circulation in which the atmosphere is adding matter to the solid globe and receiving matter from it in return. Between these gains and losses no balance can be struck, and yet certain tendencies appear to be distinctly manifested.

In a roughly approximate way it is often said that air consists of four-fifths nitrogen and one-fifth oxygen, and this is nearly true. The proportions of the two gases are almost constant, but not absolutely so; for the innumerable analyses of air reveal variations larger than can be ascribed to experimental errors. A few of the better determinations are given in the subjoined table, stated in percentages by volume of oxygen. They refer, of course, to air dried and freed from all extraneous substances.

Determinations of oxygen in air, in percentage by volume.

Analyst.	Locality of samples.	Number of analyses.	Minimum.	Maximum.	Mean.
V. Regnault [a]	Paris	100	20.913	20.999	20.960
R. W. Bunsen [a]	Heidelberg	28	20.840	20.970	20.924
R. Angus Smith [a]	Manchester	32	20.78	21.02	20.943
Do	Mountains of Scotland	34	20.80	21.18	20.970
U. Kreusler [b]	Near Bonn	45	20.901	20.939	20.922
W. Hempel [c]	Dresden	46	20.877	20.971	20.930
W. Hempel [d]	Tromsoe	41	.....	21.00	20.92
Do	Para	28	20.86	.....	20.89
A. Muntz and E. Aubin [e]	Cape Horn	20	20.72	20.97	20.864
E. W. Morley [f]	Cleveland, Ohio	45	20.90	20.95	20.933

[a] See R. Angus Smith's excellent book, Air and Rain, London, 1872. This work contains hundreds of other analyses.
[b] Ber. Deutsch. chem. Gesell., vol. 20, p. 991, 1887.
[c] Ber. Deutsch. chem. Gesell., vol. 18, p. 1800, 1885.
[d] Ber. Deutsch. chem. Gesell., vol. 20, p. 1864, 1887.
[e] Compt. Rend., vol. 102, p. 422, 1886.
[f] Cited by Hempel in Ber. Deutsch. chem. Gesell., vol. 20, p. 1864, 1887.

Some of these variations are doubtless due to different methods of determination, but others can not be so interpreted. Hempel, comparing his analyses of air from Tromsoe, Norway, and Para, Brazil, infers that the atmosphere is slightly richer in oxygen near the poles than at the equator, an inference that would seem to need additional data before it can be regarded as established. The most significant variation of all, however, has been pointed out by E. W. Morley.[a] As oxygen is heavier than nitrogen, it has been supposed that the upper regions of the atmosphere should show a small deficiency in oxygen, as compared with air from lower levels; although analyses of samples collected on mountain tops and from balloons have not borne out this suspicion. It is also supposed that severe depressions of temperature, the so-called "cold waves," are connected with descents of air from very great elevations. Morley's analyses, conducted daily from January, 1880, to April, 1881, at

[a] *Am. Jour. Sci., 3d ser., vol. 18, p. 168, 1879; vol. 22, p. 417, 1881.*

Hudson, Ohio, sustain this belief. Every cold wave was attended by a deficiency of oxygen, the determinations, by volume, ranging from 20.867 to 21.006 per cent, a difference far greater than could be attributed to errors of measurement. Air taken at the surface of the earth seems to show a very small concentration of the denser gas, oxygen.

By electrical discharges in the atmosphere some oxygen is probably converted into its allotropic modification—ozone; although this point is not absolutely established. Hydrogen dioxide is formed in the same way, and also oxides of nitrogen, and between these substances, in minute traces, it is not easy to discriminate. They all act upon the usual reagent, iodized starch paper, and therefore the identification of ozone remains somewhat uncertain. Both ozone and hydrogen dioxide are powerful oxidizing agents, and either or both of them play some part in transforming organic matter, suspended in the air, into carbon dioxide, water, and probably ammonium nitrate; but the magnitude of the changes thus brought about can not be estimated with any degree of definiteness.

Wherever animals breathe or fire burns oxygen is being withdrawn from the air and locked up in compounds. By growing plants, under the influence of sunlight, one of these compounds, carbon dioxide, is decomposed and oxygen is liberated; but the losses exceed the gains. So also, when the weathering of a rock involves the change of ferrous into ferric compounds oxygen is absorbed, and only a portion of it is ever again released. The atmosphere, then, is slowly being depleted of its oxygen, but so slowly that no chemical test is ever likely to detect the change.

The nitrogen of the atmosphere varies reciprocally with the oxygen, the one gaining relatively as the other loses. But here again special variations need to be considered. By electrical discharges, as we have already seen, oxides of nitrogen are produced, yielding with the moisture of the air nitric and nitrous acids. Through the agency of microbes certain plants withdraw nitrogen directly from the air and thus remove it temporarily from atmospheric circulation. By the decay or combustion of organic matter some of this nitrogen is returned, partly in the free state and partly in gaseous combinations. The significance of these changes will be more clearly seen when we consider the subject of rain. It is enough to note here that all the nitrogen of organic matter came originally from the atmosphere, and that at the same time a larger quantity of oxygen was also removed. The relative proportions of the two gases are evidently undergoing continuous modification.

According to Armand Gautier[a] free hydrogen is present in the atmosphere, together with other combustible gases. Air collected

[a] *Ann. chim. phys.*, 7th ser., vol. 22, p. 5, 1901.

at the Roches-Douvres light-house, off the coast of Brittany, yielded 1.21 milligrams of hydrogen in 100 liters. Air from the streets of Paris was found to contain the following substances, in cubic centimeters per 100 liters:

Free hydrogen	19.4
Methane	12.1
Benzene and its homologues	1.7
Carbonic oxide, with traces of olefines and acetylenes	.2

In short, air, according to Gautier, contains by volume about 1 part in 5,000 of free hydrogen, although Rayleigh's[a] experiments on the same subject would indicate that this estimate is at least six times too large. It is known, however, that hydrogen is emitted by volcanoes in considerable quantities, and Gautier has extracted the gas from granite and other rocks. One hundred grams of granite gave him 134.61 cubic centimeters of hydrogen, with other gases, and from this fact important inferences can be drawn. At the proper point, farther on, this subject will be discussed more fully. As for the hydrocarbons, their chief source is doubtless to be found in the decomposition of organic matter, methane or marsh gas in particular being clearly recognized among the exhalations from swamps. According to H. Henriet,[b] formaldehyde exists in the atmosphere in quantities ranging from 2 to 6 grams in 100 cubic meters. Bodies of this class are impurities in the atmosphere, and should not be reckoned among its normal constituents.

Sulphur compounds, which are also contaminations of the atmosphere, occur in air in variable quantities. Hydrogen sulphide is a product of putrefaction, but it is also given off by volcanoes, together with sulphur dioxide. The latter substance is also produced by the combustion of coal, and is therefore abundant in the air of manufacturing districts. At Lille, for example, A. Ladureau[c] found 1.8 cubic centimeters of SO_2 in a cubic meter of air. It undergoes rapid oxidation in presence of moisture, being converted into sulphuric acid, and that compound, either free or represented by ammonium sulphate, is brought back to the surface of the earth by rain. In experiments running over five years at Rothamsted, England, R. Warington[d] found that the equivalent of 17.26 pounds of SO_3 was annually poured upon each acre of land at that station. Quantities of this order can not be ignored in any study of chemical erosion.

One of the most constant and most important of the accessory constituents of air is carbon dioxide. It is normally present to the

[a] Phil. Mag., 6th ser., vol. 3, p. 416, 1902. See also a criticism by A. Leduc, Compt. Rend., vol. 135, p. 860, 1902; and replies to Rayleigh and Leduc by Gautier, idem, vol. 135, p. 1025; vol. 136, p. 21. Also a paper by G. D. Liveing and J. Dewar, Proc. Roy. Soc., vol. 67, p. 468, 1900.

[b] Compt. Rend., vol. 138, pp. 203, 1272, 1904.

[c] Ann. chim. phys., 5th ser., vol. 29, p. 427, 1883.

[d] Jour. Chem. Soc., vol. 51, p. 500, 1887.

extent of about 3 volumes in 10,000, with moderate variations above and below that figure. In towns its proportion is higher; in the open country it is slightly lower; but the agitation of winds and atmospheric currents prevent its excessive accumulation at any point. Only a few illustrations of its quantity need be given here,[a] abnormal extremes being avoided.

Determinations of carbon dioxide in air.

Analyst.	Locality.	Number of determinations.	CO_2 (volumes per 10,000 of air).
J. Reiset[a]	Paris		3.027
Do	Near Dieppe	92	2.942
T. C. Van Nüys and B. F. Adams[b]	Bloomington, Indiana	18	2.816
A. Petermann and J. Graftiau[c]	Gembloux, Belgium	525	2.94
E. A. Letts and R. F. Blake[d]	Belfast	46	2.91

[a] Compt. Rend., vol. 88, p. 1007, 1879.
[b] Am. Chem. Jour., vol. 9, p. 64, 1887.
[c] Cited by Letts and Blake.
[d] Sci. Proc. Roy. Dublin Soc., vol. 9, pt. 2, pp. 107–270, 1900.

Thousands of other determinations having meteorological, sanitary, or agricultural problems in view are recorded, but their discussion does not fall within the scope of this work.[b] That in general terms the proportion of carbon dioxide in the atmosphere is very nearly uniform is the point that concerns us now. How is this approximate constancy maintained?

From several sources carbon dioxide is being added to the air. The combustion of fuels, the respiration of animals, and the decay of organic matter all generate this gas. From mineral springs and volcanoes it is evolved in enormous quantities. According to J. B. Boussingault,[c] Cotopaxi alone emits more carbon dioxide annually than is generated by life and combustion in a city like Paris, which in 1844 threw into the air daily almost 3,000,000 cubic meters of the gas. Since that time the population of Paris has more than doubled, and the estimate must be correspondingly increased. The annual consumption of coal, estimated by A. Krogh[d] at 700,000,000 tons in 1902, adds yearly to the atmosphere about one-thousandth of its

[a] Very elaborate data are given in R. Angus Smith's Air and Rain, to which reference has already been made. See also the excellent paper by E. A. Letts and R. F. Blake, in Sci. Proc. Roy. Dublin Soc., vol. 9, pt. 2, pp. 107–270, 1900. The latter memoir contains a summary of all the determinations previously made, with a very thorough bibliography of the subject.

[b] For example, E. L. Moss (Proc. Roy. Dublin Soc., 2d ser., vol. 2, p. 34, 1878) found that Arctic air is richer in carbon dioxide than the air of England. In air from Greenland A. Krogh (Meddelelser om Groenland, vol. 26, p. 409, 1904) found the proportion of carbon dioxide to vary from 2.5 up to 7 parts in 10,000. The proportion determined by R. Legendre (Compt. Rend., vol. 143, p. 526, 1906) in ocean air was 3.35 in 10,000.

[c] E. A. Letts and R. F. Blake, Sci. Proc. Roy. Dublin Soc., vol. 9, pt. 2, pp. 159, 175, 1900. J. B. Boussingault, Ann. chim. phys., 3d ser., vol. 10, p. 456, 1844.

[d] Meddelelser om Groenland, vol. 26, p. 419, 1904.

present content in carbon dioxide.[a] In a thousand years, then, if the rate were constant and no disturbing factors interfered, the amount of CO_2 in the atmosphere would be doubled. Figures like these give some faint notion of the magnitude of the chemical processes now under consideration. There are other smaller sources of supply, also, such as the solution of carbonate rocks, but we need not dwell on them at present.

On the other side of the account two large factors are to be considered—first, the decomposition of carbon dioxide by plants, with liberation of oxygen; and second, the consumption of carbon dioxide in the weathering of rocks. To neither of these factors can any precise valuation be given, although various writers have attempted to estimate their magnitude. E. H. Cook,[b] for instance, from very uncertain data, computes that leaf action alone more than compensates for the production of carbon dioxide; and that without such compensation the quantity present in the air would double in about one hundred years. Some of the carbon dioxide thus absorbed is annually returned to the atmosphere by the autumnal decay of leaves, but part of it is permanently withdrawn. T. Sterry Hunt[c] illustrates the effect of weathering by the statement that the production from orthoclase of a layer of kaolin, 500 meters thick and completely enveloping the globe, would consume 21 times the amount of carbon dioxide now present in the atmosphere. He also computes that a similar shell of pure carbon, of density 1.25 and 0.7 meter in thickness, would require for its combustion all the oxygen of the air. Such estimates may have slight numerical value, but they serve to show how vast and how important the processes under consideration really are. The carbon of the coal measures and of the sedimentary rocks has all been drawn, directly or indirectly, from the atmosphere. Soluble carbonates, produced by weathering, are washed into the ocean, and are there transformed into sediments, into shells, or into coral reefs; but the atmosphere was the source from which all or nearly all of the carbon thus stored away was taken.

From a geological standpoint the carbon dioxide of the air has a twofold significance—first, as a weathering agent, and second, as a regulator of climate. The subject of weathering will receive due consideration later; but the climatic value of atmospheric carbon may properly be mentioned now. Both carbon dioxide and aqueous vapor serve as selective absorbents for the solar rays, and, by blanket-

---

[a] C. R. Van Hise (Treatise on metamorphism: Mon. U. S. Geol. Survey, vol. 47, p. 964, 1904) estimates the total CO_2 in the atmosphere at 2,381,400,000,000 metric tons.

[b] Phil. Mag., 5th ser., vol. 14, p. 387, 1882.

[c] Am. Jour. Sci., 3d ser., vol. 19, p. 349, 1880.

ing the earth, they help to avert excessive changes of temperature. On the physical side, and as regards carbon dioxide, this question has been ably discussed by S. Arrhenius,[a] who argues that if the quantity of the gas in the atmosphere were increased about threefold, the mean temperature of the Arctic regions would rise 8° or 9°. A corresponding loss of carbon dioxide would lead to a lowering of temperature; and in variations of this kind we may find an explanation of the alterations of climate which have undoubtedly occurred. The glacial period, for example, may have been due to a loss of carbon dioxide from the atmosphere. To account for such gains and losses, Arrhenius cites with great fullness the work of Högbom, who regards volcanoes as the chief source of supply. Just as individual volcanoes vary in activity from quietude to violence, so the volcanic activity of the globe has varied from time to time. During periods of great energy the carbon dioxide of the air would be abundant; at other times its quantity would be smaller. Högbom estimates that the total carbon of the atmosphere would form a layer 1 millimeter thick, enveloping the entire globe. The quantity of carbon in living matter he regards as being of the same order, neither many fold greater nor many fold less. The combustion of coal he reckons as about balancing the losses of the atmosphere by weathering; and in this way he reaches his conclusion that volcanic action is the important factor of the problem. Högbom also computes that a shell of limestone 100 meters thick would be equivalent to about 25,000 times the present atmospheric content of carbon dioxide. In calculations of this sort there is a certain fascination, but their chief merit seems to lie in their suggestiveness. How far the figures given by Högbom are consistent with those of Hunt is a question which I shall leave for others to determine.

One other regulative agency remains to be mentioned. The ocean is a vast reservoir of carbon dioxide, which is partly in solution and partly combined. Between the surface of the sea and the atmosphere there is a continual interchange, each one sometimes losing and sometimes gaining gas. Upon this fact a theory of climatic variations has been founded, and in another chapter, upon the ocean, it will be stated and discussed.

RAINFALL.

Among all the constituents of the atmosphere, aqueous vapor is the most variable in amount and the most important geologically. It is not merely a solvent and disintegrator of rocks, but it is also a carrier, distributing other substances and making them more active. To the circulation of atmospheric moisture we owe our rivers, and through

[a] Phil. Mag., 5th ser., vol. 41, p. 237, 1896.

them erosion is effected. The process of erosion is partly chemical and partly mechanical, and the two modes of action reenforce each other. By flowing streams the rocks are ground to sand, and so new surfaces are exposed to chemical attack. On the other hand, chemical solution weakens the rocks and renders them easier to remove mechanically. As water evaporates from the surface of the sea, it lifts, by inclusion in vapory vesicles, great quantities of saline matter, which are afterwards deposited by rainfall upon the land. It is through the agency of rain or snow that the atmosphere produces its greatest geological effects; but the chemical side of its activity is all that concerns us now. Aqueous vapor dissolves and concentrates the other ingredients of air, and brings them to the ground in rain.

In one sense oxygen is the most active of the atmospheric gases, but without the aid of moisture its effectiveness is small. Perfectly dry oxygen is comparatively inert; for example, phosphorus burns in it slowly and without flame, but the merest trace of water gives the gas its usual activity.[a] More than this trace is always present in the air, and when it condenses to rain it dissolves oxygen, nitrogen, carbon dioxide, and other gases. These substances differ in solubility, and therefore dissolved air contains them in abnormal proportions. In air extracted from rain water, Humboldt and Gay-Lussac found 31 per cent of oxygen. R. W. Bunsen,[b] who examined air from rain water at different temperatures, gives the following table to illustrate its composition by volume:

Composition of dissolved air at different temperatures.

	0°.	5°.	10°.	15°.	20°.
N_2	63.20	63.35	63.49	63.62	63.69
O_2	33.88	33.97	34.05	34.12	34.17
CO_2	2.92	2.68	2.46	2.26	2.14
	100.00	100.00	100.00	100.00	100.00

In air from sea water O. Petterson and K. Sondén[c] found nearly 34 per cent of oxygen. In dissolved air, then, and especially in rain, oxygen is concentrated, and in that way its effectiveness is increased. The same is true of carbon dioxide. Rain brings it to the surface of the earth, where its eroding power comes into play.

As a carrier of ammonia, nitric acid, sulphuric acid, and chlorine, rain water performs a function of the highest significance to agriculture, but whose geological importance has not been generally recognized. Rain and snow collect these impurities from the atmosphere,

[a] See H. Brereton Baker, Proc. Roy. Soc., vol. 45, p. 1, 1888.

[b] Liebig's Annalen, vol. 93, p. 48, 1855. See also M. Baumert, idem, vol. 88, p. 17, 1853, for evidence of the same order.

[c] Ber. Deutsch. chem. Gesell., vol. 22, p. 1439, 1889.

in quantities which vary with local conditions, and redistribute them upon the soil. Many analyses of rain water have therefore been made, not only at agricultural experiment stations, but also for sanitary purposes, and a few of the results obtained are given below.[a] A figure for sulphuric acid has already been cited. The values given are stated in pounds per acre per annum brought to the surface of the earth at the several stations named. For nitrogen compounds the data are as follows:

Nitrogen brought to the surface of the earth by rain.

[Pounds per acre per annum.]

Locality.	Nitrogen.			Remarks.
	Ammoniacal.	Nitric.	Total.	
Rothamsted, England[a]	2.406			5 years' average.
Do.[b]	2.823	0.917	3.74	In 1888–89.
Near Paris[c]			8.93	11 years' average.
Caracas, Venezuela[d]		.516		
Gembloux, Belgium[e]			9.20	2¼ years' average.
Barbados[f]	1.009	2.443	3.452	5 years' average.
British Guiana[f]	1.351	2.190	3.541	7 years' average.
Kansas[g]	2.63	1.06	3.69	3 years' average.
Utah[h]	5.06	.356	5.42	Do.
Mississippi[i]			3.636	Do.

[a] R. Warington, Jour. Chem. Soc., vol. 51, p. 500, 1887.
[b] R. Warington, Jour. Chem. Soc., vol. 55, p. 537, 1889.
[c] Albert Levy, Jour. Chem. Soc., vol. 56, p. 299, 1889. (Abstract.) 10.01 kilos per hectare.
[d] A. Muntz and V. Marcano, Compt. Rend., vol. 108, p. 1062, 1889.
[e] A. Petermann and J. Graftiau, Jour. Chem. Soc., vol. 64, abst. ii, p. 548, 1893. 10.31 kilos per hectare.
[f] J. B. Harrison and J. Williams, Jour. Am. Chem. Soc., vol. 19, p. 1, 1897.
[g] G. H. Failyer and Breese, Second Ann. Rept. Exper. Sta., Kansas Agric. Coll., 1889.
[h] Erwin, Fourth Ann. Rept. Utah Agric. Coll. Exper. Sta., 1893.
[i] Hutchinson, Tenth Ann. Rept. Mississippi Agric. and Mechan. Coll. Exper. Sta., 1897. See also Eighth Ann. Rept.

In most cases ammonia is in excess over nitric acid; but in the Tropics the reverse seems to be true. The substance actually brought to earth, then, is in great part ammonium nitrate, but the conditions are modified when hydrochloric or sulphuric acid happens to be present in the air. A large part of the combined nitrogen has of course been added to the atmosphere by organic decomposition at the surface of the earth; but some of it is due, as we have already seen, to electrical discharges during thunderstorms. The geological significance of free acids in rain is obvious, for it means an increase in the eroding power of water. Furthermore, in this circulation of nitrogen between the ground and the air, the ground gains more than it loses. All of the nitrogen thus fixed in combination is not released again to the atmosphere; only a part so returns.[b]

[a] For the older data see R. Angus Smith, Air and Rain, London, 1872.

[b] T. Schloesing (Contributions à l'étude de la chimie agricole, p. 55, 1888) estimates the average ammonia in the atmosphere at 0.02 milligram per cubic meter. This amounts to 1,600 grams over every hectare of the earth's surface.

The figures for atmospheric chlorine are even more surprising; but they represent in general salt raised by vapor from the ocean. Where chemical industries are carried on, free hydrochloric acid may enter the air, and some hydrochloric acid is also evolved from volcanoes; but these are minor factors of little more than local significance. Chlorine is abundant in the air only near the sea, and its proportion rapidly diminishes as we recede from the coast. This is clearly shown by the "chlorine map" of Massachusetts,[a] and by several later documents of the same kind, in which the "normal chlorine" of the potable waters is indicated by isochlors that follow the contour of the shore. Near the ocean the waters are rich in chlorides, which diminish rapidly as we follow the streams inland.

The amount of salt precipitated by rain upon the land is by no means inconsiderable. For quantitative data a few examples must suffice, stated in the same way as for nitrogen.

Chlorides brought to the surface of the earth by rain.

[Pounds per acre per annum.]

Locality.	Chlorine.	Sodium chloride.	Remarks.
Cirencester, England [a]	.....	36.10	26 years' average.
Rothamsted, England [b]	14.40	24	
Perugia, Italy [c]	.....	37.95	In 1887.
Barbados [d]	116.98	.....	5 years' average.
British Guiana [d]	108.613	.....	7 years' average.

[a] E. Kinch, Jour. Chem. Soc., vol. 77, p. 1271, 1900. Amount largest in winter, when the prevailing wind is off the Bristol Channel.
[b] R. Warington, Jour. Chem. Soc., vol. 51, p. 500, 1887.
[c] G. Bellucci, Jour. Chem. Soc., abstract, vol. 56, p. 299, 1899. 42.531 kilos per hectare.
[d] J. B. Harrison and J. Williams, Jour. Am. Chem. Soc., vol. 19, p. 1, 1897.

Warington (loc. cit.) also cites the work at Lincoln, New Zealand, by Gray, who gives the following average composition (in parts per million) of the impurities in rain water at that point during two years:

Cl	7.74
SO_3	2.01
N in NH_3	.12
N in nitrates	.14
N, albuminoid	.09

Total dissolved matter, 23.6 parts per million.

[a] See T. M. Drown, in Rept. Massachusetts State Board of Health, etc., vol. 1, December, 1889. Mrs. Ellen S. Richards, who was associated with Drown in this investigation, has since published, jointly with A. T. Hopkins, a similar map of Jamaica (Tech. Quart., vol. 11, p. 227, 1898). For a chlorine map of Long Island, see G. C. Whipple and D. D. Jackson, Tech. Quart., vol. 13, p. 145, 1900. One of Connecticut appears in the report of the State Board of Health for 1895. For a general chlorine map of New York and New England, see Jackson, Water-Sup. and Irr. Paper No. 144, U. S. Geol. Survey, 1905.

Furthermore, we have the older researches of Pierre,[a] whose analyses were made in 1851 at Caen, in Normandy, where each hectare of soil was found to receive annually, in rain, the following impurities:

NaCl	37.5	Na_2SO_4	8.4
KCl	8.2	K_2SO_4	8.0
$MgCl_2$	2.5	$CaSO_4$	6.2
$CaCl_2$	1.8	$MgSO_4$	5.9

These citations are enough to show the great geological importance of rainfall, over and above its ordinary mechanical effects, and its value as a solvent after it enters the ground. The atmospheric circulation of salt has received much attention, and F. Pošepný,[b] as long ago as 1877, attempted to show that the sodium chloride of inland waters and saline lakes was derived largely from this source. Of late years the same idea has been strongly urged by W. Ackroyd,[c] who has gone so far as to attribute the salinity of the Dead Sea to chlorides brought by winds from the Mediterranean. Furthermore, A. Muntz[d] has pointed out that without this circulation of salt, and its replenishment of the land, the latter would soon be drained of its chlorides, and living beings would suffer from the loss. These writers probably overemphasize the importance of "cyclic salts," as they have been called, but their arguments are enough to show that the phenomena under consideration are by no means insignificant. Wind-borne salt plays a distinct part in the economy of nature; but its influence is yet to be studied in definite, quantitative terms.

Apart from its function in carrying soluble salts, the atmosphere performs a great work in mechanically transporting other solids. Its effectiveness as a carrier of dust is well understood: dust from the explosion of Krakatoa was borne twice around the globe, but such processes bear indirectly upon chemistry. In desert regions the sandstorms help to disintegrate the rocks, and so to render them more susceptible to chemical change. Dust, also, whether cosmic or terrestrial, furnishes the nuclei around which drops of rain are formed, and so reinforces the activity of atmospheric moisture.[e]

---

[a] See R. Angus Smith, Air and Rain, pp. 232–223, 1872. Pierre also cites valuable data obtained by Barral, Bineau, Liebig, Boussingault, and others. See also A. Bobierre, Compt. Rend., vol. 58, p. 755, 1864, for the composition of rain water collected at Nantes in 1863. The average sodium chloride amounted to 14.09 grams per cubic meter.

[b] Sitzungsb. Akad. Wien, vol. 76, abth. 1, p. 179, 1877. See also a discussion of this memoir by E. Tietze, Jahrb. K.-k. geol. Reichsanstalt, vol. 23, p. 341, 1877. In a recent discussion of this subject E. Dubois (Arch. Musée Teyler, 2 ser., vol. 10, p. 441, 1907) has estimated the amount of atmospheric salt annually precipitated in rainfall on two provinces of Holland as about 6,000,000 kilograms.

[c] Geol. Mag., 4th ser., vol. 8, p. 445, 1900. Proc. Yorkshire Geol. and Polytech. Soc., vol. 14, p. 408. Chem. News, January 8, 1904.

[d] Compt. Rend., vol. 112, p. 449, 1891.

[e] See J. Aitken, Proc. Roy. Soc. Edinburgh, vol. 17, p. 193, 1890. An interesting lecture by A. Ditte (Revue scient., 5th ser., vol. 2, p. 709, 1904), on metals in the atmosphere, is *well worthy of notice.* It deals with dust, meteoric matter, cyclic salts, ammonium compounds, etc.

THE PRIMITIVE ATMOSPHERE.

Although the main purpose of this memoir is to assemble and classify data, rather than to discuss speculations, a few words as to the origin of our atmosphere may not be out of place. Upon this subject much has been written, especially in recent years; but none of the widely variant theories so far advanced can be regarded as conclusive. The problem, indeed, is one of cosmology, and chemical data supply only a single line of attack. Physical, astronomical, mathematical, and geological evidence must be brought to bear upon the question, before anything like an intelligent conclusion can be reached. Even then, with every precaution taken, we can hardly be sure that our fundamental premises are sound.

One phase of the discussion, to which I have already referred, relates to the constancy or variability of the atmosphere. The accumulations of carbon in the lithosphere, such as the coal measures, the limestones, and the like, have led some geologists to assume that the atmosphere at some former time was vastly richer in carbonic acid than it is now; but the fossil records of life suggest that the differences could not have been extreme. With a large excess of carbon dioxide the existence of air-breathing animals would be impossible. Only anaerobic organisms could live. It is clear that the stored carbon of the sedimentary rocks was once largely in the atmosphere, but was it ever all present there at any one time?

The known carbon of the lithosphere, as shown by the statistics in the preceding chapter, if converted into carbon dioxide, would yield nearly 25 times the present mass of the entire atmosphere; and its pressure would be almost great enough to liquefy a part of it. Any assumption in favor of such an atmospheric accumulation is therefore improbable.[a]

In order to account for the observed phenomena, at least three essentially distinct hypotheses have been proposed. The volcanic theory has already been considered, and its advocates are numerous; but a simpler view perhaps is that of T. Sterry Hunt.[b] He argued in favor of a cosmical atmosphere, pervading all space, from which a steady supply of carbon dioxide has been drawn. This theory, which was also favored by Alexander Winchell,[c] postulates a universal, exhaustless reservoir of carbon, which should be able to satisfy all demands. But what evidence have we that such an atmosphere exists? S. Meunier,[d] criticising Hunt, points out that some

[a] For a curious speculation on the mass of the atmosphere, see R. H. McKee, Science, vol. 23, p. 271, 1906. He argues that the present atmosphere is as great as the earth is capable of retaining.

[b] Am. Jour. Sci., 3d ser., vol. 19, p. 349, 1880.

[c] Science, vol. 2, p. 820, 1883.

[d] Compt. Rend., vol. 87, p. 541, 1878.

planets have excessive and others deficient atmospheres, and that a cosmic uniformity is therefore improbable. Meunier prefers the volcanic theory, for which we have at least some basis of fact. We know that gases are emitted from volcanoes, even though there is no certain measure of their quantity, and the question to be determined relates to the adequacy and the source of the supply. That question I shall not now attempt to answer; but, obviously, if the volcanic hypothesis be true, the cessation of volcanism would signify the end of life on the globe. It would be followed by the consumption of all available carbon dioxide, so that plant life, and consequently animal life, could no longer be supported. A cosmical atmosphere has no assignable limit; an atmosphere of volcanic origin must sooner or later be exhausted. May not the moon be an example of such an atmospheric death?

A third theory relative to the atmosphere is based upon the belief that the unoxidized, but oxidizable, substances in the primitive rocks are sufficient in quantity to absorb all the oxygen of the air. If our globe solidified from a molten condition, and if, as commonly supposed, oxidized compounds were the first to form, the observed conditions are not easy to explain. C. J. Koene, indeed, assumed that the primitive atmosphere contained no free oxygen, and he has been followed of late years by T. L. Phipson,[a] J. Lemberg,[b] John Stevenson,[c] and Lord Kelvin.[d] Lemberg and Kelvin, however, do not go to extremes, but admit that possibly some free oxygen was present even in the earliest times. Lemberg argued that the primeval atmosphere contained chiefly hydrogen, nitrogen, volatile chlorides, and carbon compounds, the oxygen which is now free being then united with carbon and iron. The liberation of oxygen began with the appearance of low forms of plant life, possibly reached a maximum in Carboniferous time, and has since diminished. Stevenson's argument is much more elaborate, and starts with an estimate of the uncombined carbon now existent in the sedimentary formations. In the deposition of that carbon, oxygen was liberated, and from data of this kind it is argued that the atmospheric supply of oxygen is steadily increasing, while that of carbon dioxide diminishes. The facts that no oxygen has been recognized in solar or stellar spectra and that none is found in the gases extracted from rocks are also adduced in favor of the theory. First, an oxidized crust and no free oxygen in the air; then processes of reduction coming into play; and at last the appearance of lower forms of plants, which prepared the atmos-

[a] Chem. News, vol. 67, p. 135, 1893. Also several notes in vols. 68, 69, and 70. For Koene's work see Phipson's papers, 1893–94.

[b] Zeitschr. Deutsch. geol. Gesell., vol. 40, pp. 630–634, 1888.

[c] Phil. Mag., 5th ser., vol. 50, pp. 312, 399, 1900; 6th ser., vol. 4, p. 435, 1902; vol. 9, p. 88, 1905; vol. 11, p. 226, 1905.

[d] *Phil. Mag., 5th ser.*, vol. 47, pp. 85–89, 1899.

phere to sustain animal life. The arguments are ingenious, but to my mind they exemplify the result of attaching excessive importance to one set of phenomena alone. It is not clear that due account has been taken of the checks and balances which are actually observed. At present the known losses of oxygen seem to exceed the gains. For example, C. H. Smyth[a] has estimated that the oxygen withdrawn from the air by the change of ferrous to ferric compounds, and so locked up in the sedimentary rocks, is equal to 68.8 per cent of the quantity now present in the atmosphere.

But were oxidized compounds the first compounds to form? If they were, then the arguments just cited are valid, but the premises are doubtful. If the molten globe was as hot as has been supposed, it is likely that carbides, silicides, nitrides, etc., would be generated first, and in that case all the oxygen of the lithosphere would be atmospheric. This supposition is based upon the results obtained with the aid of the electric furnace at temperatures which decompose oxygen compounds in the presence of carbon, silicon, or nitrogen, substances of the class just named being then produced. Considerations of this kind have been elaborately developed by H. Lenicque,[b] who, however, pushes them to extremes. He even goes so far as to ascribe great masses of limestone to the atmospheric oxidation of primitive carbides. It will be observed at once that theories of this order are directly related to the hypotheses which postulate an inorganic origin for petroleum—a subject which will be more fully discussed in the proper chapter. For the present it is enough to see that cogent arguments may lead us to either of two opposite beliefs—that the primitive atmosphere was rich in oxygen, or that it was oxygen free.

The balance or lack of balance between carbon and oxygen is, after all, only one factor in the problem. The origin of the atmosphere as a whole is a much larger question, and our answers to it must depend upon our views as to the genesis of the solar system. If we accept the nebular hypothesis, we are likely to conclude that the atmosphere is merely a residuum of uncombined gases which were left behind when the globe assumed its solid form. That, I think, is the prevalent opinion, although it must be modified by the observed facts of volcanism. The outer envelope of the earth receives reinforcements from within, whose sources will be considered at length in another chapter.

Quite a different theory of the earth's origin has lately been developed by T. C. Chamberlin,[c] who imagines a planet built up by

[a] Jour. Geol., vol. 13, p. 319, 1905.

[b] Mém. Soc. ingén. civils France, October, 1903, p. 346.

[c] Jour. Geol., vol. 5, p. 653, 1897; vol. 6, pp. 459, 609, 1898; vol. 7, pp. 545, 667, 751, 1899. See also H. L. Fairchild, Am. Geologist, vol. 33, p. 94, 1904.

slow aggregations of small, solid bodies. Each of these particles, or meteorites, carried with it entangled or occluded atmospheric material. In time the accumulation of originally cold matter developed pressure enough to raise the central portions of the mass to a high temperature, and gases were then expelled. Thus the atmosphere was generated from within the globe instead of remaining as a residuum around it. We know that meteorites contain occluded gases, and that gases are also extractable from igneous rocks, and these facts lend to the hypothesis a certain plausibility. The gases thus obtainable from the lithosphere are equivalent to many potential atmospheres, although, as we have already seen, oxygen is not among them. On Chamberlin's hypothesis the atmosphere has grown from small beginnings; the nebular conception assumes that it was largest at first.

One curious speculation, which may be connected with the theory just described, relates to the nature of the earth's interior. From the known fact that the temperature rises as we descend into the crust of the earth, calculations have been made to show that the temperature of the centrosphere must be enormously high. In fact, if the rate of increase is constant, the temperature must reach a degree far above the critical point of any known element. Matter in the interior of the earth, then, should be gaseous or quasi gaseous. This suggestion was first offered by Herbert Spencer,[a] later by A. Ritter,[b] and has been more recently developed by S. Arrhenius.[c] It has, however, only speculative value, for it rests upon assumptions which can not be tested experimentally. If the conception be entertained, then the possibilities of speculation about additions to the atmosphere are greatly increased. A discussion of that sort falls without the scope of this memoir, and only these brief references are admissible here.

[a] See his essays on the nebular hypothesis (1858) and the constitution of the sun (1865). Cited from New York edition of 1892.

[b] Wied. Annalen, vol. 5, p. 405, 1878.

[c] Geol. Fören. Förhandl., vol. 22, p. 395, 1900.

CHAPTER III.

LAKES AND RIVERS.[a]

ORIGIN.

When rain falls upon the surface of the earth, bringing with it the impurities noted in the preceding chapter, part of it sinks deeply underground to reappear in springs. Another part runs off directly into streams, a part is retained as the ground water of soils and the hydration water of clays, and a portion returns by evaporation to the atmosphere. According to an estimate by Sir John Murray,[b] the total annual rainfall upon all the land of the globe amounts to 29,347.4 cubic miles, and of this quantity 6,524 cubic miles drain off through rivers to the sea. A cubic mile of river water weighs 4,205,650,000 tons, approximately, and carries in solution, on the average, 762,587 tons of foreign matter. In all, nearly 5,000,000,000 tons of solid substances are thus carried annually to the ocean. Suspended sediments, the mechanical load of streams, are not included in this estimate; only the dissolved matter is considered, and that represents the chemical work which the percolating waters have done.

Although the minerals which form the rocky crust of the earth are relatively insoluble, they are not absolutely so. The feldspars are especially susceptible to change through aqueous agencies, yielding up their lime or alkalies to percolating water and forming a residue of clay. Rain water, as we have already seen, contains carbonic acid in solution, and that impurity increases its solvent power, particularly with regard to limestones. The moment that water leaves the atmosphere and enters the porous earth its chemical and solvent activities begin, and continue, probably without interruption, until it reaches the sea. The character and extent of the work thus done varies with local conditions, such as temperature, the nature of the minerals encountered, and so on; but it is never zero. Sometimes larger and sometimes smaller, it varies from time to time and place to place. The entire process of weathering will be considered more fully later; we have now to study the nature of the dissolved matter alone, or, in other words, the composition of rivers and lakes. The data are abundant, but unfortunately complicated by a lack of uni-

[a] Excluding those belonging to closed basins.
[b] *Scottish Geog. Mag.*, vol. 3, p. 65, 1887.

formity in the methods of statement, which latter are often unsatisfactory and even misleading. The analysis of a water can be reported in several different ways, as in grains per gallon or parts per million; in oxides, in suppositious salts, or in radicles; so that two analyses of the same material may seem to be totally dissimilar, although in reality they agree. Before we can compare analyses one with another we must reduce them to a common standard, for then only do their true differences appear. The task of reduction may be tedious, but it is profitable in the end.

STATEMENT OF ANALYSES.

In the usual statement of water analyses an essentially vicious mode of procedure has become so firmly established that it is difficult to set aside. For example, a water is found to contain sodium, potassium, calcium, magnesium, chlorine, and the radicles of sulphuric and carbonic acids; or, in ordinary parlance, three acids and four bases. If these are combined into salts at least twelve such compounds must be assumed, and there is no definite law by which their relative proportions can be calculated. A combination, however, is commonly taken for granted, and each chemist allots the several acids to the several bases according to his individual judgment. The twelve possible salts rarely appear in the final statement; all the chlorine may be assigned to the sodium and all the sulphuric acid to the lime, and the result is a meaningless chaos of assumptions and uncertainties. We can not be sure that the chosen combinations are correct, and we know that in most analyses they are too few.

But are the radicles combined? This is a point at issue. Although no complete theory, covering all the phenomena of solution, has yet been developed, it is the prevalent opinion, at least among physical chemists, that in dilute solutions the salts are dissociated into their ions, and that with the latter only can we legitimately deal. Whether this theory of dissociation shall ultimately stand or fall is a question which need not concern us now; we can use it without danger of error as a basis for the statement of analyses, putting our results in terms of ions which may or may not be actually combined.[a] Upon this foundation all water analyses can be rationally compared, with no unjustifiable assumptions and with all the real data reduced to the simplest uniform terms. We do not, however, get rid of all difficulties, and some of these must be met by pure conventions. For example, Is silica present in colloidal form, or as the silicic ion SiO_4''? Are ferric oxide and alumina present as such, or in the ions of their salts? The iron may represent ferrous carbonate, the alumina may

[a] The ionic form of statement has been used in the Survey laboratory since 1883. In Europe it has had strong advocacy from Prof. C. von Than, Min. pet. Mitth., vol. 11, p. 487, 1890. It is now rapidly supplanting the older system.

be equivalent to alum; but as a rule the quantities found are so trivial that the true conditions can not be determined from the ratios between acidic and basic radicles. The unavoidable errors of analysis are commonly too large to permit a final settlement of these questions; and only in exceptional cases can definite conclusions be drawn. For convenience, then, we may regard these substances as colloidal oxides and tabulate them in that form. The procedure may not be rigorously exact, but the error in it is usually very small. If we consider an analysis as representing the composition of the anhydrous inorganic matter which is left when a water has been evaporated to dryness, the difficulty as regards iron disappears, for ferrous carbonate is then decomposed and ferric oxide remains. A similar difficulty in respect to the presence of bicarbonates also vanishes at the same time, for the bicarbonates of calcium and magnesium can only exist in solution and not in the anhydrous residues. If, in a given water, notable quantities of lime, magnesia, and carbonic acid are found, bicarbonic ions must be present, for without them the bases could not continue dissolved; but after evaporation only the normal salts remain. Sodium and potassium bicarbonates are not so readily broken down; but even with them it is better to compare the monocarbonates, so as to secure a uniformity of statement. In fact, some analysts report only normal salts, and others bicarbonates; so that for the comparison of different analyses we are compelled to adopt an adjustment such as that which is here proposed. In other words, we eliminate the variable factors, and study the constants alone.

One other large variable remains to be considered—the variation due to dilution. A given solution may be very dilute at one time, and much more concentrated at another, and yet the mineral content of the water is possibly the same in both cases. For example, average ocean water contains 3.5 per cent of saline matter, while that of the Black Sea carries little more than half as much; and yet the salts which the two waters yield upon evaporation are nearly if not quite identical. In some cases, as we shall presently see, it is desirable to compare waters directly; but in most instances it is also convenient to study the composition of the solid residues in percentage terms. In that way essential similarities are brought to light and the data become most intelligible.

Before proceeding farther, it may be well to consider a single water analysis, in order to illustrate the various methods of statement. For this purpose I will take W. P. Headden's analysis of water from Platte River near Greeley, Colorado,[a] which he himself states in several forms. In the first column of the subjoined table the results are given in oxides, etc., as in a mineral analysis, and in

[a] *Bull. No. 82*, Colorado Agric. Exper. Sta., p. 58, 1903.

grains to the imperial gallon. In the second column they are stated in terms of salts, and I have here recalculated Headden's figures into parts per million of the water taken. Finally, in a third column, I give, as proposed in the foregoing pages, the composition of the residue in radicles or ions, and in percentages of total anhydrous inorganic solids.

Analysis of water stated in different forms.

	Grains per imperial gallon.		Parts per million.		Per cent.
SiO_2	0.891	$CaSO_4$	457.7	SiO_2	1.26
SO_3	32.601	$MgSO_4$	236.0	SO_4	55.28
CO_2	4.554	K_2SO_4	9.4	CO_3	8.78
Cl	2.681	Na_2SO_4	62.5	Cl	3.79
Na_2O	11.463	NaCl	63.2	Na	12.02
K_2O	.355	Na_2CO_3	156.9	K	.41
CaO	13.117	Na_2SiO_3	21.9	Ca	13.24
MgO	5.530	$(FeAl)_2O_3$	2.7	Mg	4.69
$(FeAl)_2O_3$	.189	Mn_2O_3	2.7	R_2O_3	.53
Mn_2O_3	.189	Ignition	34.2		100.00
Ignition	2.397	Excess SiO_2	1.3	"Ignition" omitted.	
	73.967		1,048.5	Salinity, 1,014 parts per million.	
Less O=Cl	.604				
	73.363				

So far as appearance goes, these statements might represent three different waters; and yet the analytical data are the same. A change in the last column of SiO_2 into the radicle SiO_3 would affect the other figures but slightly. The compactness and simplicity of the ionic form of statement are evident at a glance. Under it, as "salinity," I have given the concentration of the water in terms of parts per million. One million parts of this water contain in solution 1,014 parts of anhydrous, inorganic, solid matter.

SPRINGS.

When water first emerges from the earth as a spring its mineral composition is dependent upon local conditons. Some spring waters are exceedingly dilute; others are heavily charged with saline impurities. To the subject of "mineral" springs, a separate chapter will be given, and only a few analyses of spring water, all taken from the records of the United States Geological Survey, need be given here. They represent the beginnings of streams, and are therefore significant in this connection. All these analyses are reduced to a uniform standard, in accordance with the rules laid down in the preceding pages.

Analyses of spring water.

A. Spring near Magnet Cove, Arkansas. Analysis by H. N. Stokes.
B. Spring 1 mile west of Santa Fe, New Mexico. Analysis by F. W. Clarke.
C. Spring near Mountain City, Tennessee. Analysis by T. M. Chatard.
D. Caledonia Spring, Caledonia, New York. Analysis by H. N. Stokes.
E. Spring 3 miles west of Lowesville, North Carolina. Analysis by F. W. Clarke.
F. Spring near Mount Mica, Paris, Maine. Analysis by F. W. Clarke.

	A.	B.	C.	D.	E.	F.
CO_3	53.59	47.14	27.29	11.73	12.15	6.22
SO_4	3.40	6.67	16.37	31.62	51.86	60.97
Cl	1.35	4.18	1.50	22.28	.45	trace
Ca	30.95	22.67	14.39	19.49	23.58	22.37
Mg	3.45	6.17	2.23	3.25	1.47	2.62
Na	1.08	5.32	5.72	10.62	4.16	4.32
K	.63		3.97	.34	.34	.21
SiO_2	5.55	7.85	27.17	.67	5.99	2.80
Al_2O_3	.....	.....	trace	.....	.....	.....
Fe_2O_3	.....	.....	1.36	.....	.....	.49
	100.00	100.00	100.00	100.00	100.00	100.00
Salinity, parts per million	224	280	80	925	642	606

Some of these waters yield carbonates on evaporation, one yields mainly sulphates, and between the two extremes the carbonic and sulphuric ions vary almost reciprocally. One water is characterized by its high proportion of chlorine, and another by its large percentage of silica; but in all of them calcium is the dominant metal. In salinity they differ somewhat widely, but the most concentrated example contains only 925 parts per million, or 52 grains to the United States gallon, of foreign solids. It will be seen as we go farther that carbonate waters are the most common, for the reason that rain water brings carbonic acid from the air, and that substance is most active as a solvent of mineral matter.

CHANGES OF COMPOSITION.

As spring water flows from its source it rapidly changes in character. It receives other water in the form of rain or of ground water flowing from the soil, and it blends with other rivulets to produce larger streams. Under certain conditions a part of its dissolved load may be precipitated, and the composition of a river as it approaches the sea represents the aggregate effect of all these agencies. A river is the average of all its tributaries, plus rain and ground water, and many rivers show also the effects of contamination from towns and factories. Small streams are the most affected by local conditions, and show the greatest differences in composition; large rivers, as a rule, resemble one another more nearly.

How rapidly and how profoundly the composition of a river may be modified are well illustrated in Headden's bulletin, which I have already cited.[a] Cache la Poudre River in Colorado flows first through a rocky canyon, over bowlders of schist and granite, and thence

[a] *Bull. No. 82, Colorado Agric. Exper. Sta., 1903.*

emerges upon the plains. Its waters are then diverted into ditches and reservoirs for purposes of irrigation, and finally reach the Platte near Greeley. In performing the work of irrigation they acquire a new load of solid matter, and the progressive changes in their composition are clearly shown by Headden's analyses. Some of the latter I will cite, first as Headden gives them in grains to the imperial gallon, and then in a second table reduced to ions and percentages.

Analysis E is the one cited on page 56 to show different forms of statement. In all cases I omit Headden's figures for "ignition," and deal with the anhydrous residues alone.

Analyses of water from Colorado rivers.

A. Cache la Poudre River, above the north fork.
B. Cache la Poudre River, water from faucet in laboratory at Fort Collins.
C. Cache la Poudre River, 2 miles above Greeley.
D. Cache la Poudre River, 3 miles below Greeley.
E. Platte River below mouth of the Cache la Poudre.

GRAINS PER IMPERIAL GALLON.

	A.	B.	C.	D.	E.
CO_2	0.6029	2.3731	5.920	5.087	4.554
SO_3	.1946	1.8699	54.970	30.374	32.601
Cl	.1037	.1055	2.770	2.145	2.681
CaO	.5238	3.0364	18.938	14.087	13.117
SrO	trace	.0223	.....	.....	.....
MgO	.1257	.8857	12.190	5.592	5.530
Na_2O	.3750	.6631	14.590	9.117	11.463
K_2O	.0855	.1921	.451	.372	.355
SiO_2	.6053	.6245	1.035	.951	.891
$(AlFe)_2O_3$	.0113	.0171	.079	.039	.189
Mn_2O_3	.0018	.0112	trace	.078	.189
	2.6296	9.8009	110.943	67.842	71.570
Less O=Cl	.0234	.0238	.624	.483	.604
	2.6062	9.7771	110.319	67.359	70.966

REDUCED ANALYSES, IN PERCENTAGES.

	A.	B.	C.	D.	E.
CO_3	31.91	33.68	7.34	10.34	8.78
SO_4	9.07	23.36	59.99	54.33	55.28
Cl	4.03	1.10	2.52	3.19	3.79
Ca	14.53	22.58	12.31	15.00	13.24
Sr	.....	.19	.....	.....	.....
Mg	2.93	5.53	6.65	5.00	4.69
Na	10.80	5.12	9.84	10.09	12.02
K	2.72	1.66	.34	.46	.41
SiO_2	23.50	6.49	.94	1.42	1.26
R_2O_3	.51	.29	.07	.17	.53
	100.00	100.00	100.00	100.00	100.00
Salinity, parts per million	37	137	1,571	958	1,011

We have here, first, a very pure mountain water, relatively high in carbonates and rich in silica. At the end of the series we have waters in which sulphates predominate and the proportion of silica is very low. The change is extremely great in all respects, and is due to the use of the water for irrigating an originally arid soil containing much soluble matter. Probably when the soil shall have been thoroughly leached by long periods of cultivation the changes in the water will be less exaggerated. A similar alteration is also

shown in Headden's analyses of water from Arkansas River, first at Canyon, where it emerges from the mountains, and second at Rockyford, nearly 100 miles below.[a] The analyses are as follows, reduced to the common standard adopted in this memoir. Headden regards the silica as present partly in the form of alkaline silicates, a supposition which is probably correct. For present purposes, however, the difference between SiO_2 and the SiO_3 radicle may be neglected.

Analyses of water from Arkansas River at two points in Colorado.

	Canyon.	Rockyford.
CO_3	37.55	2.65
SO_4	14.62	60.69
Cl	3.77	4.89
Ca	20.24	12.78
Mg	5.13	3.76
Na	9.57	14.50
K	.60	.28
SiO_2	8.19	.45
R_2O_3	.33	.....
	100.00	100.00
Salinity, parts per million	148	2,134

Changes of a different order are shown by the waters of the River Chélif, in Algeria, according to the investigation by L. Ville.[b] This stream flows through an arid region, in which incrustations or efflorescences of salt and gypsum abound. Lower in its course it receives affluents much poorer in mineral matter, and its character, at least as regards salinity, is modified. Ville's analyses reduced to a modern standard are as follows:

Analyses of water from River Chélif, Algeria.

A. Sample taken at Ksar-Boghari during extreme low water.
B. Sample taken at the same point a few days later, after a rise.
C. Sample from Orleansville, much farther downstream.

	A.	B.	C.
CO_3	0.93	1.11	9.81
SO_4	40.36	25.87	29.64
Cl	26.40	39.28	26.54
Ca	7.46	6.63	11.85
Mg	4.12	4.42	4.11
Na	20.64	22.61	17.03
SiO_2	.06	.04	.34
Fe_2O_3	.03	.04	1.18
	100.00	100.00	100.00
Salinity, parts per million	6,670	5,342	1,182

[a] Bull. No. 82, Colorado Agric. Exper. Sta., 1903. Headden also gives analyses of water from St. Vrain, Big Thompson, Boulder, and Clear creeks, and from many reservoirs, irrigating ditches, and wells. See also Am. Jour. Sci., 4th ser., vol. 16, p. 169, 1903.

[b] Bull. Soc. géol. France, 2d ser., vol. 14, p. 352, 1857. A later analysis by Balland is given in Jour. Chem. Soc., vol. 36, p. 699, abstract, 1879. Still another, by F. de Marigny, is cited by Roth. In Ann. mines, 5th ser., vol. 11, p. 667, 1857, Marigny gives analyses of two other Algerian rivers.

The effect of dilution by affluents is shown by analysis C; but the interesting feature of the series is the difference between high and low water at Ksar-Boghari. Ville attributes this difference to the fact that salt is much more soluble than gypsum and that therefore during a flood it is dissolved out more freely and more rapidly from the soil. At low water sulphates are in excess of chlorides; at high water the reverse is true.

The examples thus far cited serve to show the danger of attempting to draw general conclusions from a single analysis of a water, especially when the latter is collected at only one point. If we wish to determine the total load carried by a river to the ocean, the samples should be taken as near as possible to its mouth, but far enough upstream to avoid tidal contamination; and the analyses should be numerous enough to give a fair average result. Without such precautions no valid conclusions can be reached. The data must be adequate to the purpose in view—a condition which is not always fulfilled.

ANALYSES OF RIVER WATERS.

Many analyses of river and lake water are to be found scattered through chemical and geological literature. Only a part of the material can be considered here, and preference will be given, but not exclusively, to analyses not cited in the classical works of J. Roth and G. Bischof. Many of the analyses were made in the laboratories of the United States Geological Survey and especially in those of the water resources branch. All are here reduced to a uniform standard; but the original statements of quoted analyses can usually be found through the references to literature.

THE ST. LAWRENCE BASIN.

For geological purposes a regional classification of the data would seem to be the most practicable, for the members of a river system belong naturally together. Taking North American rivers first in order, let us begin with the St. Lawrence and its tributaries. The selected analyses are as follows:

Analyses of water from St. Lawrence River and the Great Lakes.

A. Lake Superior[a] at Sault Ste. Marie, Michigan. Average of five analyses of samples taken one month apart, in 1906 and 1907.

B. Lake Michigan at St. Ignace, Michigan.[b] Average of five monthly analyses, 1906–7.

C. Lake Huron at Port Huron, Michigan. Average of four monthly analyses, 1906.

D. Lake Erie at Buffalo, New York. Average of six monthly analyses, 1906–7.

---

[a] Other analyses of Lake Superior water have been made by W. A. Noyes, Eleventh Ann. Rept. Minnesota Geol. Survey, p. 174, 1882; by W. F. Jackman, cited by A. C. Lane in Water-Supply and Irrigation Paper No. 31, U. S. Geol. Survey, p. 27, 1899; and by G. L. Heath, Rept. State Board, Geol. Survey Michigan, 1903, p. 119.

[b] Analyses of Lake Michigan water at Milwaukee and of Milwaukee River, by G. Bode, are published in Geology of Wisconsin, vol. 1, p. 308, 1883. Another analysis of the lake water, by J. H. Long, is given in Report on the Boiler Waters of the Chicago, Burlington and Quincy Railroad, published by that company in 1888.

E. St. Lawrence River at Ogdensburg, New York. Average of six monthly analyses, 1906–7. Analyses A to E by R. B. Dole and M. G. Roberts, in the water-resources branch of the United States Geological Survey.

F. The St. Lawrence at Pointe des Cascades, near Vaudreuil, above Montreal. Analysis by T. Sterry Hunt, Phil. Mag., 4th ser., vol. 13, p. 239, 1857.

G. The St. Lawrence opposite Montreal. Analysis by Norman Tate, cited by T. Mellard Reade, in Evolution of Earth Structure, 1903.

	A.	B.	C.	D.	E.	F.	G.
CO_3	45.26	48.82	48.99	45.64	46.43	41.66	44.43
SO_4	4.33	5.67	5.64	9.48	9.64	5.19	11.17
Cl	1.69	2.01	2.19	5.40	4.10	1.51	2.41
NO_3	.56	.22	.30	.12	.19	.....	.....
Ca	25.78	23.42	23.11	23.79	24.28	20.08	20.67
Mg	4.96	6.94	6.35	5.51	5.46	4.52	6.44
Na	4.96	3.65	3.21	4.84	4.76	3.20	4.87
K						.72	.....
SiO_2	12.33	9.22	10.14	5.14	5.09	23.12	10.01
Fe_2O_3	.13	.05	.07	.08	.05	.....	.....
	100.00	100.00	100.00	100.00	100.00	100.00	100.00
Salinity, parts per million	58	116	105	134	132	160	148

The following analyses represent tributaries to the St. Lawrence.[a]

Analyses of water from tributaries to the St. Lawrence.

H. Pigeon River, Minnesota. Analysis by W. A. Noyes, Eleventh Ann. Rept. Minnesota Geol. Survey, 1882, p. 174.

I. Maumee River near Toledo, Ohio. Analysis by C. F. Chandler, Ninth Ann. Rept. Waterworks Board, Toledo, 1881.

J. Genesee River at Rochester, New York. Analysis by C. F. Chandler, quoted by I. C. Russell in Mon. U. S. Geol. Survey, vol. 11, opp. p. 176, 1885.

K. Ottawa River at St. Anne, near the head of Montreal Island. Analysis by T. S. Hunt, quoted by Russell, loc. cit.

L. Lake Champlain. Average of five analyses of samples taken in the broad lake, by M. O. Leighton, Water-Sup. and Irr. Paper No. 121, U. S. Geol. Survey, 1905. This paper also contains analyses of water from the upper end of the lake, of Bouquet River, and of Ticonderoga Creek.

	H.	I.	J.	K.	L.
CO_3	42.00	42.39	37.94	36.25	45.81
SO_4	4.69	13.38	25.29	3.19	11.03
Cl	6.09	2.39	1.41	1.24	1.78
Ca	18.08	25.26	24.48	16.22	21.19
Mg	5.74	4.23	5.29	3.25	4.21
Na	5.13	1.54	2.59	3.91	8.80
K	2.55	2.95	1.35	2.25	
SiO_2	14.15	6.91	.82	33.69	5.58
Fe_2O_3	1.57	.95	.83	.....	1.60
Al_2O_3		.....		.....	
	100.00	100.00	100.00	100.00	100.00
Salinity, parts per million	51	105	170	61	67

Between these waters there is a distinct resemblance, in that carbonates are the predominating salts and calcium is the chief metal. Ottawa River is characterized by high silica; but the Genesee and the

[a] Other tributaries that have been analyzed are as follows: Goose Lake, Michigan (Geol. Survey Michigan, vol. 8, pt. 3, p. 235, 1903); Torch Lake, Portage Lake, Pine River, Thunder River (Rept. State Board, Geol. Survey Michigan, 1903); Traverse Bay, Detroit, Shiawassee, Grand, Cass, Chippewa, Tittabawassee, and Boardman rivers, Manistee and Muskegon lakes (Water-Sup. and Irr. Paper No. 31, U. S. Geol. Survey, 1903).

Maumee, which flow through areas of sedimentary rocks, contain a larger proportion of sulphates. The increase in salinity or concentration in passing from Pigeon River, at the head of Lake Superior, to the St. Lawrence at Montreal is also noteworthy. The two Montreal analyses, F and G, are, however, far from concordant and can not be given much weight.

According to estimates made by engineers of the United States Army, the flow of the St. Lawrence past Ogdensburg is 248,518 cubic feet per second. This, with a salinity of 132 parts per million, corresponds to a transport of dissolved matter of 29,278,000 metric tons annually. The area drained, exclusive of water surface, is 286,900 square miles, and from each square mile 102 tons is removed in solution each year.

THE ATLANTIC SLOPE.

For the rivers and lakes of the Atlantic slope south of the St. Lawrence the data are rather scanty. The subjoined analyses are the most useful. In all of them bicarbonates are reduced to normal form, and organic matter is omitted from the calculation.

Analyses of waters from Atlantic slope—I.

A. Moosehead Lake, Maine.

B. Rangeley Lake, Maine.

C. Androscoggin River at Brunswick, Maine, above the falls. Average of thirty-eight analyses of weekly samples, taken between April 25, 1905, and January 16, 1906. Analyses A, B, and C made by F. C. Robinson, for the water-resources branch of the United States Geological Survey.

D. Merrimac River above Concord, New Hampshire. Analysis by H. E. Barnard for M. O. Leighton.

E. Hudson River at Albany, New York. Analysis by C. F. Chandler, Rept. Am. Public Health Assoc., vol. 1, pp. 533–563.

F. Hudson River at Hudson, New York. Thirteen samples, each representing a composite of ten daily collections, taken between September 17, 1906, and January 27, 1907. Average analysis by R. B. Dole and M. G. Roberts, in the laboratory of the water-resources branch, United States Geological Survey.

G. Mohawk River at Utica, New York. Analysis by C. F. Chandler, quoted by I. C. Russell in Mon. U. S. Geol. Survey, vol. 11, opp. p. 176, 1885.

H. Croton River, 1872. Analysis by C. F. Chandler, Rept. Am. Pub. Health Assoc., vol. 1, pp. 533–563. Another analysis of water taken in 1869 appears in the same report.

	A.	B.	C.	D.	E.	F.	G.	H.
CO_3	26.83	26.53	.....	28.15	38.98	35.43	44.10	46.71
SO_4	14.46	13.08	30.12	12.78	13.52	16.53	14.48	4.83
Cl	13.83	12.72	6.16	8.78	6.24	3.34	1.78	5.69
NO_3	.....	.....	.....	.....	.....	.96	.....	.....
Ca	14.94	14.78	19.61	17.14	24.23	20.35	24.64	19.26
Mg	1.80	1.69	3.08	4.18	4.99	3.82	5.34	7.26
Na	12.79	11.63	6.65	6.16	2.61	7.91	2.79	3.96
K	4.29	4.42	2.59	trace	.63		.69	3.02
SiO_2	9.68	13.33	23.53	18.14	7.51	11.47	5.18	7.34
Al_2O_3	1.38	1.82	8.26	1.34	1.29	.....	1.00	1.93
Fe_2O_3				3.33		.19		
	100.00	100.00	100.00	100.00	100.00	100.00	100.00	100.00
Salinity, parts per million	14.5	16.5	41	170	93	112	129	52

Analyses A and B are remarkable because of their relatively high content in alkaline chlorides. These waters, however, are very dilute, and the absolute quantity of chlorides in them is probably no more than they would receive from rainfall. The Androscoggin rises in the Rangeley Lakes, and yet in its analyses no carbonates were reported. Its salinity is low, and it may be that the waste from factories and pulp mills along its banks have converted all of its original carbonates into sulphates. Its basic radicles are largely in excess of the acid radicles SO_4+Cl, and it is therefore probable that equilibrium is maintained by the silica, which, if recalculated into the radicle SiO_3, is more than sufficient to restore the balance. As stated, the analysis is questionable. The Mohawk and Croton are tributaries of the Hudson.

Analyses of waters from Atlantic slope—II.

I. Delaware River near Trenton, New Jersey.[a] Analysis by H. Wurtz, Am. Jour. Sci., 2d ser., vol. 22, p. 125, 1856.

J. The Delaware at Lambertville, New Jersey. Average of fourteen analyses by Dole and Roberts, each sample a composite of ten daily collections between September 8, 1906, and February 9, 1907.

K. Susquehanna River at Danville, Pennsylvania. Average of twenty composites analyzed by Dole and Roberts, the samples having been taken between September 10, 1906, and April 3, 1907.

L. Potomac River above Great Falls, Maryland. Average of twelve samples taken at intervals of one month, between April, 1904, and April, 1905. Analyses by Raymond Outwater, Water-Sup. and Irr. Paper No. 192, U. S. Geol. Survey, pp. 296–297, 1907. This report contains thirty-four other analyses of water from the upper Potomac and its important tributaries.

M. James River, Virginia.[b] Richmond water supply. Analysis by W. H. Taylor, Rept. to Richmond Board of Health, 1877.

N. James River at Richmond, Virginia. Average of sixteen analyses by Dole and Roberts, each sample formed from ten daily collections between September 10, 1906, and February 18, 1907.

O. Cahaba River near Leeds, Alabama. Analysis by R. S. Hodges. Geol. Survey Alabama, Underground water resources, 1907. This report contains many analyses of springs and wells.

	I.	J.	K.	L.	M.	N.	O.
CO_3	44.70	30.66	25.18	44.37	42.52	36.08	41.91
SO_4	3.93	17.81	26.82	7.68	5.26	7.36	.90
Cl	2.12	3.49	5.00	4.44	1.51	2.00	1.85
NO_3	.....	1.66	2.90	.....	3.32	.48	.....
PO_4	2.61	.....	.....	.....	trace	.....	.....
Ca	18.89	17.80	17.63	27.40	18.49	17.68	21.33
Mg	7.63	4.96	4.50	4.08	5.44	4.00	4.22
Na	1.26	7.41	8.33	2.83	3.52	5.12	2.00
K	3.12			.55	3.58		1.89
SiO_2	14.92	16.01	9.54	4.56	14.74	26.32	24.22
Al_2O_3	.82	.....	.....	4.09	.58	.....	1.68
Fe_2O_3		.20	.10		.96	.96	
Mn_2O_3	.....	.....	.....	.....	.08	.....	.....
	100.00	100.00	100.00	100.00	100.00	100.00	100.00
Salinity, parts per million	57	65	106	115	69	86	[c]190

[a] Analyses of several New Jersey streams are given by A. H. Chester in the Report on water supply, New Jersey Geol. Survey, 1894. An analysis of water from Passaic River, by E. N. Horsford, is published in Geology of New Jersey, p. 703, 1868; and another by H. Wurtz in Am. Chemist, vol. 4, pp. 99, 133, 1873.

[b] A thesis by A. F. White, Washington and Lee University, 1906, contains partial analyses of tributaries of the James near Lexington, Virginia.

[c] With carbonates normal. In the original, with bicarbonates, the salinity is given as 272.8 parts per million.

Among these analyses that of the Susquehanna is noticeable on account of the high proportion of sulphates shown. This peculiarity may be abnormal and due to contamination by drainage water from the coal mines above Danville. The Potomac water strikingly resembles that of the St. Lawrence and the Great Lakes. According to estimates made by Outwater, the Potomac annually carries past Point of Rocks 771,000,000 kilograms of dissolved matter and 212,000,000 kilograms of solids in suspension, or sediments. The sum of the two quantities is 983,000 metric tons, or a little over 102 metric tons per square mile of the territory drained. The dissolved matter corresponds to 80 tons per square mile.

THE MISSISSIPPI BASIN.

For the great river system of the Mississippi the chemical data are abundant, but of very unequal value. The river itself has been studied from near its source to near its mouth, and the waters of many tributaries have also been analyzed. Taking the Mississippi itself first, the useful data are as follows, arranged in order going southward:[a]

Analyses of water from Mississippi River.

A. Mississippi River at Brainerd, Minnesota. Analysis by C. F. Sidener, Thirteenth Ann. Rept. Geol. Nat. Hist. Survey Minnesota, p. 102, 1884.

B. Mississippi River above Minneapolis.

C. Mississippi River below Minneapolis. Analyses B and C by J. A. Dodge, Tenth Ann. Rept. Geol. Nat. Hist. Survey Minnesota, p. 207, 1882. In recalculating these two analyses small amounts of organic matter were rejected.

D. Mississippi River at Minneapolis.[b] Average of twenty-three analyses, by W. M. Barr, H. S. Spaulding, and W. Van Winkle, of samples each formed by ten daily collections between September, 1906, and May, 1907.

E. Mississippi River at Memphis, Tennessee.[b] Average of seventeen ten-day composites, formed between October 29, 1906, and May 10, 1907. J. R. Evans, analyst.

F. Mississippi River above Carrollton, Louisiana. Analysis by C. H. Stone, Science, vol. 22, p. 472, 1905. Sample taken 6 feet below surface. Recalculated from bicarbonates.

G. Mississippi River above New Orleans.[b] Average of fifty-two weekly composites of samples taken daily between April, 1905, and April, 1906. Analyses by J. L. Porter, The average composition of the water for an entire year.

---

[a] Bailey Willis (Jour. Geol., vol. 1, p. 509, 1893) cites some imperfect analyses of the Mississippi and Missouri near St. Louis. Iowa Geol. Survey, vol. 6, p. 365, 1896, contains other analyses of Mississippi water, and also of Missouri, Cedar, Des Moines, Coon, Boyer, Wapsipinicon, Skunk, Chariton, Grand, Nodaway, and West Nishnabotna rivers. These too are incomplete. The early analyses of Mississippi water by Avequin and by Jones are of no value for present purposes. Partial analyses, containing some useful data, are given in Report of the sewage and water board, New Orleans, 1903. These relate to the lower Mississippi near New Orleans.

[b] Analyses D, E, and G were made for the water-resources branch of the United States Geological Survey. I am indebted to Messrs. M. O. Leighton and R. B. Dole for the privilege of using them.

	A.	B.	C.	D.	E.	F.	G.
CO_3	51.65	55.62	52.76	47.04	32.02	30.27	34.74
SO_4	1.05	1.80	2.04	9.61	11.31	19.69	14.90
Cl	.48	.91	1.08	.85	5.72	11.05	6.23
NO_3	.....	trace	trace	.85	.10	.....	1.57
PO_4	.....	.....	.....	.....	.....	.27	.....
Ca	22.94	23.38	23.90	20.59	17.45	20.25	20.42
Mg	4.09	8.24	6.75	7.67	6.98	4.66	5.21
Na	5.14	1.77	1.81	5.33	6.19	6.86	4.92
K	1.75	.76	1.28			1.57	4.65
SiO_2	9.40	7.16	9.46	8.01	19.45	5.07	6.77
Al_2O_3	2.01	.....	.....	.....	.....	.12	.44
Fe_2O_3	1.49	.36	.92	.05	.78	.08	.15
Mn_3O_4	.....	.....	.....	.....	.....	.11	.....
	100.00	100.00	100.00	100.00	100.00	100.00	100.00
Salinity, parts per million	195	188	177	200	197	146	166

In the foregoing table some of the figures appear to be questionable. The excessive chlorine in F, the silica in E, and the potassium in G are doubtful. In the ordinary or usual statement of water analyses variations like these from the normal are not easily recognized and may escape notice, but as percentages of total solids they distinctly appear. However, the table tells a definite story. The upper Mississippi is low in chlorides and sulphates, which tend to accumulate in the lower stream. The chlorides come in part from human contamination, a subject to be considered later; and at New Orleans there is probably some "cyclic sodium" brought in rainfall from the Gulf of Mexico. As a whole, the Mississippi water is mainly a calcium carbonate water, with all else subordinate. If we accept the figures given by J. L. Greenleaf,[a] who puts the average outflow of the river at 664,000 cubic feet per second, the mean salinity of 166 parts per million corresponds to a total transport of material in solution of 98,369,000 metric tons annually. This is equivalent to a little over 78 metric tons from each square mile of territory drained. It is the contribution of the entire Mississippi Valley to the salinity of the ocean, but it is subject to some corrections that need to be determined hereafter.

The next table gives analyses of waters tributary to the upper Mississippi within the State of Minnesota.[b]

Analyses of waters tributary to upper Mississippi River.

A. Lake Minnetonka. Analysis by W. A. Noyes, Geology of Minnesota, vol. 2, p. 311, 1888.

B. Millelacs Lake. Analysis by J. A. Dodge, Geology of Minnesota, vol. 4, p. 38, 1899.

C. Bigstone Lake. Analysis by C. F. Sidener, Thirteenth Ann. Rept. Geol. Nat. Hist. Survey Minnesota, p. 98, 1884. Empties into Minnesota River.

D. Heron Lake. Analysis by Noyes, Eleventh Ann. Rept. Geol. Nat. Hist. Survey Minnesota, p. 173, 1882. Empties into Des Moines River.

E. Rock River at Luverne. A tributary of Sioux River. Analysis by Noyes, Geology of Minnesota, vol. 1, p. 550, 1884.

[a] Am. Jour. Sci., 4th ser., vol. 2, p. 29, 1896. Greenleaf gives detailed data for the important tributaries of the Mississippi. The area drained by the river is put at 1,259,000 square miles.

[b] For analyses of several other Minnesota waters, see Water-Sup. and Irr. Paper No. 193, U. S. Geol. Survey, p. 133, 1907.

	A.	B.	C.	D.	E.
CO_3	58.81	59.03	20.13	42.65	47.94
SO_4	.....	.88	34.36	18.62	8.64
Cl	.72	.59	1.65	1.14	.44
NO_3	.....	.....	.....	1.39	.....
Ca	25.52	15.25	8.00	20.71	20.51
Mg	7.23	10.71	8.61	8.00	7.43
Na	1.03	6.68	6.69	2.94	3.31
K	2.32	2.24	1.01	1.32	.51
SiO_2	4.37	2.97	19.26	2.61	7.65
Fe_2O_3	.....	1.65	.29	.62	3.21
Al_2O_3	.....	.....	.....		.36
	100.00	100.00	100.00	100.00	100.00
Salinity, parts per million	110	144	554	272	275

In the following table I give analyses of waters which reach the Mississippi from the eastward by way of the Ohio. For the Ohio itself I have found no satisfactory data.

Analyses of waters tributary to Ohio River.

A. Monongahela River at Fairmont, West Virginia. Analysis by C. D. Howard, Bull. No. 89, West Virginia Agric. Exper. Sta. This bulletin also contains analyses of water taken at Morgantown, but showing contamination.

B. Wabash River at Vincennes, Indiana. Average of nineteen composites, made up of ten daily samples in each, taken between September 9, 1906, and May 8, 1907. Analyses by W. M. Barr, H. S. Spaulding, and W. Van Winkle.

C. Kentucky River at Frankfort, Kentucky. Average of sixteen composites, as in B, taken between September 28, 1906, and February 11, 1907. Analyses by R. B. Dole and M. G. Roberts. Analyses B and C represent work done under the water-resources branch of the United States Geological Survey.

D. Cumberland River at Nashville, Tennessee. Analysis by N. T. Lupton, quoted by I. C. Russell in Mon. U. S. Geol. Survey, vol. 11, opp. p. 176, 1885.

	A.	B.	C.	D.
CO_3	17.47	31.27	39.06	47.25
SO_4	35.35	17.12	7.32	4.65
Cl	4.10	12.81	1.42	2.47
NO_3	.....	2.12	3.55	4.21
Ca	16.90	17.31	22.62	24.65
Mg	4.37	6.29	4.06	2.31
Na	5.22	8.87	5.71	8.51
K	.....			.41
SiO_2	14.63	4.04	15.32	.....
Al_2O_3	1.96	.....	.....	5.54
Fe_2O_3		.17	.94	
	100.00	100.00	100.00	100.00
Salinity, parts per million	78	341	115	121

For the largest tributary of the Mississippi—the Missouri—several analyses are available.[a] They are given in the following table, together with analyses of other affluent waters.

Analyses of water from Missouri River and tributaries.

A. Missouri River at Great Falls, Montana. Analysis by Edgar and Mariner, cited in Eighteenth Ann. Rept. U. S. Geol. Survey, pt. 4, p. 612, 1897.

B. Missouri River at Bismarck, North Dakota. Analysis by C. F. Sidener for the Northern Pacific Railway. Received through M. O. Leighton.

[a] *Another analysis of* Missouri River water, by F. W. Traphagen, is cited in E. W. *Hilgard's "Soils," p. 23,* but the point of collection is not named.

C. Missouri River at Florence, Nebraska, near Omaha. Average of twenty composites, each of ten daily samples, analyzed by W. M. Barr and W. Van Winkle for the water-resources branch of the United States Geological Survey. Samples taken between October, 1906, and April, 1907.

D. Missouri River at Ruegg, Missouri, near its mouth. Average of twenty-one composites, like C, analyzed by W. M. Barr, H. S. Spaulding, and W. Van Winkle. Samples taken between September, 1906, and May, 1907.

E. Laramie River 20 miles above Laramie, Wyoming. Average of three analyses by E. E. Slosson, Bull. No. 24, Wyoming Exper. Sta., 1895.

F. Laramie River 50 miles below Laramie. Analysis by E. E. Slosson, loc. cit.[a]

G. Platte River at Fremont, Nebraska.[b] Average of sixteen composites like C and D. Analyses by W. M. Barr and W. Van Winkle for the water-resources branch, United States Geological Survey.

H. Yellowstone Lake. Analysis by J. E. Whitfield, Bull. U. S. Geol. Survey No. 47, 1888.[c]

	A.	B.	C.	D.	E.	F.	G.	H.
CO_3	27.10	27.78	22.63	25.94	27.35	19.59	28.22	20.93
SO_4	25.45	34.56	38.23	29.15	11.16	37.48	24.73	7.12
Cl	7.62	3.44	1.96	3.67	3.11	6.32	2.21	7.96
NO_3	.....	.....	.30	.80	.....	.....	.22	.....
Ca	8.93	17.96	14.72	15.21	13.75	15.07	16.18	7.29
Mg	5.48	5.72	4.87	4.89	2.45	5.10	4.36	.25
Na	17.13	8.49	10.42	10.16	7.34	8.82	10.20	13.22
K					.85	1.96		3.99
NH_4	.....	.....	.....	.....	.....	.....	.....	.34
SiO_2	8.29	2.05	6.70	9.83	31.73	4.54	13.77	35.51
Al_2O_3	.....		.....	.....	2.26	1.12	.....	3.39
Fe_2O_3	.....		.17	.35			.11	.....
	100.00	100.00	100.00	100.00	100.00	100.00	100.00	100.00
Salinity, parts per million	113	440	499	365	212	429	335	118

[a] Slosson also gives analyses of Popo Agie and Little Goose creeks. Another analysis of the Laramie is printed in Fifth Rept. Bureau of Soils, U. S. Dept. Agric., 1903.
[b] An analysis of the Platte at Greeley, Colorado, is given on p. 58, *ante*, together with some of Cache la Poudre River.
[c] This bulletin also contains analyses of water from Firehole and Gardiner rivers.

In all but two of these waters sulphates predominate over carbonates, and calcium is less conspicuous than in the analyses preceding this group. The high silica of the Yellowstone Lake is also noticeable.

For one other tributary of the Missouri a particularly interesting group of analyses is at hand. The Kansas or Kaw River, with its chief affluents, has been carefully studied by E. H. S. Bailey and E. C. Franklin,[a] whose data, reduced as usual, are given below. It should be observed, however, that the analyses are not quite complete; the sodium was calculated and the potassium not considered at all. The localities mentioned are all in the State of Kansas, and the arrangement of the streams is from the west, eastward.

Analyses of water from Kansas River and tributaries.

A. Smoky Hill River below Salina.
B. Saline River above New Cambria.
C. Solomon River above Solomon.
D. Republican River above Junction City.
E. Blue River.

[a] Kansas Univ. Quart., vol. 3, p. 91, 1894.

F. Delaware River[a] at Perryville. Analysis by J. E. Curry.

G. Wakarusa River south of Lawrence. Analysis by J. E. Curry.

H. Kansas River, average of two analyses, one sample taken above Topeka, the other above Lawrence. The two are fairly concordant.

	A.	B.	C.	D.	E.	F.	G.	H.
CO_3	16.07	13.70	14.12	31.41	35.41	44.54	42.66	23.83
SO_4	24.52	16.94	23.36	13.71	16.17	11.28	7.59	18.15
Cl	22.41	34.61	24.55	10.02	6.48	6.03	6.69	18.80
Ca	13.86	5.62	11.58	15.62	18.90	23.14	23.27	14.76
Mg	2.62	1.88	2.16	3.19	4.91	5.49	3.12	3.51
Na	17.81	26.07	20.15	13.06	7.89	4.76	12.81	15.45
SiO_2	2.03	.98	3.63	11.61	8.59	3.39	2.77	4.83
$(AlFe)_2O_3$	.68	.20	.45	1.38	1.65	1.37	1.09	.67
	100.00	100.00	100.00	100.00	100.00	100.00	100.00	100.00
Salinity, parts per million	1,017	2,323	1,105	554	436	396	499	766

[a] Not to be confused with the eastern river of the same name.

The four westernmost of these streams flow from a relatively arid region and are characterized by high salinity. They are peculiarly poor in carbonates but rich in sodium and chlorine, conditions which may be correlated with the great abundance of salt in Kansas. In the Blue River carbonates begin to predominate; and in the easternmost rivers of the group, the Delaware and the Wakarusa, there is a close approximation in chemical character to the streams of the Atlantic slope. The Kansas River itself represents a blending of all the waters which flow into it.

Two analyses of water from the Arkansas River, by Headden, have already been cited, but it seems well to reproduce them here, with others of the same important stream and also of the Red River, as follows:[a]

Analyses of water from Arkansas River and tributaries.

A. Arkansas River at Canyon, Colorado.

B. Arkansas River at Rockyford, Colorado. Analyses A and B by W. P. Headden, Bull. No. 82, Colorado Agric. Exper. Sta., 1903.

C. Arkansas River at Little Rock, Arkansas. High water, December 20, 1888.

D. Arkansas River at Little Rock. Low water, August 22, 1888. Analyses C and D by R. N. Brackett, Ann. Rept. Arkansas Geol. Survey, 1891, vol. 2, pp. 159, 160. Recalculated here to standard form. According to J. C. Branner (idem, p. 164), the river carries in solution past Little Rock 6,828,350 tons annually.

E. Arkansas River at Little Rock. Average of 13 composites of ten daily samples each, taken between November, 1906, and May, 1907. Analyzed by W. M. Barr, H. S. Spaulding, and W. Van Winkle, for the water-resources branch of the United States Geological Survey.

F. Neosho River at Chanute, Kansas. A tributary of the Arkansas. Analysis by C. F. Gustavsen, Kansas Univ. Sci. Bull., vol. 2, p. 243, 1903. Reduced from bicarbonate form.

G. Red River at Shreveport, Louisiana. Average of 6 ten-day composites, analyzed for the water-resources branch of the United States Geological Survey by J. R. Evans. Samples taken between January 31 and May 8, 1907.

[a] Partial analyses of about 50 streams in Oklahoma may be found in Water-Sup. and Irr. Paper No. 148, U. S. Geol. Survey, 1905.

	A.	B.	C.	D.	E.	F.	G.
CO_3	37.55	2.65	20.92	10.80	11.94	21.74	17.29
SO_4	14.62	60.69	8.15	12.61	13.54	16.08	24.44
Cl	3.77	4.89	22.21	38.55	33.78	2.78	14.58
NO_3	.....	.....	.....	.....	.36	.....	.04
Ca	20.24	12.78	7.20	7.60	8.91	15.76	13.94
Mg	5.13	3.76	1.75	1.67	2.26	.10	5.72
Na	9.57	14.50	19.83	25.92	22.95	7.91	12.05
K	.60	.28	3.68	.74		.....	
SiO_2	8.19	.45	12.00	1.81	5.85	26.02	10.55
Al_2O_3	.33	.....	.61	.24	.....	9.61	.....
Fe_2O_3		.....	3.65	.06	.41		1.39
	100.00	100.00	100.00	100.00	100.00	100.00	100.00
Salinity, parts per million	148	2,134	109	794	559	306	318

SOUTHWESTERN RIVERS.

A few of the rivers of southwestern United States have been studied with much care. The subjoined analyses represent this group.

Analyses of water from southwestern rivers.

A. Brazos River at Waco, Texas. Average of 14 composites of ten daily samples each, taken between December, 1906, and May, 1907. Analyses by W. M. Barr, H. S. Spaulding, and W. Van Winkle, for the water-resources branch of the United States Geological Survey.

B. Rio Grande at Mesilla, New Mexico.[a] Average composition for an entire year, June, 1893, to June, 1894. Analyses by Arthur Goss, Bull. No. 34, 1900, New Mexico Agric. Exper. Sta. This bulletin also contains analyses of water from Animas River, Santa Fe River, and Rio Bonito.

C. Pecos River, New Mexico. Average of six samples analyzed by Goss, loc. cit.

D. Colorado River at Yuma, Arizona. Average of seven composite samples, covering collections made between January 10, 1900, and January 24, 1901. Analyzed by R. H. Forbes and W. W. Skinner, Bull. No. 44, Univ. Arizona Agric. Exper. Sta., 1902. The average composition of the water during a year.

E. Gila River at head of Florence canal, below The Buttes, Arizona. Average of four analyses, by Forbes and Skinner, representing twenty-one weekly composites. Samples taken between November 28, 1899, and November 5, 1900.

F. Salt River at Mesa, Arizona. Average of six analyses covering forty weekly composites, of water taken between August 1, 1899, and August 4, 1900. Analyses by Forbes and Skinner, loc. cit. Salt River and the Gila are tributaries of the Colorado. Forbes and Skinner report their silica as the silicate radicle SiO_3. This is reduced to SiO_2 in the table.

	A.	B.	C.	D.	E.	F.
CO_3	8.83	17.28	1.54	13.02	12.10	9.61
SO_4	20.74	31.33	43.73	28.61	16.07	8.29
Cl	33.71	13.55	22.56	19.92	29.78	41.56
NO_3	.15	.....	.....	.....	.....	.....
Ca	9.54	14.78	13.43	10.35	8.03	7.15
Mg	2.04	2.05	3.62	3.14	2.52	2.69
Na	23.27	14.43	14.02	19.75	24.53	26.38
K		1.95	.77	2.17	2.31	1.38
SiO_2	1.69			3.04	4.66	2.94
Al_2O_3	.....	4.63	.38	.....	.....	.....
Fe_2O_3	.03			.....	.....	.....
	100.00	100.00	100.00	100.00	100.00	100.00
Salinity, parts per million	1,066	399	2,834	702	1,023	1,234

[a] An analysis of Rio Grande water by O. Loew is given in Rept. U. S. Geog. Surv. W. 100th Mer., vol. 3, p. 576, 1875. In the annual report of the same survey for 1876 Loew gives an analysis of water from Virgin River, a tributary of the Colorado.

These waters are characterized, as is evident on inspection of the table, by high salinity, the predominance of alkaline sulphates and chlorides, and a deficiency of carbonates and of lime. From figures given by Forbes I have computed that the Colorado carries to the

Gulf of California annually, in solution, 13,416,400 metric tons of salts, or about 59.6 metric tons from each square mile of its basin.

THE PACIFIC SLOPE.

The next table contains analyses of waters tributary to the Pacific Ocean.

Analyses of waters tributary to Pacific Ocean.

A. Yukon River at Eagle, Alaska. Analysis by G. Steiger. Reported by F. W. Clarke, Jour. Am. Chem. Soc., vol. 27, p. 111, 1905.

B. Cedar River, Washington. Analysis by H. G. Knight, Rept. Washington Geol. Survey, vol. 1, p. 285, 1901.

C. Snake River, Blackfoot area, Idaho.

D. Powder River near Baker City, Oregon. Analyses C and D made under the direction of F. K. Cameron, Fifth Rept. Bureau of Soils, U. S. Dept. Agric., 1903. An analysis of Powder River at a different point is also given in this report.

E. Lost River, Klamath County, Oregon. Analyses by A. L. Knisely, Ann. Rept. Irr. and Drainage Investigations, U. S. Dept. Agric., 1904, p. 264.

F. Clear Lake, 75 miles north of San Francisco, California. Analysis by T. Price, cited in Water-Sup. and Irr. Paper No. 45, U. S. Geol. Survey, p. 33, 1901.

G. Feather River at Gridley, California. Analysis reported by E. W. Hilgard, Rept. Agric. Exper. Sta., Univ. of California, for 1898–1901.

H. Sacramento River at Sacramento, California. Average of twenty composites, of ten daily samples each, taken between January 11 and August 10, 1906. Analyses by F. W. Evans and P. L. McCreary, for the water-resources branch of the United States Geological Survey. Potassium determinations omitted in a few of the later analyses.

I. San Lorenzo River, California. Analysis by A. Seidell, Field Operations Bureau of Soils, U. S. Dept. Agric., 1901.

J. Santa Clara River near Santa Paula, California. Analysis by B. E. Brown, same reference as I. An analysis of Sespe Creek is also given.

K. Mission Creek.

L. Cold Spring Creek.

M. Mono Creek, average of three analyses showing different concentrations.

N. Santa Ynez River at Gibraltar, California. Analyses K–N by J. A. Dodge, Water-Sup. and Irr. Paper No. 116, U. S. Geol. Survey, pp. 56–61, 1904. The four streams are in the neighborhood of Santa Barbara, California.

	A.	B.	C.	D.	E.	F.	G.
CO_3	46.16	32.65	26.31	3.17	52.64	54.80	17.62
SO_4	10.75	11.85	13.36	64.28	3.37	3.42	12.72
Cl	.41	4.86	17.01	.34	1.46	1.79	6.93
Ca	22.21	26.68	16.20	1.69	14.12	15.93	3.89
Mg	4.71	1.27	3.64	1.49	12.06	10.89	.....
Na	6.14	.81	15.38	28.09	2.78	4.49	19.58
K	trace	.....	8.10	.94	.78	1.92	.....
SiO_2	7.78	5.81	.....	.....	10.42	6.59	39.26
Al_2O_3	1.84	16.07	.....	.....	2.37	.17	.....
Fe_2O_3	.....		.....	.....			.....
	100.00	100.00	100.00	100.00	100.00	100.00	100.00
Salinity, parts per million	98	31	247	1,481	220	102	121

	H.	I.	J.	K.	L.	M.	N.
CO_3	27.36	3.09	12.55	25.55	27.67	18.80	26.13
SO_4	16.24	47.11	51.31	38.45	37.89	45.68	39.10
Cl	7.18	16.48	5.62	3.01	2.10	3.60	2.69
NO_3	.....	.....	.....	.....	.....	.....	trace
Ca	12.34	5.01	13.76	17.76	18.50	14.83	18.49
Mg	5.83	2.48	6.02	4.62	6.15	5.41	6.29
Na	10.05	24.59	10.74	10.61	7.69	10.85	6.57
K	1.26	1.24	.....	trace	trace	trace	.73
Li	.....	.....	.....	.....	.....	.....	trace
SiO_2	16.69	.....	.....	trace	trace	.24	trace
Al_2O_3	3.05	.....	.....	trace	trace	.25	.....
Fe_2O_3		.....	.....			.34	trace
	100.00	100.00	100.00	100.00	100.00	100.00	100.00
Salinity, parts per million	112	4,685	996	444	521	1,004	821

Although most of these analyses are obviously incomplete, they serve a purpose. They illustrate the distinction between the waters of a humid climate and those of a relatively arid region. The Yukon is a normal carbonate water; the streams of southern California are comparable with the southwestern waters of the preceding section.

THE SASKATCHEWAN SYSTEM.

This complex river system comprises a number of important branches, which finally unite in the Nelson River and empty into Hudson Bay. The following analyses represent waters from this great drainage basin:

Analyses of waters from Saskatchewan system.

A. Red River of the North at Fergus Falls, Minnesota. Analysis by W. A. Noyes, Eleventh Ann. Rept. Minnesota Geol. Nat. Hist. Survey, p. 173, 1884.

B. Red River of the North at Fargo, North Dakota. Analysis by C. F. Sidener for the Northern Pacific Railway. Received through M. O. Leighton.

C. Red River of the North at St. Vincent, Minnesota, near the Canadian boundary. Analysis by W. A. Noyes, op. cit., p. 172.

D. Red River of the North below the Assiniboine.

E. Assiniboine River above its junction with the Red. Analyses D and E by F. D. Adams, Rept. Progress, Geol. Survey Canada, 1878–79, p. 10 H.

F. Nelson River near its mouth.

G. Hayes River opposite York Factory. This stream enters Hudson Bay near the Nelson. Analyses F and G by W. Dittmar, Rept. Progress, Geol. Survey Canada, 1879–80, p. 77 C.

	A.	B.	C.	D.	E.	F.	G.
CO_3	32.52	56.15	41.20	31.47	39.70	16.78	50.36
SO_4	25.56	.87	15.71	22.06	16.52	41.85	.....
Cl	.69	.99	4.89	8.78	5.58	4.68	3.08
PO_4	.....	.....	.19	.....	.....	.....	.....
NO_3	.....	.....	.28	.....	.....	.....	.....
Ca	30.39	18.53	17.55	12.89	13.59	15.91	21.88
Mg	.....	.....	8.23	7.99	7.72	5.65	5.24
Na	1.97 }	3.73	5.64	9.67	11.08	6.22	4.22
K	1.19 }		1.37	1.18	1.16	.97	1.87
Li	.....	.....	.02	.....	.....	.....	.....
SiO_2	.60	.....	4.57	5.72	4.41	7.30	11.48
$(AlFe)_2O_3$	7.08	1.75	.35	.24	.24	.64	2.37
	100.00	100.00	100.00	100.00	100.00	100.00	100.00
Salinity, parts per million	202	398	284	551	509	180	115

The following table gives analyses of the Bow River and its tributaries, the Bow being the main western branch of the Saskatchewan. All of these streams are in the Alberta district, Northwest Territory, Canada. The analyses were made by F. G. Wait, Rept. Geol. Survey Canada, new series, vol. 9, pp. 39–45 R, 1878. The samples were collected at low water.

Analyses of water from Bow River and tributaries.

H. Bow River at Calgary.
I. Elbow River at Calgary.
J. Highwood River at High River.
K. Fish Creek at McLeod Trail.
L. Sheep River near Dowdney.

	H.	I.	J.	K.	L.
CO_3	48.21	44.66	47.78	53.57	45.55
SO_4	14.69	18.80	13.22	5.59	17.13
Cl	.94	.56	.65	.51	.57
Ca	25.23	24.39	24.48	18.82	23.69
Mg	6.95	6.55	6.23	7.57	6.32
Na	2.42	2.77	3.28	7.14	3.92
K	trace	.42	trace	1.34	.43
SiO_2	1.56	1.85	4.36	5.46	2.39
Fe_2O_3	trace	trace	trace	trace	trace
	100.00	100.00	100.00	100.00	100.00
Salinity, parts per million	128	217	183	238	209

SUMMARY FOR NORTH AMERICA.

If now we look back over the analyses of North American rivers, we shall see that, in spite of all differences, certain general tendencies are manifest. It is evident, of course, that a stream may vary in composition from place to place and from time to time; it is plain that the samples analyzed were rarely chosen with reference to any general discussion of American waters; and yet, notwithstanding these adverse conditions, some regularities appear. In the first place, practically all of the waters from east of the Missouri River, with one or two minor exceptions, are waters in which carbonates are largely in excess of sulphates and chlorides, and calcium is the dominating metal. The same rule holds for the extreme northern rivers; but the western tributaries of the Missouri, in general, tell a different story. So also do the waters of New Mexico and Arizona. Here sulphates are in excess of carbonates, and calcium, although sometimes dominant, is not always so. In short, where the rainfall is abundant and the soil is naturally fertile, carbonate waters are the rule; in arid regions sulphates and chlorides prevail. This statement applies to the evidence now in hand, and must not be construed too sweepingly. We are dealing, not with invariable laws, but with tendencies.

The condition thus indicated is probably the outcome of various causes, but one of the latter is easily found. In a fertile region organic matter is abundant and great quantities of carbonic acid are generated by its decay. This carbonic acid, absorbed by the ground water of the soil, acts as a solvent of mineral matter, and carbonates are carried into the streams more abundantly than other salts. In arid regions there is less organic decomposition, less carbonic acid, and a smaller proportion of carbonates is found. Water from a

swamp or forest is very different from water which has leached a desert soil. In the Kansas River and its tributaries the passage from one set of conditions to the other is clearly apparent. Western Kansas is relatively arid, and the western branches of the river are poor in carbonates. Eastern Kansas is fertile, and the eastern affluents reflect its character. It must be borne in mind, however, that we are now considering relative proportions of substances and not absolute amounts. The lower course of a stream is a blend of many waters; and the change from one type to another does not necessarily imply that anything has been lost. Precipitation may have taken place, but in many cases the transformation from sulphate to carbonate is probably due to an overwhelming influx of the latter. The Mississippi itself, in its course southward, must receive carbonates more freely than sulphates; and its final character as it enters the Gulf of Mexico should be that of a carbonate water. So much at least can be safely inferred from the data already in hand. To small streams, it must be remembered, these considerations do not always apply. Local conditions are operative in such cases, and a river issuing from a region rich in gypsum, or fed by brooks affected by beds of pyrite, may have a sulphate character quite independent of the climatic influences which otherwise seem to rule.

RIVERS OF SOUTH AMERICA.

The river waters of South America, except in the Argentine Republic, seem to have received very little attention from chemists. A. Muntz and V. Marcano[a] have described certain waters, from unnamed tributaries of the Orinoco and Amazon, which are colored nearly black by organic acids but contain not over 16 parts per million of mineral matter, and from which lime is practically absent. Apart from a few scattered memoirs I have found little of value relating to the northern part of the continent. The following table gives the available data for the Amazon and its tributaries:

Analyses of water from Amazon River and tributaries.

A. The Amazon between the Narrows and Santarem. Analysis by P. F. Frankland, cited by T. Mellard Reade in Evolution of Earth Structure.

B. The Amazon at Obidos. Mean of two analyses by F. Katzer. See Grundzüge der Geologie des unteren Amazonasgebietes, Leipzig, 1903. Katzer estimates that the Amazon carries annually past Obidos 618,515,000 metric tons of dissolved and suspended matter.

C. The Xingu. Analysis by Katzer, loc. cit.

D. The Tapajos. Analysis by Katzer, loc. cit. Katzer also gives analyses of water from Parana-mirim, the Maecuru, the Itapacurá-mirim, and several fresh-water lakes or lagoons.

[a] Compt. Rend., vol. 107, p. 908, 1888. See also J. Reindl, Natur. Wochenschr., vol. 20, p. 353, 1905.

	A.	B.	C.	D.
CO_3	34.75	24.15	26.78	29.60
SO_4	7.37	2.26	10.57	7.39
Cl	3.85	6.94	6.96	5.77
Ca	21.12	14.69	15.77	16.84
Mg	2.57	1.40	3.92	3.60
Na	1.94	4.24	2.08	1.80
K	2.31	4.76	4.18	3.67
SiO_2	18.80	28.59	21.15	24.02
$(AlFe)_2O_3$	7.29	12.97	8.59	7.31
	100.00	100.00	100.00	100.00
Salinity, parts per million	59	37	45	38

From the southern parts of South America the following waters have been analyzed:

Analyses of water from rivers in southern part of South America.

A. River Plata 5 miles above Buenos Ayres. Analysis by J. J. Kyle, Chem. News, vol. 38, p. 28, 1878.

B. River Plata near Buenos Ayres.[a] Analysis by R. Schoeller, Ber. Deutsch. chem. Gesell., vol. 20, p. 1784, 1887. Water possibly affected by tidal contamination.

C. The Parana 5 miles above its entry into the Plata. Analysis by Kyle, loc. cit.

D. The Uruguay midstream opposite Salto. Analysis by Kyle, loc. cit.

E. The Uruguay above Fray Bentos. Analysis by Schoeller, loc. cit.

F. Rio Negro[b] above Mercedes. Analysis by Schoeller, loc. cit.

G. Colorado River, Argentina. Analysis by Kyle, An. Soc. cient. Argentina, vol. 43, p. 19, 1897.[c]

H. Rio Primero, Argentina.

I. Rio de los Papagayos, Argentina. Analyses H and I by M. Siewert, in R. Napp's The Argentine Republic, pp. 242, 244, 1876.

J. Rio Saladillo, Argentina. Analysis by A. Doering.

K. Rio de Arias, Salto, Argentina. Analysis by M. Siewert.

L. Rio de los Reyes, Jujuy, Argentina. Analysis by M. Siewert. For analyses J, K, and L, see Bol. Acad. nac. cien. Córdoba, vol. 5, p. 440, 1883.

M. Rio Frio, district of Taltal, Chile. Analysis by A. Dietze, cited by L. Darapsky in Das Departement Taltal, p. 93, Berlin, 1900.

N. Rio Copiapo, Chile. Analysis by P. Lemétayer, cited by F. J. San Román in Desierto i Cordilleras de Atacama, vol. 3, p. 191, Santiago, 1902.

[a] For other data relative to the Plata and the Mercedes, see M. Puiggari, An. Soc. cient. Argentina, vol. 13, p. 49, 1882.

[b] An analysis of Rio Negro by Will is cited by S. Rivas, An. Soc. cient. Argentina, vol. 1, p. 326, 1877.

[c] In this memoir Kyle gives analyses of numerous Argentine rivers. The nomenclature, however, is confusing, for descriptive names, such as Negro, Colorado, Salado, Saladillo, etc., are applied to more than one stream in Argentina, and it is not always easy to identify the river to which a given analysis applies.

	A.	B.	C.	D.	E.	F.	G.
CO_3	17.45	11.59	17.73	24.23	21.59	39.10	8.19
SO_4	7.69	17.97	10.13	3.90	6.15	1.23	30.58
Cl	12.59	18.11	15.92	.61	5.12	4.43	24.51
NO_3	.....	6.68	.....	5.50	.....	1.95	.....
Ca	6.18	3.71	7.27	9.82	10.01	17.82	16.24
Mg	3.31	1.42	2.78	2.85	2.97	1.96	1.46
Na	17.34	24.89	14.96	3.75	5.92	10.24	15.78
K	3.09	.....	4.06	3.12	.....	.....	.....
SiO_2	21.32	10.82	20.73	46.22	44.32	21.75	3.24
Al_2O_3	6.62	4.81	3.21	.....	3.92	1.52	.....
Fe_2O_3	4.41		3.21	.....			.....
	100.00	100.00	100.00	100.00	100.00	100.00	100.00
Salinity, parts per million	91	206	98	40	66	132	651

	H.	I.	J.	K.	L.	M.	N.
CO_3	39.47	.06	9.94	39.13	28.27	18.06	6.46
SO_4	5.76	31.81	27.75	13.24	18.17	24.45	36.50
Cl	6.41	32.63	21.51	2.77	5.53	8.04	.....
NO_3	.....	.....	.....	.....	.....	.....	trace.
Ca	16.53	8.01	11.29	19.63	13.20	14.93	6.61
Mg	3.27	.36	2.87	5.20	2.53	2.63	3.52
Na	9.09	26.48	16.12	1.82	7.19	15.37	8.96
K	4.67	.49	4.41	5.75	10.20	.....	.36
SiO_2	8.58	.....	6.11	11.57	12.33	13.22	35.39
Al_2O_3	1.10	.....	.....	.....	.49	.....	2.20
Fe_2O_3	5.12	.....	.....	.89	2.09	3.30	
S	.....	.16	.....	.....	.....	.....	.....
	100.00	100.00	100.00	100.00	100.00	100.00	100.00
Salinity, parts per million	100	9,185	1,213	127	104	186	731

These waters show the same order of variation as those of North America. The water of the Amazon, flowing through forests and in a humid climate, is characterized by dominant carbonates and low salinity. In Argentina many of the streams flow through semiarid plains. In their waters sulphates and chlorides predominate and the alkalies are commonly in excess of lime. The Uruguay is peculiar because of its high proportion of silica—a condition which will be discussed later in the chapter.

WATERS OF WESTERN EUROPE.

Both Bischof and Roth cite numerous analyses of European river and lake waters, but only a few of them need be reproduced here. Many of the streams are small and affected by local conditions; but the predominance of calcium and of the carbonic radicle is clearly shown in most cases. For western waters the following examples are enough for present purposes:

Analyses of waters from western Europe.

A. The Thames. Average of five analyses cited by J. Roth, Allgem. chem. Geol., vol. 1, pp. 456, 457.

B. Lough Neagh, Ireland. Analysis by Hodges, from Roth, loc. cit.

C. The Meuse at Liege, Belgium. Computed from data given by W. Spring and E. Prost, Ann. Soc. géol. Belg., vol. 11, p. 123, 1884. The Meuse carries past Liege, in solution, nearly 1,082,000 metric tons of solids annually.

D. The Seine at Bercy. Analysis by H. Sainte-Claire Deville, Ann. chim. phys., 3d ser., vol. 23, p. 42, 1848.

E. The Loire near Orleans. Analysis by Deville, loc. cit.

F. The Rhone at Geneva. Analysis by Deville, loc. cit. Deville also gives analyses of the Doubs and the Garonne.

G. The Rhone. Average of five analyses by L. Lossier, Arch. sci. phys. nat., 2d ser., vol. 62, p. 220, 1878. Organic matter rejected.

H. The Arve. Average of six analyses by Lossier, loc. cit.

I. Lac Leman. Analysis by R. Brandenbourg, cited by F. A. Forel[a] in Mém. Soc. Helvét., vol. 29, 1884.

	A.	B.	C.	D.	E.	F.	G.	H.	I.
CO_3	36.89	35.23	36.48	39.78	30.92	27.92	36.69	42.37	33.87
SO_4	16.07	10.68	13.13	8.57	1.72	23.18	26.68	18.81	26.66
Cl	5.70	9.62	3.83	2.95	2.16	.55	.71	1.46	.52
NO_3	.....	.....	2.86	4.44	.....	3.13	.31	.32	.....
Ca	27.67	17.71	28.90	29.13	14.31	24.89	26.42	29.64	27.81
Mg	1.85	1.31	2.68	.63	1.34	1.48	3.66	3.17	2.23
Na	3.26	15.41	2.24	2.87	6.93	2.75	} 3.98	} 2.53	2.53
K	1.70	.....	.87	.86	1.64	.88			.25
Li	.....	.....	.05	.....	.....	.....	.....	.....	.....
SiO_2	4.04	3.32	6.02	9.59	31.59	13.08	1.55	1.70	5.63
Al_2O_3	} 2.82	.....	} 2.94	.19	5.29	2.14	.....	.....	} .50
Fe_2O_3		6.72		.99	4.10	.....	.....	.....	
	100.00	100.00	100.00	100.00	100.00	100.00	100.00	100.00	100.00
Salinity, parts per million	270	155	.....	254	134	182	170	192	152

[a] Forel gives several other analyses of Lac Leman. For the Swiss lakes Taney, Champey, Noir, Lauenen, and Amsoldingen, see E. Bourcart, Arch. sci. phys. nat., 4th ser., vol. 15, p. 467, 1903. J. Thoulet (Bull. Soc. géog., 7th ser., vol. 15, p. 557, 1894) gives partial analyses of lakes in the Vosges. For French lakes in general, see A. Delebecque, Les lacs français, Paris, 1898. See also A. Delebecque and L. Duparc, Arch. sci. phys. nat., 3d. ser., vol. 27, p. 569; vol. 28, p. 502, 1892.

In the analyses of the Thames and Lough Neagh the comparatively high figure for chlorine may be partly due to wind-borne salt from the sea. The Thames, however, rises in the midland counties of England, where the waters issuing from the oolites are relatively rich in chlorides.[a]

RIVERS OF CENTRAL EUROPE.

The following table relates to the Rhine and its tributaries. With one exception, the analyses are recalculated from the data as given by Roth.[b]

Analyses of water from the Rhine and tributaries.

A. Lake of Zurich. Analysis by Moldenhauer, 1857.

B. The Aar at Bern. Analysis by Pagenstecher, 1837.

C. The Main above Offenbach. Analysis by Merz, 1866.

D. The Rhine at Basel. Analysis by J. S. F. Pagenstecher, 1837.

E. The Rhine at Strasburg. Analysis by H. Sainte-Claire Deville, Ann. chim. phys., 3d ser., vol. 23, p. 42, 1848.

F. The Rhine at Cologne. Mean of four analyses by H. Vohl, 1870.

[a] See W. W. Fisher, The Analyst, vol. 29, p. 29, 1904.

[b] Allgem. chem. Geol., vol. 1, p. 456.

	A.	B.	C.	D.	E.	F.
CO_3	51.64	48.60	34.39	53.05	36.69	47.06
SO_4	7.90	14.63	26.41	7.96	8.38	12.61
Cl	.59	.08	4.69	.57	.52	4.17
NO_3	.....	.....	.....	.....	1.00	.....
PO_4	.....	.....	.....	.....	.....	.28
Ca	29.10	30.54	23.56	33.53	25.30	27.36
Mg	5.11	4.71	6.90	2.87	.61	5.57
Na	1.60	.18	1.73	.73	2.17	2.69
K	2.00		.....		.66	
SiO_2	2.06	1.26	1.90	1.29	21.07	.17
Al_2O_3	.....	.....	.42	.....	1.09	.09
Fe_2O_3	.....	.....		.....	2.51	
	100.00	100.00	100.00	100.00	100.00	100.00
Salinity, parts per million	141	213	240	166	232	178

These analyses are evidently of very unequal value. The high silica found by Deville is suspicious, and yet Deville was an accurate manipulator.

One of the most thorough hydrochemical studies ever made of any river system is that of the Elbe and its Bohemian tributaries by J. Hanamann.[a] In two memoirs upon the waters of Bohemia he gives over one hundred and twenty analyses, tracing nearly all of the important streams in the upper Elbe basin to their sources, correlating each one with the geological formations in which it rises, and showing the effect produced by their union. Of the Elbe itself thirteen analyses are given; of the Eger, eight; of the Iser, six, and so on. From this wealth of material only a small part can be reproduced here, recalculated as usual to our uniform standard and beginning with the tributaries. With the two exceptions noted, all the analyses cited are by Hanamann.

Analyses of water from tributaries of the Elbe.

A. The Moldau above Prague. Mean of three analyses by A. Bělohoubek, Sitzungsb. K. böhm. Gesell. Wiss., 1876, p. 27.
B. The Moldau below Kralup.
C. The Adler near its mouth.
D. The Iser at its source.
E. The Iser near its mouth.
F. The Eger at its source. Analysis by E. Spaeth, cited by Hanamann.
G. The Eger above Königsberg.
H. The Eger near its mouth, at Bauschowitz.

	A.	B.	C.	D.	E.	F.	G.	H.
CO_3	32.86	34.52	46.23	21.29	47.74	11.68	26.64	26.84
SO_4	11.95	10.20	7.44	6.94	6.55	7.06	19.22	27.45
Cl	10.69	10.17	3.20	11.08	3.00	23.85	8.16	6.55
NO_3	.....	1.76	1.43	1.24	.78	.....	.50	.46
PO_4	.47	.36	.....	.....	.....	.....	.....	.....
Ca	13.52	16.71	26.73	8.14	28.15	6.79	12.86	15.42
Mg	4.88	4.64	2.45	2.19	2.47	2.24	3.51	4.05
Na	10.22	8.40	4.29	13.86	3.71	11.93	11.66	10.46
K	5.19	4.05	2.38	5.54	2.01	6.71	2.98	3.50
SiO_2	8.96	4.99	5.53	28.39	4.96	26.07	12.19	4.17
$(AlFe)_2O_3$	1.26	4.20	.32	1.33	.63	3.67	2.28	1.10
	100.00	100.00	100.00	100.00	100.00	100.00	100.00	100.00
Salinity, parts per million	74	104	195	16	183	17	80	176

[a] *Archiv natur. Landesdurchforschung* Böhmen, vol. 9, No. 4, 1894; vol. 10, No. 5, 1898.

To represent the Elbe itself, the following six analyses have been selected from Hanamann's table:

Analyses of water from the Elbe.

I. The Weisswasser, one of the two chief sources of the Elbe.
J. At Celakowitz, above the mouth of the Iser.
K. At Melnik, above the mouth of the Moldau.
L. At Leitmeritz, above the Eger.
M. At Lobositz, below the Eger.
N. At Tetschen, near the Bohemian frontier.

	I.	J.	K.	L.	M.	N.
CO_3	16.84	45.87	45.04	40.27	38.41	35.88
SO_4	12.86	8.95	8.88	10.86	12.45	14.88
Cl	7.61	3.27	3.56	5.00	5.96	5.87
NO_3	4.28	.90	.94	1.22	1.28	1.40
Ca	8.76	26.41	26.37	22.87	22.19	20.92
Mg	2.19	3.21	2.77	3.24	3.23	3.63
Na	11.06	3.93	4.02	5.62	6.35	6.09
K	2.01	2.46	3.06	2.79	2.87	3.16
SiO_2	31.21	4.09	4.66	7.27	6.42	7.13
$(AlFe)_2O_3$	3.18	.91	.70	.86	.84	1.04
	100.00	100.00	100.00	100.00	100.00	100.00
Salinity, parts per million	13	221	205	157	153	148

At their sources these streams are characterized by very low salinity and a high proportion of silica and alkalies. They gradually increase in salinity, and by blending one with another, approach more and more nearly the normal type of river waters. The Eger is unusually rich in alkalies and chlorine. The minor tributaries of the Elbe vary widely in composition, but in general calcium and carbonates are the chief constituents. In the Schladabach, however, a small affluent of the Eger, sodium and the sulphuric radicle predominate, and in the Chodaubach, another tributary of the same river, there is a solution of gypsum with no carbonates. When the Schladabach enters the Franzensbad moor it carries 94 parts per million of fixed mineral matter; it leaves the moor with a load of 1,542 parts. This change serves to show the importance of ground water in modifying the chemical character of a stream—a point already noticed in studying the rivers of Colorado. For details concerning these and many other small tributaries of the Elbe basin, Hanamann's original memoirs should be consulted. They will well repay careful study.[a]

[a] Other data relative to the Elbe and its tributaries are given by J. J. Breitenlohner, Verhandl. K.-k. geol. Reichsanstalt, 1876, p. 172; and F. Ullik, Abhandl. K. böhm. Gesell. Wiss., 6th ser., vol. 10, 1880. An analysis of the Moldau at Prague, by F. Stolba, is given in Jour. Chem. Soc., vol. 27, p. 971, 1874. A. Schwager (Geognost. Jahresh., 1891, p. 35) gives analyses of water from the Saale, the Eger, and many smaller streams. According to Schwager the Saale carries out of Bavaria, annually, 17,380,000 kilograms of dissolved matter, and the Eger carries 14,000,000 kilograms. For additional data on the waters of the Elbe and the Saale, see R. Kolkwitz and F. Ehrlich, Mitth. K. Prüfungsanstalt für Wasserversorgung, Heft 9, p. 1, Berlin, 1907.

One table of analyses given by Hanamann is peculiarly instructive. It consists of averages, showing the composition of Bohemian waters as related to the rocks from which they flow. These averages, reduced to the standard herein adopted, are as follows:

Average composition of Bohemian waters, classified according to their sources.

A. From phyllite, five analyses.
B. From granite, six analyses.
C. From mica schist, six analyses.
D. From basalt, four analyses.
E. From the Cretaceous, four analyses.

	A.	B.	C.	D.	E.
CO_3	35.94	30.49	32.14	46.85	33.01
SO_4	6.45	14.12	12.86	7.94	27.69
Cl	10.15	6.39	7.24	1.66	2.87
Ca	11.91	11.89	12.61	20.07	22.12
Mg	5.02	3.58	5.08	5.76	5.29
Na	11.20	10.57	10.85	6.22	3.43
K	4.39	5.63	4.22	3.20	2.72
SiO_2	14.94	17.33	15.00	7.67	2.87
Fe_2O_3	.....	.....	.....	.63	.....
	100.00	100.00	100.00	100.00	100.00
Salinity, parts per million	48	65	74	343	603

The following table contains analyses of water from the Danube, taken at various points:

Analyses of water from the Danube.

A. Above the Naab.
B. Above Regensburg.
C. Above the Ilz and Inn.
D. 12 kilometers below Passau. Analyses A to D by A. Schwager, Geognost. Jahresh., 1893, p. 84. Analyses of the Naab, Regen, Isar, Ilz, Erlau, and Inn are also given.[a]
E. At Greifenstein, 20 kilometers above Vienna. Mean of twenty-three analyses by J. F. Wolfbauer, of samples taken at intervals of sixteen days throughout the year 1878. Monatsh. Chemie, vol. 4, p. 417, 1884.
F. At Budapest. Analysis by M. Ballo, Ber. Deutsch. chem. Gesell., vol. 11, p. 441, 1878. Bicarbonates are here reduced to normal salts.

	A.	B.	C.	D.	E.	F.
CO_3	53.51	51.70	50.16	48.29	50.10	49.03
SO_4	7.11	8.54	8.85	10.52	8.81	13.69
Cl	1.20	1.31	1.20	2.25	1.44	1.40
PO_4	trace	trace	trace	trace	.....	.....
NO_2	.....	.06	.06	.06	.....	.....
NO_3	.23	.25	2.14	1.19	1.24	.....
Ca	26.88	27.40	26.59	25.46	26.28	26.78
Mg	6.21	6.00	6.01	6.31	5.95	6.97
Na	1.47	1.12	1.34	1.84	1.69	.93
K	.96	.72	1.12	1.36	.94	.....
SiO^2	1.59	2.42	2.01	2.20	3.35	1.20
TiO_2	trace	trace	trace	trace	.....	.....
Mn	trace	trace	trace	trace	.....	.....
Al_2O_3	.78	.42	.46	.46	.....	.....
Fe_2O_3[b]	.06	.06	.06	.06	.20	trace
	100.00	100.00	100.00	100.00	100.00	100.00
Salinity, parts per million	217	204	201	184	167	151

[a] For older but incomplete analyses of the Regen, Ilz, and Rachelsee, see H. S. Johnson, Liebig's Annalen, vol. 95, p. 230, 1855. An analysis of Danube water taken at Vienna was made by G. Bischof in 1852.

[b] *In Schwager's analyses this is given as FeO. I have recalculated his figures to Fe_2O_3.*

The regularity shown by these figures is very striking. The Danube water is essentially a calcium carbonate water, but the sulphates in it tend to increase in going downstream. According to Wolfbauer, the river carries past Vienna a daily charge of 25,000 metric tons of matter in solution. This is equivalent to an annual load of 9,125,000 metric tons. The mechanical sediment transported at the same time is only three-fifths as much.

Analyses of a few more waters of central Europe are given in the next table:

Analyses of water from central Europe.

A. The Gmundener- or Traunsee, which empties through the Traun into the Danube. Analysis by R. Godeffroy, Jahresb. Chemie, 1882, p. 1623. A large amount of organic matter is reported, but not included in the following table.

B. Walchensee, Bavaria. Analysis by A. Schwager, Geognost. Jahresh., 1894, p. 91.

C. Lago di Garda, northern Italy. Analysis by Schwager,[a] loc. cit.

D. Balaton- or Plattensee, Hungary. Analysis by L. von Ilosvay, in Resultate der wissensch. Erforsch. Balatonsees, vol. 1, p. 6, 1898. Reduced from bicarbonate form.

E. The Vistula at Culm. Analysis by G. Bischof, Lehrb. chem. phys. Geol., 2d ed., vol. 1, p. 275, 1863.

	A.	B.	C.	D.	E.
CO_3	51.68	50.83	53.29	38.80	47.78
SO_4	8.99	11.62	4.17	21.47	9.49
Cl	2.44	.58	3.13	2.98	2.70
Ca	27.54	26.49	24.56	8.87	28.52
Mg	5.21	7.00	6.66	12.81	4.44
Na	2.82	.99	2.49	6.14	1.57
K	.....	.58	2.01	3.27	.39
SiO_2	.31	1.00	2.33	4.48	4.49
Al_2O_3	} 1.01	} .91	1.21	.82	} .62
Fe_2O_3			.15	.36	
	100.00	100.00	100.00	100.00	100.00
Salinity, parts per million	99	121	125	512	178

[a] Schwager also gives analyses of the Starnbergersee and the Eger. In Geognost. Jahresh. 1897, p. 65, he gives good analyses of several Bavarian lakes. All are dilute calcium carbonate waters. For three small lakes near Halle and Eisleben see W. Ule, Die Mansfelder Seen, Inaug. Diss., Halle, 1888, and also, by the same author, Der Würmsee, Leipzig, 1901. A memoir by J. Wolff (Chemische Analyse der wichtigten Flüsse und Seen Mecklenburgs, Wiesbaden, 1872) contains analyses of several small rivers and lakes. Analyses of water from the Oder are given by Luedecke in Das Wasser des Oderthales, etc., Leipzig, 1907.

The Gmundener water closely resembles that of the Danube. The Balaton Lake seems to have an exceptional composition.

RIVERS OF SWEDEN.

For Sweden a single table of analyses must suffice, reduced from the data given by O. Hofman-Bang.[a] The month in which the water was taken is given for each analysis.

[a] Bull. Geol. Inst. Upsala, vol. 6, p. 101, 1905.

Analyses of Swedish waters.

A. The Byske-elf, July.
B. The Klarelf, April.
C. The Klarelf, October.
D. The Ljusnan, June.
E. The Indalself, June.
F. The Fyris, April.
G. The Fyris, October.

	A.	B.	C.	D.	E.	F.	G.
CO_3	50.60	39.44	38.68	43.11	43.93	29.14	14.30
SO_4	4.01	5.85	7.63	4.57	7.24	24.58	39.08
Cl	4.75	5.10	2.24	4.53	3.81	3.15	3.27
NO_3	.....	.....	.46	trace	.....	trace	.13
PO_4	.....	.....	.....	.....	trace	.....	.....
Ca	11.57	14.95	11.67	17.34	18.04	27.49	27.99
Mg	.64	.51	.51	.24	.38	1.69	2.11
Na	9.90	18.77	8.42	9.05	11.33	2.92	3.33
K	9.00		3.78	5.87	4.89	2.36	1.73
SiO_2	7.57	13.09	19.17	13.70	5.78	6.00	6.19
$(AlFe)_2O_3$	1.96	2.29	7.44	1.59	4.60	2.67	1.87
	100.00	100.00	100.00	100.00	100.00	100.00	100.00
Salinity, parts per million	19.25	27.6	25.5	24.8	33.7	170.3	178.1

The remarkably low magnesia and high proportion of alkalies are distinctive peculiarities of these waters. The variability of the Fyris affords another good example of the fact that little significance can be attached to a single analysis of a river water.

RUSSIAN WATERS.[a]

The following analyses are reduced to standard form from the analyses as published by C. Schmidt, of Dorpat:

Analyses of Russian waters.

A. Lake Onega. Mél. chim. phys. St. Petersburg Acad., vol. 11, p. 637, 1882.
B. Lake Peipus. Bull. Acad. St. Petersburg, vol. 24, p. 423, 1878.
C. The Dwina at Archangel. Analysis cited by J. Roth, Allgem. chem. Geol., vol. 1, p. 457.
D. River Om above Omsk. Mém. Acad. St. Petersburg, vol. 20, No 4, 1873.
E. Lake Baikal, Siberia. Same reference as analysis B.

	A.	B.	C.	D.	E.
CO_3	25.76	59.57	26.38	43.73	49.85
SO_4	5.36	.62	18.95	2.15	6.93
Cl	13.97	3.69	17.71	12.81	2.44
NO_3	4.11	.45	.....	.....	.21
PO_4	.47	.14	.29	.....	.72
Ca	8.99	25.54	12.38	11.24	23.42
Mg	6.86	4.15	7.58	9.68	3.57
Na	13.34	2.75	8.98	9.64	5.85
K	9.52	2.07	5.55	2.82	3.44
Rb	.11	.....	.....	trace	.....
NH_4	.56	.10	.....	.....	.08
SiO_2	10.52	.78	1.74	6.51	2.03
Fe_2O_3	.43	.14	.44	1.42	1.46
	100.00	100.00	100.00	100.00	100.00
Salinity, parts per million	49.4	106	187	447	69

[a] For an analysis of the small Lake Ingol, Government of Yeneseisk, Siberia, see S. S. Zaleski, Chem. Zeitung, vol. 16, p. 594, 1892.

THE NILE.

The water of the Nile has been repeatedly analyzed, with varying results. The best data are as follows:[a]

Analyses of water from the Nile.

A. The White Nile near Khartoum. Average of three analyses.

B. The Blue Nile. Average of three analyses. Analyses A and B by W. Beam, Second Rept. Wellcome Research Lab., Khartoum, 1906.

C. Average of twelve analyses of monthly samples, taken from the lower Nile between June 8, 1874, and May 13, 1875. Analyses by H. Letheby, cited by S. Baker in Proc. Inst. Civil Eng., vol. 60, p. 376, 1880. The total solids contained 10.36 per cent of organic matter.

D. The Nile, about two hours journey below Cairo. Analysis by O. Popp, Liebig's Annalen, vol. 155, p. 344, 1870. The total solids contained 12.02 per cent of organic matter.

	A.	B.	C.	D.
CO_3	42.97	41.74	36.50	36.02
SO_4	.25	5.62	17.44	3.93
Cl	4.58	2.19	4.47	2.83
NO_3	.25	.11	trace	.....
PO_4	.....	.....	trace	.59
Ca	9.78	18.38	20.10	13.31
Mg	3.00	4.66	4.01	7.39
Na	17.66	5.43	3.04	13.14
K	6.79	1.32	7.97	3.26
SiO_2	14.72	20.55	6.47	16.88
Fe_2O_3	.....	.....		2.65
	100.00	100.00	100.00	100.00
Salinity, parts per million	174	130	168	119

In Letheby's analyses the excess of potassium over sodium is very peculiar, and at least improbable. In the White Nile the proportion of sulphates is insignificant. Beam accounts for the latter fact by supposing the sulphates to be reduced to carbonates by the organic matter of the "sudd." South of the "sudd" the White Nile contains appreciable sulphates; after leaving the "sudd" it is nearly free from them.[b]

NOTE.—For the other great rivers of Africa chemical analyses are yet to be made, and apart from the few Siberian waters I have found little bearing upon Asiatic streams. An analysis of water from Mahanuddy River at Cuttack, India, was published by E. Nicholson in Jour. Chem. Soc., vol. 26, p. 229, 1873. It is obscurely stated, and I can not attempt to reduce the figures to standard form.

ORGANIC MATTER IN WATERS.

Up to this point we have considered only the fixed inorganic matter found in natural waters; but other impurities which have geological significance are also present. All such waters contain dissolved gases, especially oxygen, nitrogen, and carbon dioxide, and sometimes hy-

[a] A. Chélu (in Le Nil, le Soudan, l'Égypte, Paris, 1891) gives some very questionable analyses of the Blue Nile, the White Nile, and the Nile near Cairo. According to Chélu the river carries past Cairo annually 51,428,500 metric tons of suspended solids and 20,772,400 metric tons in solution.

[b] *On nitrates in the* Nile see A. Muntz, Compt. Rend., vol. 107, p. 231, 1888.

drogen sulphide. The rain brings also nitric acid and ammonia to the soil, and so into the ground water; and various organic substances are invariably found in greater or smaller quantities. These gases and compounds interact in a great variety of ways, and directly or indirectly play an important part in the decomposition of rocks. We have already noted the importance of carbonic acid as a weathering agent, we have seen in a previous chapter how dissolved air represents a concentration of oxygen, but so far the organic matter of water has been tacitly ignored. Its quantity, in percentages of total solids, can be computed in some cases from the original data of the analyses already given. A few of the available figures are as follows:

Percentage of organic matter in various streams.

Danube	3.25	Amazon	15.03
James	4.14	Mohawk	15.34
Maumee	4.55	Delaware	16.00
Nile	10.36	Lough Neagh	16.40
Hudson	11.42	Xingu	20.63
Rhine	11.93	Tapajos	24.16
Cumberland	12.08	Plata	49.59
Thames	12.10	Negro	53.89
Genesee	12.80	Uruguay	59.90

The range of figures is rather wide, but the highest values represent tropical streams. That is, leaving artificial pollution out of account, waters flowing through tropical swamps carry the largest proportion of organic matter. Lough Neagh, in Ireland, doubtless shows the effects of bog water.

The organic matter is derived from the decay of vegetable substances, and by further oxidation may be converted into carbonic acid and water. Its chemical constitution is not accurately known, but it consists in great part of a vague series of vegetable acids, humic, crenic, apocrenic, ulmic, etc., whose precise chemical relations are yet to be made out. The salts of these acids are partly soluble and partly insoluble in water, and the acids themselves are powerful agents in the solution of mineral matter from rocks. According to A. A. Julien,[a] crenic acid is probably present in all spring, lake, and river waters, in which it undergoes oxidation by direct absorption of oxygen from the air. Humic acid is said to decompose silicates,[b] and by a reaction between it and ammonia from rain water, nitrogen from the air, and silica in the soil, a series of silico-azo-humic acids is formed,[c] whose

[a] Proc. Am. Assoc. Adv. Sci., vol. 28, p. 311, 1879. On the organic matter of waters in Finland, see O. Aschan, Zeitschr. prakt. Geol., vol. 15, p. 56, 1907.

[b] A. Rodzyanko, Jour. Chem. Soc., vol. 62, pt. 2, p. 1373, 1892. Abstract from Jour. Russ. Chem. Soc., vol. 22, p. 208.

[c] P. Thenard, Compt. Rend., vol. 70, p. 1412, 1870.

alkaline salts are easily soluble. In short, the humus acids absorb nitrogen from the air to form azo-humic acids, and the latter, in presence of alkaline carbonates, are capable of dissolving silica. Amorphous silica is presumably the most easily attacked, but even quartz may be corroded by this class of organic solvents.[a] To this subject I shall recur in a later chapter.

If now we scrutinize carefully the analyses that have been tabulated in the preceding pages, we shall see that an unusually high proportion of silica is characteristic of two classes of waters. It is very high in the tropical streams, being highest of all in the Uruguay River; and in such cases it may be correlated with the abundance of organic matter, which serves to hold it in solution. No regular and invariable connection between organic matter and silica can be traced, however; other factors enter into the problem presented; but the general tendency seems to be quite clear. If the organic substances in water were invariably the same, a more precise regularity might be indicated; but that, in all probability, is not the case. Furthermore, the solubility of any substance is modified by the presence of other substances, and no general laws covering the entire field have yet been formulated. We can only say that when the proportion of organic matter is very high, that of silica is likely to be high also.

The converse of this proposition is not true, for the reason that another set of conditions operate in bringing about the solution of silica. Small streams, near their sources, especially if they rise in crystalline rocks, also carry a large relative proportion of silica, although its absolute amount may not be large. We see this peculiarity in the headwaters of the Elbe, Eger, and Iser, as shown by Hanamann's analyses, and also in the waters of Yellowstone Lake. This silica is directly derived from the rocks at the time of their decomposition by carbonated waters, and forms a large part of the material which is at first taken into solution. The seepage or ground water which afterwards enters the streams is much poorer in silica, and so the proportion of the latter tends to diminish as a river flows toward the sea.

CONTAMINATION BY HUMAN AGENCIES.

In any complete discussion of river waters account must be taken of contamination by human agencies. Towns and factories drain into the streams, and the extent of the pollution is, for our immediate purposes, best measured by the proportion of chlorine. A good example is furnished by the Chicago drainage canal, which empties into the Desplaines River and thence passes through the Illinois

[a] *See* C. W. Hayes, Bull. Geol. Soc. America, vol. 8, p. 213, 1896.

River into the Mississippi. For the waters thus affected there are abundant data, and the sanitary analyses by the late A. W. Palmer are especially valuable.[a] His annual averages for 1900, representing Illinois River, are stated below. The percentages have been calculated by myself, and the table is to be read going southward.

Total solids and chlorine in Illinois and Mississippi rivers.

	Total dissolved solids.	Chlorine.	
	Parts per million.	*Parts per million.*	*Per cent.*
Illinois River—			
At Morris	235.3	23.1	9.82
At Ottawa	269.4	21.4	7.94
At Lasalle	245.4	18.7	7.62
At Averyville	245.2	17.5	7.14
At Havana	236.3	14.8	6.27
At Kampsville	234.3	14.0	5.98
At Grafton	232.6	13.1	5.63
Mississippi River at Grafton	150.1	3.1	2.06

The decrease in the proportion of chlorine as we follow the Illinois downstream is most striking; but even more surprising are the data concerning the Mississippi a little farther south, at Alton. Here samples were taken 100 feet from the Illinois shore, one-fourth the distance across, in midstream, three-fourths over, and 100 feet from the Missouri shore. The figures represent averages covering periods of from nine months to nearly the entire year 1900.

Total solids and chlorine in Mississippi River at Alton, Ill.

	Total dissolved solids.	Chlorine.	
	Parts per million.	*Parts per million.*	*Per cent.*
100 feet from Illinois shore	194.1	7.7	3.97
One-fourth distance across	182.8	7.1	3.87
Midstream	160.6	4.4	2.74
Three-fourths distance across	155.0	4.1	2.65
100 feet from Missouri shore	154.2	3.5	2.27

The influence of the Illinois River on the eastern side of the Mississippi is perfectly evident. The chief cause of the diminution of chlorine in the Illinois is of course the dilution of the water by other less contaminated sources of supply. In the Kankakee at Wilmington the proportion of chlorine during the same period was only 1.21 per cent, and in the Fox River it was 1.98 per cent, calculated from the total matter in solution. The Kankakee and Fox rivers represent an approximation to the normal chlorine of the region; the Illinois, into which they flow, shows the exaggeration produced by artificial means. Near the ocean the normal chlorine in fresh waters is much

[a] Chemical Survey of the Waters of Illinois, 1897–1902, Univ. Illinois, 1903.

higher and the effects of pollution are less conspicuous than in inland streams.[a]

GAINS AND LOSSES IN WATERS.

In fresh-water lakes and rivers the salinity is naturally low—that is, their waters are very dilute solutions, which do not approach the point of saturation for even the less soluble of their constituents. The relatively insoluble carbonates of calcium and magnesium are held in solution by the excess of carbonic acid which is always present, and are therefore to be regarded, while dissolved, as bicarbonates. Without this solvent much of the load would be deposited, as indeed it is by the evaporation of percolating waters in limestone caves, when stalactites and stalagmites are formed. In a flowing river, which continually receives carbon dioxide from the air and from decaying vegetation, such depositions are not likely to occur, at least not to any notable extent; but when pools are left from an overflow, incrustations of solid matter may soon form. The sediments found in streams are mostly claylike in character, and rarely contain any conspicuous proportion of carbonates or sulphates. Living organisms, especially crustaceans, mollusks, and some aquatic plants, withdraw calcium carbonate from solution; but how great their influence may be, relatively to an entire flow, we have no means of estimating. Infusoria may remove silica from solution, and the same substance can perhaps be thrown down by the oxidation of the humus acids which help to hold it dissolved. By the latter process iron also is deposited, for the soluble ferrous crenate, upon oxidation, yields an insoluble basic ferric salt, and ultimately ferric hydroxide. Many agencies thus combine to modify the composition of a water, but the relative magnitude of the several factors can hardly be determined. The waters gain and lose solid matter, but on the whole, as we follow a stream downward in its course, the gains exceed the losses. When we exclude the elements of dilution by tributaries and the variations in concentration between high and low stages of water we find that salinity generally increases until a river reaches the sea.

Speaking broadly, lake and river waters may be divided into two great classes—namely, sulphate and carbonate waters, according as carbonic or sulphuric ions predominate. The classification can be still further subdivided with reference to the abundance of chlorides or of silica, and again with regard to bases; but the two main divisions still hold. Most waters are either carbonate or sulphate

[a] A good summary of the relations between normal and polluted waters in the eastern and middle States is given by M. O. Leighton in Water-Sup. and Irr. Paper No. 79, U. S. Geol. Survey, 1903. The subject of normal chlorine is considered and the classical "chlorine map" of Massachusetts is reproduced.

See also Sixth Report Rivers Pollution Commission, 1868, on the domestic water supply of Great Britain. This report contains abundant data on chlorine in waters.

in type, and we have already seen how climatic considerations determine, in part at least, the chemical character of a stream. The carbonates are derived from the carbonic acid of rain or from that produced by organic matter, which may act either upon crystalline rocks directly or by solution of limestones. The sulphates originate in the oxidation of pyrite or by the solution of gypsum, and the two classes of waters are almost invariably commingled. Carbonate waters are by far the most common, as the cited analyses show, and the reasons for this fact have already been made clear. We have also seen how a river can change its type in flowing from one point to another, and we have noted the probability that this transformation is commonly due to the blending of streams, or even to the accession of ground waters. One other point in this connection remains to be noted—namely, the possible influence of micro-organisms. It is more than probable that these minute creatures, acting in presence of other organic matter, may reduce sulphates, with elimination of hydrogen sulphide and the formation of carbonates in their stead. That reactions of this kind occur in saline and brackish waters seems to be well established.[a] A suggestive instance came within the experience of the United States Geological Survey. A quantity of water rich in sulphates, from one of the alkaline lakes of California, was sent to the laboratory in a wooden barrel. When received, the water had become fetid with hydrogen sulphide and discolored by extract from the wood—so much so as to be unfit for analysis. How far such changes may occur in nature, especially in swamp waters, remains to be determined. At all events, the possibility of similar transformations can not be ignored.

CHEMICAL DENUDATION.

Now, to sum up: A river is formed by the union of waters from many sources, and each one owes its peculiarities to the conditions existing at its starting point. Carbonic acid, either of atmospheric or of organic origin, is the most abundant and generally the most potent of the agents that dissolve mineral matter from the rocks. Hence carbonate waters are the commonest, and, as streams blend to form the great continental rivers, the carbonate type tends to become more and more pronounced. In the temperate zone, at least, the larger streams resemble one another chemically, and seem on the average to do pretty much the same chemical work in pretty much the same way. The composition of their waters gives a measure of the effects which they have produced; and if the data were adequate the study of chemical denudation would be both profitable and easy. But the data are not

[a] See N. Zelinsky, Jour. Chem. Soc. vol. 66, pt. 2, abstract, p. 200, 1894; also M. W. Beyerinck, idem, vol. 80, pt. 2, abstract, p. 119; and R. H. Saltet and C. S. Stockvis, *idem, vol. 80, p. 2, p. 265, 1901.*

adequate; and so the conclusions which have been reached by various investigators concerning the quantity of solid matter annually carried by rivers to the sea are without sufficient basis. We have already observed that an analysis of river water, taken at a single point and at one stage of concentration, tells us little or nothing of what the stream as a whole may do. Annual averages of water taken near the mouths of rivers are needed before the problems of chemical denudation can be even approximately solved.

For example, Sir John Murray,[a] whose figures were cited at the beginning of this chapter, has computed, by averaging the analyses of nineteen rivers, not only the total amount of saline matter carried annually in solution to the sea, but also its composition. His results are as follows, together with a reduction to percentages, stated in terms of ions:

Saline matter carried annually to the sea by nineteen rivers.

TONS PER CUBIC MILE OF RIVER WATER.		PERCENTAGE COMPOSITION OF INORGANIC MATTER.	
$CaCO_3$	326, 710	CO_3	41. 33
$MgCO_3$	112, 870	SO_4	8. 22
$Ca_3P_2O_8$	2, 913	Cl	1. 85
$CaSO_4$	34, 361	NO_3	2. 82
Na_2SO_4	31, 805	Ca	20. 46
K_2SO_4	20, 358	Mg	4. 65
$NaNO_3$	26, 800	Na	3. 47
NaCl	16, 657	K	1. 33
LiCl	2, 462	SiO_2	10. 75
NH_4Cl	1, 030	R_2O_3	4. 76
SiO_2	74, 577	Minor constituents	. 36
Fe_2O_3	13, 006		100. 00
Al_2O_3	14, 315		
Mn_2O_3	5, 703		
Organic matter	79, 020		
	762, 587		

Organic matter=10.37 per cent of total solids.

This estimate, combined with the figures previously given, is interesting, for it shows the magnitude of the quantities involved in the discussion and emphasizes the preponderance of carbonates in river water. But it can not be applied in anything like an exact way to determining the extent of chemical denudation over all the globe. It is based almost entirely upon European data and to a large extent upon inconclusive analyses. Evidence as to the chemical character of the greater American, African, and Asiatic streams was practically unobtainable, and hence we must regard Murray's computation as only a very rough indication of what the truth may be. Data from all the greater river basins of the world are required *before we can* determine the full significance of chemical denudation.

[a] Scottish Geog. Mag., vol. 3, p. 65, 1887.

The problem, however, can be attacked locally, with reference to special areas. T. Mellard Reade,[a] for instance, in a well-known investigation, has calculated the amount of solid matter annually dissolved by water from the rocks of England and Wales. Putting the average salinity of the waters at 12.23 parts in 100,000, he estimates that the total annual run-off from the area in question carries in solution 8,370,630 tons of dissolved mineral matter, or 143.5 tons from each square mile of surface. At this rate, by the solvent action of water alone, the level of England and Wales would be lowered 1 foot in 12,978 years.

The figures given in the preceding pages, with reference to American rivers, lead to rather lower estimates. The data may be tabulated as follows, with metric instead of British tons.[b]

Saline matter carried annually to the sea by four American rivers.

River.	Area drained.	Saline matter.	
		Total.	Per square mile.
	Sq. miles.	*Tons.*	*Tons.*
St. Lawrence at Ogdensburg	286,900	29,278,000	102
Potomac at Point of Rocks	9,650	771,000	80
Mississippi at New Orleans	1,259,000	98,369,000	78
Colorado at Yuma	225,000	13,416,400	60
	1,780,550	143,834,400	[a] 79.6

[a] Average.

The variation, in tons per square mile, between these figures is quite important. The Colorado drains an arid region, and much of the area ascribed to the river adds little or nothing to it. The humid basin of the St. Lawrence, on the other hand, is a liberal contributor of saline substances. The Mississippi, with humid regions to the east and semiarid plains to the west, shows an intermediate figure for the chemical erosion. The mean value, in round numbers 80 metric tons per square mile, is probably not far from the truth, and presumably is fairly correct for the entire area of the United States, exclusive of the Great Basin. This figure, however, refers only to inorganic matter. If organic impurities are to be included, it should be increased by perhaps 10 per cent, that is, to 88 metric tons per square mile.[c]

[a] Proc. Liverpool Geol. Soc., vol. 3, p. 211, 1876–77. Reprinted under the title "Chemical Denudation in Relation to Geological Time."

[b] 2,205 pounds as against 2,240.

[c] For other estimates of the amount of material carried by various rivers, see Geikie, Text-book of Geology, 4th ed., vol. 1, p. 489, 1903. The Thames, for example, carries in solution past Kingston 548,230 tons of fixed inorganic matter in a year. See also the thesis of A. F. White on the waters of Rockbridge County, Virginia (Washington and Lee University, 1906). This thesis deals with North River, a tributary of the James. In Reade's Evolution of Earth Structure still other data are given.

All of these calculations of course are subject to revision, and even the best of them may be greatly modified. At this point a few words of caution may be useful. Suppose we knew exactly how much dissolved matter a certain river annually discharged into the sea. In order to determine its geological significance, we should have to allow for several factors of other than geological origin. Part of the chlorine came in rainfall from the atmosphere and part of it from pollution by towns. The carbonic acid, also, would be partly of direct atmospheric origin, and only a portion would represent the actual solution of limestones. For the chlorine and its equivalent sodium corrections can probably be made;[a] but discrimination in the case of carbonic acid is more difficult. We must also remember that a river drops some of its burden during its course; so that the amount of saline matter delivered to the ocean is not an exact measure of the rock decomposition which its waters have effected.

[a] Reade, in his calculations relative to England and Wales, takes these disturbing factors into account. Spring and Prost, in their work on the Meuse, and Ullik, in his study of the Elbe, have attempted to measure the amount of human contamination. This factor, obviously, must be very variable. In rivers like the Yukon or the Colorado it is negligible; in the Mississippi or the Hudson it is doubtless large.

CHAPTER IV.

THE OCEAN.

ELEMENTS IN THE OCEAN.

For obvious reasons, some of them purely scientific and some utilitarian, the water of the ocean has been the subject of long and elaborate scientific investigations. Considered broadly, its composition is relatively simple and remarkably uniform; studied minutely, it is found to contain many substances.[a]

In his great memoir on the chemical composition of sea water, G. Forchhammer[b] gave a list of the various elements which, up to his time, had been detected in it. The elements which are sufficiently abundant to be determined in ordinary analyses will be considered later; the substances that are less frequently estimated may be briefly considered now.

Iodine.—Chiefly found in the ashes of seaweeds. According to E. Sonstadt,[c] it is present in sea water in the form of an iodate. A. Gautier,[d] examining surface water from the Mediterranean, found iodine only in the organic matter which he separated by filtration, but at depths beyond 800 meters its compounds were detected in the water itself. Living organisms withdraw iodine from solution. The largest amount of iodine, organic and inorganic, reported by Gautier is 2.38 milligrams to the liter. J. Koettstorfer,[e] in an earlier investigation, found much smaller quantities.

Fluorine.—Found directly, and also in the boiler scale of oceanic steamers. A. Carnot's determinations[f] show that the water of the Atlantic contains 0.822 gram of fluorine to the cubic meter.[g] P. Carles[h] has reported fluorine in the shells of mollusks.

Nitrogen.—Present as ammonia, in organic matter, and in dissolved air. The ammonia of sea water has been repeatedly investigated.

---

[a] For the volume of the ocean and of its contained salts, *see ante*, pp. 22–23.

[b] Phil. Trans., vol. 155, pp. 203–262, 1865. See also J. Roth, Allgem. chem. Geol., vol. 1, p. 400, 1879; and W. Dittmar, Rept. Challenger Exped., Physics and chemistry, vol. 1, pp. 1–251, 1884.

[c] Chem. News, vol. 74, p. 316, 1896.

[d] Compt. Rend., vol. 128, p. 1069, 1899; vol. 129, p. 9, 1899.

[e] Zeitschr. anal. Chemie, vol. 17, p. 305, 1878.

[f] Ann. mines, 9th ser., vol. 10, p. 175, 1896.

[g] See also earlier determinations by G. Forchhammer and G. Wilson, Edinburgh New Phil. Jour., vol. 48, p. 345, 1850.

[h] Compt. Rend., vol. 144, pp. 437, 1240, 1907.

A. Audoynaud,[a] in water from the coast of France, found 0.16 to 1.22 milligrams of NH_3 per liter. L. Dieulafait,[b] in waters from the Red Sea and the coast of Asia, reports quantities from 0.136 to 0.340 milligram. T. Schloesing[c] found a still larger amount, namely, 0.4 milligram. According to J. Murray and R. Irvine,[d] ammonia is more abundant around coral reefs than in the north Atlantic or German Ocean. It occurs principally as ammonium carbonate, formed by the decomposition of organic matter. Elaborate determinations of ammonia in the Mediterranean are given by K. Natterer.[e]

Phosphorus.—Present in the form of phosphates. The phosphatic nodules found on the bottom of the sea are considered further on in this chapter.

Arsenic.—Detected by Daubrée. A. Gautier[f] found its quantity to range from 0.01 to 0.08 milligram per liter.

Silicon.—According to J. Murray and R. Irvine,[g] sea water contains silica. The proportion is from 1 part in 220,000 to 1 in 460,000, or even less. The siliceous organisms which abound in the ocean probably take their silica from clayey matter in mechanical suspension. Small amounts of such matter are carried far and wide by currents, often to a great distance from land.

Boron.—Present in sea water and also in the ashes of marine plants. J. A. Veatch,[h] who examined water from the coast of California, found boric acid almost exclusively in samples collected over a submarine ridge, parallel with the land, but 30 to 40 miles away. He suggests for it a volcanic origin from submerged sources.

Lithium.—Reported in sea water by L. Dieulafait.[i] Also detected spectroscopically by G. Bizio in water from the Adriatic.

Rubidium.—Found in sea water by Sonstadt. Determined quantitatively by Schmidt, whose analyses will be cited later.

Cæsium.—Also found by Sonstadt.

Barium and strontium.—Can be detected by ordinary methods. Also found in the ashes of seaweeds and in boiler scale.

Aluminum and iron.—Easily detected by direct methods.

---

[a] Compt. Rend., vol. 81, p. 619, 1875.

[b] Ann. chim. phys., 5th ser., vol. 14, p. 380, 1878. Dieulafait mentions earlier work by Marchand and Boussingault.

[c] Contributions à l'étude de la chimie agricole, in Fremy's Encyclopédie chimique, 1888.

[d] Proc. Roy. Soc. Edinburgh, vol. 17, p. 89, 1889.

[e] Monatsh. Chemie, vol. 14, p. 675, 1893; vol. 15, p. 596, 1894; vol. 16, p. 591, 1895; vol. 20, p. 1, 1899.

[f] Compt. Rend., vol. 137, pp. 232, 374, 1903.

[g] Proc. Roy. Soc. Edinburgh, vol. 18, p. 229, 1891.

[h] Proc. California Acad. Sci., vol. 2, p. 7, 1859.

[i] Ann. chim. phys., 5th ser., vol. 17, p. 377, 1879. See also Thorpe and Morton's analysis of water from the Irish Sea, 1871, cited on pp. 94, 95.

Manganese.—Easily detected. Noted by Forchhammer and also by Dieulafait.[a] Concretions of manganese oxide are abundant over portions of the sea bottom. Reported by E. Maumené[b] in the ashes of *Fucus serratus.*

Nickel and cobalt.—Found in the ashes of marine plants.

Copper.—Repeatedly detected in sea water, especially by Dieulafait.[c] Also in the ashes of seaweeds and in certain corals.

Zinc.—Reported in sea water by Dieulafait.[d] Also found in the ashes of seaweeds.

Lead.—Found by Forchhammer in a coral.

Silver.—Repeatedly observed. Forchhammer, in the coral above noted, found one part of silver to eight of lead. According to A. Liversidge,[e] silver is present in sea water to the extent of 1 to 2 grains per ton.

Gold.—The fact that sea water contains gold was first established by E. Sonstadt[f] in 1872. Its presence has since been repeatedly verified. In 1892 C. A. Münster[g] examined water from the Kristiania Fjord, Norway, and found in it 5 to 6 milligrams of gold, with 19 to 20 of silver, per ton. In each analysis he used 100 liters of water. Liversidge[h] found the gold in Australian waters to range from 0.5 to 1.0 grain per ton. At either rate, gold is present in the ocean in thousands of millions of tons. Liversidge[i] also detected gold in kelp, rock salt, and a number of saline minerals, such as sylvine, kainite, carnallite, and Chilean niter. In one sample of kelp he found 22 grains of gold per ton, and in a bittern, 5.08 grains. J. R. Don[j] examined both ocean water and oceanic sediments. In the former he detected 0.071 grain of gold per metric ton, but the sediments were barren. In waters collected near the Bay of San Francisco L. Wagoner[k] found, also per metric ton, 11.1 milligrams of gold and 169.5 of silver.

---

[a] Compt. Rend., vol. 96, p. 718, 1883.

[b] Idem, vol. 98, p. 1417, 1884.

[c] Ann. chim. phys., 5th ser., vol. 18, p. 359, 1879.

[d] Idem, vol. 21, p. 266, 1880.

[e] Proc. Roy. Soc. New South Wales, vol. 29, pp. 335, 350, 1895.

[f] Chem. News, vol. 25, pp. 196, 231, 241, 1872; vol. 74, p. 316, 1896; Am. Chemist, vol. 3, p. 206, 1872.

[g] Jour. Soc. Chem. Ind., vol. 11, p. 351, 1892. From Norsk Tekn. Tidsskr.

[h] Proc. Roy. Soc. New South Wales, vol. 29, pp. 335, 350, 1895.

[i] Jour. Chem. Soc., vol. 71, p. 298, 1897.

[j] Trans. Am. Inst. Min. Eng., vol. 27, p. 615, 1897.

[k] Idem, vol. 31, p. 806, 1901. P. DeWilde (Arch. sci. phys. nat., 4th ser., vol. 19, p. 559, 1905) and A. Wiesler (Zeitschr. angew. Chemie, 1906, p. 1795) have published good summaries relative to the detection of gold in sea water, and also discussed the possibility of its economic recovery.

COMPOSITION OF OCEANIC SALTS.

In order to determine the composition of ocean salts innumerable analyses have been made, representing water collected in all quarters of the globe. The older investigations, down to and including the work of Forchhammer, are well summarized by Roth and it is not necessary to recapitulate them here. With a few exceptions I shall confine myself to the more recent analyses, which are numerous enough and varied enough for all present purposes. They show a striking uniformity in the composition of sea salts, the only great variable being that of concentration. As this factor is large, compared with the salinity of lakes and rivers, I shall express it generally in percentages rather than in parts per million. The analyses themselves I have reduced to ionic form, ignoring bicarbonates, as in the tables given in the preceding chapter. The selected data are as follows:

Analyses of oceanic salts.

A. Mean of seventy-seven analyses of ocean water from many localities, collected by the *Challenger* expedition. W. Dittmar, analyst. Challenger Rept., Physics and chemistry, vol. 1, p. 203, 1884. Salinity 3.301 to 3.737 per cent.

B. Atlantic water,[a] mean of twenty-two samples collected on a voyage from the Cape of Good Hope to England. C. J. S. Makin, Chem. News, vol. 77, pp. 155, 171, 1898. Salinity, average, 3.631 per cent.

C. The Atlantic near Dieppe. Analysis by T. Schloesing, Compt. Rend., vol. 142, p. 320, 1906. Salinity, 32.420 grams per liter.

D. The Irish Sea. Analysis by T. E. Thorpe and E. H. Morton, Liebig's Annalen, vol. 158, p. 122, 1871. The small amounts of Fe_2O_3, NH_3, and N_2O_5 are here added together. A trace of lithium was also reported.

E. The Baltic Sea between Oeland and Gothland. Analysis by C. Schmidt, Bull. Acad. St. Petersburg, vol. 24, p. 231, 1878. In all of Schmidt's analyses the bicarbonates given by him have been here reduced to normal salts. The quantities of Fe, PO_4, and SiO_2 found by Schmidt are so small that I have added them together. Salinity of this sample, 0.7215 per cent.

F. The Atlantic at Bahia Blanca, coast of Argentina. Mean of two samples, taken at low and high tide. Analyses by F. Lahille, reported by E. H. Ducloux, An. Soc. cient. Argentina, vol. 54, p. 62, 1902. Salinity, 3.365 per cent. Another pair of analyses is given of water taken at the mouth of Rio Negro.

G. The north Atlantic between Norway, the Faroe Islands, and Iceland, and northward to Spitzbergen. Mean of fifty-one incomplete analyses by L. Schmelck, Den Norske Nordhavs-Expedition, pt. 9, p. 1, 1882. Soda and carbonic acid estimated by calculation, not directly determined. Salinity, 3.37 to 3.56 per cent.

H. The White Sea. Average of three analyses by C. Schmidt. Bull. Acad. St. Petersburg, vol. 24, p. 231, 1878. Salinity, 2.598 to 2.968 per cent.

I. The Arctic Ocean between the White Sea and Nova Zembla. Mean of two analyses by Schmidt, loc. cit.

J. The Siberian Ocean. Water collected by the *Vega* expedition. Mean of four analyses by Forsberg, Vega Exped. Rept., vol. 2, p. 376, 1883. Salinity, 1.378 to 3.457 per cent.

K. The Mediterranean near Carthage. Analysis by T. Schloesing, Compt. Rend., vol. 142, p. 320, 1906. Salinity, 38.9744 grams per liter.

L. The Mediterranean, midsea, between Bizerta and Marseilles. Salinity, 38.789 grams per liter. Analysis by Schloesing, loc. cit.

M. The eastern Mediterranean,[b] waters collected during the voyages of the Austrian steamer *Pola*. Analyst, K. Natterer, Monatsh. Chemie, vol. 13, pp. 873, 897, 1892; vol.

---

[a] Other analyses of Atlantic water, taken off the coast of Brazil, with analyses of water from the mouths of the Amazon, are given by F. Katzer, in Sitzungsb. K. böhm. Gesell. Wiss. 1897, No. 17. These represent mixtures of sea and river water. For special determinations of bromine in sea water, and its ratio to the chlorine, see E. Berglund, Ber. Deutsch. chem. Gesell., vol. 18, p. 2888, 1885.

[b] An analysis of water from the Ionian Sea, by F. Wibel, is printed in Ber. Deutsch. chem. Gesell., vol. 6, p. 184, 1873. One by A. Vierthaler (Sitzungsb. Akad. Wien, vol. 56, p. 479, 1867), of Adriatic water taken near Spalato, shows abnormally low sodium and high calcium, presumably due to admixtures of water from the land.

14, p. 624, 1893; vol. 15, p. 530, 1894. Three hundred samples of water were examined, some only for gases. The figures given here are the average from forty-two analyses which were fairly complete. Salinity, 3.836 to 4.115 per cent.

N. The Sea of Marmora. Natterer, Monatsh. Chemie, vol. 16, p. 405, 1895; 44 partial analyses. Natterer gives the figures here utilized as averages of varying numbers of determinations. Mg, Na, and K not determined. Salinity, 2.310 to 4.061 per cent.

O. The Black Sea. Average of six analyses by S. Kolotoff, Jour. Russ. Phys. Chem. Soc., vol. 24, p. 82, 1893. Salinity, 1.826 to 2.223 per cent.

P. The Suez Canal[a] at Ismailia. Analysis by C. Schmidt, Bull. Acad. St. Petersburg, vol. 24, p. 231, 1878. Salinity, 5.103 per cent.

Q. The Red Sea near the middle. Analysis by Schmidt, loc. cit. Salinity, 3.976 per cent.

R. The Red Sea. Average of four analyses by Natterer, Monatsh. Chemie, vol. 20, p. 1, 1899; vol. 21, p. 1037, 1900. Water collected in the Suez Canal, the Timsah Lake, and the two Bitter Lakes. Many other partial analyses are given. The salinity of these particular samples ranged from 5.085 to 5.854 per cent.

	A.	B.	C.	D.	E.	F.	G.	H.	I.
Cl	55.292	55.185	55.04	55.21	55.01	54.62	55.46	55.22	55.30
Br	.188	.179	.19	.19	.13	.....		.14	.14
SO_4	7.692	7.914	7.86	7.69	8.00	8.01	7.59	7.88	7.78
CO_3	.207	.213	.18	.09	.14	.27	.30	.10	.07
Na	30.593	30.260	30.71	30.82	30.47	30.20	30.53	30.65	30.85
K	1.106	1.109	1.06	1.16	.96	2.10	1.12	.93	.89
Rb	.....	.....	.....	.....	.04	.....	.....	.04	.04
Ca	1.197	1.244	1.27	1.21	1.67	1.36	1.21	1.21	1.16
Mg	3.725	3.896	3.69	3.61	3.53	3.36	3.79	3.75	3.69
Fe, SiO_2, PO_4	.....	.....	.....	.....	.05	.....	.....	.08	.08
Fe, NH_4, NO_3	.....	.....	.....	.02	.....	.....	.....	.....	.....
Al_2O_3, Fe_2O_3, SiO_2	.....	.....	.....	.....	.....	.08	.....	.....	.....
	100.000	100.000	100.00	100.00	100.00	100.00	100.00	100.00	100.00

	J.	K.	L.	M.	N.	O.	P.	Q.	R.
Cl	55.45	55.53	55.11	55.30	55.45	55.12	55.59	55.60	55.96
Br		.18	.19	.16	.17	.18	.14	.13	.18
SO_4	7.97	7.74	7.89	7.72	7.67	7.47	7.67	7.65	7.49
CO_3	.....	.19	.20	.19	.28	.46	.01	.02	.13
Na	30.41	30.37	30.64	30.51	.....	30.46	31.21	30.81	30.31
K	1.17	1.09	1.09	1.12	.....	1.16	.64	.97	1.06
Rb	.....	.....	.....	.....	.....	.....	.03	.04	.....
Ca	1.18	1.26	1.23	1.19	1.22	1.41	1.05	.89	1.22
Mg	3.82	3.64	3.65	3.81	.....	3.74	3.64	3.87	3.65
Fe, SiO_2, PO_4	.....	.....	.....	.....	.....	.....	.02	.02	.....
	100.00	100.00	100.00	100.00	.....	100.00	100.00	100.00	100.00

[a] For other data on the Suez Canal, see L. Durand-Claye, Ann. chim. phys., 5th ser., vol. 3, p. 188, 1874. Very high salinities were noted. For a recent, incomplete analysis of Red Sea water, see J. B. Coppock, Chem. News, vol. 96, p. 212, 1907.

Some of the differences between the foregoing figures are no larger than can be ascribed to differences in analytical methods or in the atomic-weight factors used for calculation. The waters of the Baltic and Black seas, with their very low salinity, show the effect of dilution by fresh water, which appears in the slightly higher percentage of calcium. Still, allowing for all possible sources of divergence, the essential uniformity in composition of ocean salts is perfectly clear. The mass of the ocean is so great, and the commingling of its waters by winds and currents is so thorough, that the local changes produced by the influx of rivers are exceedingly small. The salinity may range from less than 1 to over 4 per cent, but the saline composition remains practically the same.

For the composition of ocean salts in general, Dittmar's average should be taken as the standard of comparison. It represents the largest number of complete analyses and the greatest refinement of methods; the samples examined covered the widest geographic range and were drawn from various depths of water. Some were surface specimens, others from the bottom of the sea, and still others from points between, and all the results lead to the same general conclusion of nearly uniform composition, in spite of variable salinity. The individual analyses vary but little from the mean. The salinity is shown to be a function of temperature, pressure, and density; and the last factor is represented by J. Y. Buchanan's elaborate determinations, which appear in the same volume with Dittmar's analyses.[a] In general, according to the summary given in the "Narrative" of the *Challenger* expedition,[b] the density and therefore the salinity of ocean water diminishes from the surface to a depth of 800 to 1,000 fathoms, and then increases to the bottom. Toward both poles there are areas of concentration due to the formation of ice, a process which removes water from liquid circulation, leaving a large part of its salts behind. Freezing, as O. Pettersson[c] has shown, modifies the composition of salt water, so that the brine formed from melting ice differs notably from the parent solution. Two analyses by Forsberg[d] serve to illustrate this point. Both are here reduced to standard form in order to facilitate comparison with those of normal sea water.

Analyses of brine from melting ice.

A. Liquid intermingled with snow, collected on Arctic ice at −32°.
B. Another sample free from snow, also collected at −32°.

	A.	B.
Cl+Br	62.47	63.52
SO_4	1.26	.82
Na	25.88	27.85
K	.97	1.06
Ca	2.00	1.51
Mg	7.42	5.24
	100.00	100.00

The elimination of sulphates and the increase of chlorides is here clearly indicated, and if we refer back to the tables previously given we shall see that the Arctic waters are all slightly higher in sulphates than Dittmar's average for the great oceans.

[a] Natterer also, in the memoirs already cited, discusses the relations between density and salinity. So, too, does H. Tornoe in Den Norske Nordhavs-Expedition, 1880. See also memoirs by A. Bouquet de la Grye, Ann. chim. phys., 5th ser., vol. 25, p. 433, 1882; and A. Chevallier, Compt. Rend., vol. 140, p. 902, 1905. On this theme there is an extensive literature, but physical problems can be only incidentally considered in the present memoir.

[b] Vol. 2, pp. 948–1003, 1882.

[c] Vega Exped. Rept., vol. 2, pp. 349–380, 1883.

[d] *See O. Pettersson, op. cit.*, p. 376, 1883.

In one sense the salinity of sea water is a function of climate, at least so far as surface waters are concerned. Where the rainfall is slight and the evaporation rapid, concentration occurs; where the atmosphere is saturated with moisture the reverse is true. The Red Sea shows the maximum effect of evaporation and the highest salinity; the Mediterranean is next in order. West of the Nile no large rivers enter the Mediterranean; the evaporation along the African shore is very great, and the salinity is therefore excessive. Furthermore, rainfall serves to dilute the superficial layers of the ocean, and the same effect is produced by the influx of streams. The Black Sea, for instance, is diluted by the Danube, and its average salinity barely exceeds 2 per cent. When a river enters the ocean its waters tend to flow upon the surface, and its influence may be detected at great distances, sometimes hundreds of miles from land. Salinity, in short, is the product of many agencies, and the commingling of waters is never quite complete. In view of conditions like these the nearly uniform composition of sea salts is all the more striking.

It is commonly assumed that the salts of the ocean are derived from the decomposition of rocks by flowing and percolating waters, which finally deposit their burden in the great general reservoir. That this opinion is in a very large measure correct is unquestionable; whether it is wholly true, without qualification, is another matter. We have already seen, in the preceding chapter, that an enormous mass of soluble salts is annually discharged by rivers into the sea, but its composition is very different from that of the saline substances which we are now considering. In the one class of waters carbonates and calcium prevail, in the other we find mainly chlorides and sodium. In their relative proportion of sulphates the fresh and salt waters diverge less widely. If, then, ocean water is continually receiving water unlike itself, its composition must be slowly changing, but the gains, although large in themselves, are relatively small in comparison with the vast accumulations of saline matter into which they diffuse. Whatever changes may take place must proceed very slowly, and no known methods of analysis are delicate enough to detect them, even were the observations to be continued through many centuries. For instance, calcium is one of the minor constituents of sea water, and yet J. Murray and R. Irvine[a] estimate that the discharge of rivers would require 680,000 years to make up the total oceanic amount.[b]

---

[a] Proc. Roy. Soc. Edinburgh, vol. 17, pp. 100–101, 1889.

[b] R. A. Daly (Am. Jour. Sci., 4th ser., vol. 23, p. 93, 1907) has argued that the pre-Cambrian ocean was limeless, or nearly so. For a statistical paper on the mineral matter in the sea, see R. D. Salisbury, Jour. Geol., vol. 13, p. 469, 1905. See also A. C. Lane, Jour. Geol., vol. 14, p. 221, 1906, and A. B. Macallum, Trans. Canadian Inst., vol. 7, p. 35, 1903.

Practically, then, the composition of the ocean is very nearly constant, and has been so for long periods of time. We can not, by means of analysis, measure the changes in it, but we can observe some of them in operation, and see whither they tend. They are due either to gains or losses of material, and both conditions have been noted in the preceding pages. The gains from rivers and from rainfall are obvious; the losses by precipitation we shall examine presently. Some salts, as we observed in studying the atmosphere, are lifted from the ocean to fall again, partly upon the land, in rain. Much of this material returns into the sea, but we can not assume that all of it is regained. This loss, however, is trifling, and needs no further consideration here. Streams bring more chlorine and more sodium into the ocean than it loses through the mechanical action of the air. For these constituents a small net gain may safely be taken for granted. As for the changes in composition produced in sea water by freezing, they are local and transitory in character. When the ice melts, its saline contents are restored to oceanic circulation, although not always at the point from which they were withdrawn. To the slight change thus produced in Arctic waters reference has already been made.

CARBONATES IN SEA WATER.

Although calcium and carbonic acid are subordinate constituents of sea water, their importance can hardly be overestimated. They are the chief additions made by rivers to the ocean, and they are the substances most largely withdrawn from it by living organisms. Removed from solution, they form calcium carbonate, and that is the principal material of corals and shells.

Normal calcium carbonate is nearly but not quite insoluble in water. Upon this point many observations have been made. According to T. Schloesing,[a] whose data appear to be trustworthy, a liter of water at 16° can dissolve 0.0131 gram of $CaCO_3$. With respect to sea water, however, the different varieties of the carbonate behave differently. This has been shown by R. Irvine and G. Young,[b] who found that amorphous calcium carbonate is more soluble than the crystalline forms. To dissolve 1 part of the former 1,600 parts of sea water are required, as compared with 8,000 parts for the crystalline carbonate. This difference bears directly upon the theory of coral reefs. The living animal secretes amorphous carbonate, but after decomposition a partial change to crystalline carbonate occurs. Without this molecular rearrangement the coral would much more largely dissolve and its stability would be greatly diminished.

[a] Compt. Rend., vol. 74, p. 1552, 1872.

[b] Proc. Roy. Soc. Edinburgh, vol. 15, p. 316, 1888. For other data on the solubility of calcium carbonate in sea water, see W. S. Anderson, Proc. Roy. Soc. Edinburgh, vol. 16, p. 318, 1889; and J. Thoulet, Compt. Rend., vol. 110, p. 652, 1890.

Some re-solution, however, occurs, especially where the waves have beaten the coral into sand, and this subject has been well studied by J. Murray and R. Irvine.[a] They find that the porous corals dissolve more readily than the compact varieties.

In presence of free carbonic acid, the solubility of calcium carbonate is increased many fold. If we disregard ionization we may say that calcium bicarbonate, $CaH_2C_2O_6$ is then formed. Of this salt, as shown by F. P. Treadwell and M. Reuter,[b] a liter of pure water at 15° can dissolve 0.3850 gram, a quantity which may be considerably increased by an excess of carbon dioxide in the water. In sea water this solubility is modified by the presence of other compounds. E. Cohen and M. Raken,[c] experimenting with an artificial sea water, found that at 15° it was saturated by 55.6 milligrams of fixed CO_2 per liter, equivalent to 0.1264 gram of $CaCO_3$. According to G. Linck,[d] the maximum solubility of calcium carbonate in sea water at 17°–18° is 0.191 gram per liter. The total quantity of calcium carbonate in average sea water, as shown by Dittmar's analyses, and upon the assumption that all of the CO_3 radicle is thus combined, is not far from 0.121 gram per liter. This, which is a maximum, is even below the saturation figure given by Cohen and Raken, and much lower than that of Linck. It would be diminished by the formation of other carbonates, and it must vary with fluctuations in the free or half-combined carbonic acid of the water. The latter constituent of sea water does not appear in the analyses of dried oceanic salts.

Calcium bicarbonate is very unstable and can be broken down to normal carbonate and free carbon dioxide by evaporation, by rise of temperature, or by mechanical agitation.[e] Under certain conditions the carbonate thus produced may assume the solid form, and be precipitated as a sort of calcareous ooze. This, however, can take place only in very shallow waters, and especially near the mouths of streams which carry carbonates in maximum amount. Such a deposition of calcium carbonate, forming a crystalline limestone, was long ago observed in the delta of the Rhone: and B. Willis[f] has recorded a similar reaction which is taking place among the Florida keys. Sea water, however, is not saturated with carbonates, and a precipitate forming on the surface of the open ocean would be redissolved before it could settle to the bottom. Even shells undergo solution, and in sufficiently deep water they may entirely disappear. In the reports of the *Challenger* expedition there is much valuable information on this point.[g] Pteropod remains were never found on the ocean floor

[a] Proc. Roy. Soc. Edinburgh, vol. 17, p. 79, 1889.
[b] Zeitschr. anorg. Chemie, vol. 17, p. 170, 1898.
[c] Proc. Sec. Sci., Amsterdam Acad., vol. 3, p. 63, 1901.
[d] Neues Jahrb., Beil. Bd. 16, p. 505, 1903.
[e] W. Dittmar, Challenger Rept., Physics and chemistry, vol. 1, p. 211, 1884.
[f] Jour. Geol., vol. 1, pp. 500–520, 1893.
[g] *See summary in vol. 2 of the* Narrative, pp. 948 et seq., 1882.

at depths below 1,500 fathoms, but the more resistant globigerina was collected at 2,500 fathoms. These animals live at or near the surface; after death the shells slowly sink, and, while sinking, partially or wholly dissolve. The decay of their organic matter generates abundant carbonic acid, and this aids in effecting solution. Be this as it may, the *Challenger* investigations show that the quantity of calcium carbonate on the bottom of the ocean depends in great measure upon the depth of water. Beyond the limits indicated little calcium carbonate is found, a fact which will be considered more in detail presently.

Calcium carbonate, then, takes part in a great system of changes whose magnitude and direction can hardly be estimated. It enters the sea in fresh waters; part of it is withdrawn by living animals to form coral or shell; some of the material thus used is redissolved, but much of it is permanently deposited in limestones or calcareous shales. Limestone formations of marine origin, in all quarters of the globe, testify to the importance of these processes. Living animals secrete more calcium carbonate than is redissolved,[a] but the inflow of fresh waters tends to supply the loss. Whether a balance is preserved it is impossible to say. The problem is complicated by the fact that the erosion of limestones laid down in former geological periods now supplies material to streams, thus returning to the ocean carbonates which were once withdrawn from it.[b]

In this system of gains and losses some otherwise unimportant constituents of sea water play an interesting part. Radiolarians, diatoms, and siliceous sponges extract silica from the ocean; this material is finally deposited upon the sea floor, and does not redissolve, or at least not readily.[c] The silica brought in by rivers is partly disposed of in this way. Phosphates are also withdrawn, but the bony parts of marine creatures, after the death of the latter, go to a great extent into solution again. Iron, silica, and some potassium are laid down in the form of glauconite; and the substances dredged up from the bottom of the ocean tell us of still other reactions which are not easy to explain.

OCEANIC SEDIMENTS.

On the subject of oceanic sediments there is a voluminous literature. A great part of it relates to what may be called mechanical deposits, like gravel, sand, river silt, and so on—a class of substances that do not concern us now. Their chemical character will be discussed else-

[a] See J. Murray and R. Irvine, Proc. Roy. Soc. Edinburgh, vol. 17, p. 79, 1889.

[b] On the circulation of calcium carbonate, and its relation to the age of the earth, see E. Dubois, Proc. Sec. Sci., Amsterdam Acad., vol. 3, pp. 43, 116, 1901.

[c] The insolubility of silica in sea water is great, but not absolute. J. Murray and A. F. Renard (*Challenger* Rept., Deep-sea deposits, p. 288, 1891) find that some silica can be dissolved out from diatomaceous ooze.

where, with reference to their origin. Near land, and especially at the mouths of rivers, the sea bottom is covered mainly by mechanical sediments, or by the remains of marine animals; in mid-ocean the deposits are of a very different type.

An entire volume of the *Challenger* reports, by J. Murray and A. F. Renard, is devoted to the subject of "Deep-sea deposits," and special attention is paid to substances formed by chemical action on the ocean floor.[a] The larger deposits may be classified as follows:

Deposits on the ocean floor.

Name.	Average depth in fathoms.	Percentage of $CaCO_3$.
Red clay	2,730	6.70
Radiolarian ooze	2,894	4.01
Diatom ooze	1,477	22.96
Globigerina ooze	2,049	64.47
Pteropod ooze	1,044	79.25

The oozes derive their names from the characteristic organic remains which they contain, and they merge by slight gradations one into another. The classification is obviously approximate, not absolute. If we consider them together, and include the coral muds, the average percentage of calcium carbonate upon the sea bottom at various depths is as follows:

Percentage of calcium carbonate on the ocean floor at various depths.

Under 500 fathoms	86.04	2,000 to 2,500 fathoms	46.73
500 to 1,000 fathoms	66.86	2,500 to 3,000 fathoms	17.36
1,000 to 1,500 fathoms	70.87	3,000 to 3,500 fathoms	.88
1,500 to 2,000 fathoms	69.55	3,500 to 4,000 fathoms	none

The disappearance of carbonates with increasing depth is thus clearly shown.

Of all these deposits, the red clay, which covers about 51,500,000 square miles, is the most extensive, and from a chemical point of view, the most interesting. It is universally distributed in the oceanic basins, but is typical only at depths ranging from 2,200 to 4,000 fathoms and far from land. Various theories have been proposed to account for its formation; but Murray and Renard look on it as essentially a chemical deposit, produced by the decomposition of silicates of volcanic origin. Remnants of volcanic rocks are found on nearly all parts of the ocean floor, and fragments of pumice are particularly common. Some of these doubtless came from ordinary subaerial volcanoes, either as direct flows into the ocean, or as volcanic dust borne

[a] See also J. Murray, Geog. Jour., vol. 19, p. 691, 1902; on material collected in 1901 by S. S. *Britannia*.

long distances by currents of air. Other fragments represent submarine volcanoes. Some of the fragments studied by Murray and Renard were quite fresh, others were largely decomposed; and in a number of them zeolites had been formed by subaqueous alteration. Crystals of phillipsite were repeatedly identified. The color of the clay is due to ferric oxide or hydroxide, which is easily removable by means of strong acids. In all essential respects the clay resembles the residues formed by the decay of igneous rocks. Its composition, as shown by many analyses, is extremely variable.

That sea water will attack and dissolve silicates is well known, although its efficiency is less than that of fresh water. On this subject the experiments of J. Thoulet [a] have been often quoted, and A. Johnstone [b] has shown that even so refractory a mineral as talc is slowly but perceptibly soluble. The process of change is of course almost inconceivably slow; but in the quiet depths of the ocean it has doubtless been going on throughout all geological time. It began when the first volcanic ejectamenta entered the sea, if such a moment can be imagined, and has been operative continuously to the present day. Cosmic and other dusts have contributed something to the formation of the clay, and so, too, have animal remains; but volcanic matter seems to have been the chief starting point. This is the view of Murray and Renard, and it is the opinion best sustained by chemical evidence.

In addition to the widespread formations mentioned in the foregoing paragraphs, the sea bottom yields many interesting products of a sporadic or local character. Among them are the well-known manganese and phosphatic nodules and glauconite; and these we may briefly consider in regular order.

Manganese, as oxide or hydroxide, exists in all deep-sea deposits, sometimes as grains in the clay or ooze, sometimes as a coating upon pumice, coral, shells, or fragments of bone, and often in the form of nodular concretions made up of concentric layers about some other substance as a nucleus.[c] Even in shallow waters, as in Loch Fyne in Scotland, these nodules have been found,[d] but they seem to be more characteristic of the deeper ocean abysses, whence the dredge often brings them up in great numbers.

The origin or mode of formation of the manganese nodules is still in doubt. Murray [e] regards the manganese as derived, like the red clay, from the subaqueous decomposition of volcanic débris. C. W.

---

[a] Compt. Rend., vol. 108, p. 753, 1889. See also recent work by J. Joly, in Compt. Rend. VIII. Cong. géol. internat., p. 774, 1900.

[b] Proc. Roy. Soc. Edinburgh, vol. 16, p. 172, 1889.

[c] For full description see Challenger Rept., Deep-sea deposits, pp. 341–378, 1891. See also J. Murray and R. Irvine, Trans. Roy. Soc. Edinburgh, vol. 37, p. 721, 1895.

[d] J. Y. Buchanan, Proc. Roy. Soc. Edinburgh, vol. 18, p. 19, 1890.

[e] *Proc. Roy.* Soc. Edinburgh, vol. 9, p. 255, 1876.

Gümbel [a] attributes the nodules to submarine springs holding manganese in solution, which is precipitated on contact with sea water. Buchanan [b] invokes the reducing agency of organic matter, which transforms the sulphates of sea water to sulphides, precipitating iron and manganese in the latter form to be subsequently oxidized. This view was contested by R. Irvine and J. Gibson,[c] who showed that manganese sulphide was decomposed by sea water, the manganese redissolving as bicarbonate. J. B. Boussingault [d] holds that the manganese was derived from carbonates carried in solution by oceanic waters, and a similar explanation has been offered by L. Dieulafait.[e] The oxidation of the carbonates is supposed to take place at the surface, through atmospheric contact, after which the precipitated oxide falls to the bottom of the sea.

Of all these theories, that of Murray seems to be the best substantiated. The manganese can easily be derived from the alteration of rock fragments, as it is by weathering on land; it goes into solution as carbonate, is oxidized by the dissolved oxygen of the sea water, and is precipitated near its point of derivation around any nuclei which happen to be at hand. The nodules occur in close association with altered volcanic materials, and most abundantly in connection with the red clay of similar origin; furthermore, their impurities are of the kind which the suggested mode of formation would lead us to expect. In composition the nodules vary widely, ranging from 4.16 to 63.23 per cent of manganese oxide. The analysis by J. Gibson [f] is the most complete one among the many which were made, and is therefore selected as representative. The entire sample contained—

Water	29.65
Aqueous extract [g]	2.44
Insoluble residue	17.93
Portion soluble in HCl	49.97
	99.99

[a] See abstract in Neues Jahrb., 1878, p. 869.
[b] Proc. Roy. Soc. Edinburgh, vol. 18, p. 17, 1890.
[c] Idem, vol. 18, p. 54, 1890.
[d] Ann. chim. phys., 5th ser., vol. 27, p. 289, 1882.
[e] Compt. Rend., vol. 96, p. 718, 1883.
[f] Challenger Rept., Deep-sea deposits, pp. 417–423, 1891.
[g] Saline matter unavoidably inclosed in the nodules. Gibson gives its composition in detail.

The insoluble and soluble portions, recalculated separately, are represented in the subjoined statement:

Analysis of manganese nodule.

	Portion soluble in HCl.	Insoluble portion.
SiO_2	.....	74.58
TiO_2	.....	.72
Al_2O_3	6.34	12.93
Fe_2O_3	26.97	4.79
MgO	4.60	.....
CaO	4.02	1.45
SrO	.....	.11
BaO	.....	.67
MnO	42.94	.....
NiO	1.96	.....
CoO	.56	.....
ZnO	.20	.....
CuO	.74	.....
PbO	.10	.....
Tl_2O	.06	.....
Na_2O	.....	3.62
K_2O	.....	.95
P_2O_5	.22	.11
V_2O_5	.14	.....
MoO_3	.20	.....
SO_3	.94	.....
CO_2	.58	.....
Peroxide oxygen	9.42	.....
	99.99	99.93

If we include in this analysis the water of the original material we see that it represents a mixture of manganese, iron, and aluminum hydroxides, soluble in hydrochloric acid, with an insoluble residue of silicates. The specimen came from a depth of 2,375 fathoms.

The phosphatic concretions found on the ocean floor offer a simpler problem for solution. As Murray and Renard [a] show, they are directly derived from the "decaying bones of dead animals, upon which carbonic acid exerts a powerful solvent action." They form, like the manganese nodules, around various nuclei, but preferably upon organic centers, such as shells. In many cases the phosphatic matter was first deposited in cavities of shells, around which the nodules continued to grow, inclosing various muddy impurities. Probably the ammoniacal salts which are generated by the decomposition of organic matter in the bone play some part in the precipitation of the calcium phosphate. The following analyses, by Klement, show the composition of these bodies. A was from a depth of 150 and B from 1,900 fathoms.

[a] Challenger Rept., Deep-sea deposits, pp. 397–400, 1891. On the phosphatic nodules of the Agulhas Bank, see L. W. Collet, Proc. Roy. Soc. Edinburgh, vol. 25, p. 862, 1905; and L. Cayeux, Bull. Soc. géol., 4th ser., vol. 5, p. 750, 1906.

Analyses of phosphatic concretions from sea bottom.

	A.	B.
P_2O_5	19.96	23.54
CO_2	12.05	10.64
SO_3	1.37	1.39
SiO_2	1.36	2.56
CaO	39.41	40.95
MgO	.67	.83
Fe_2O_3	2.54	2.79
Al_2O_3	1.19	1.43
Loss on ignition	undet.	3.65
Insoluble residue	17.34	11.93
	95.89	99.71

Analyses of the insoluble residue gave the following results:

Analyses of insoluble residue from phosphatic concretions.

	A.	B.
SiO_2	77.43	76.58
Al_2O_3	12.40	13.85
Fe_2O_3	7.91	7.93
CaO	1.07	1.27
MgO	1.02	1.18
	99.83	100.81

The concretions, then, consist mainly of calcium phosphate and carbonate, mixed with sand and clay.

The last of the oceanic deposits which we need to consider in this connection is glauconite, a hydrated silicate of potassium and ferric iron. It is widely disseminated upon the sea bottom, but most abundantly in comparatively shallow waters and near the mud line surrounding continental shores—that is, it is formed "just beyond the limits of wave and current action, or, in other words, where the fine muddy particles commence to make up a considerable portion of the deposits."[a] It is developed principally in the interior of shells, but its mode of formation is obscure. Murray and Renard argue that after the death of the organism the shell first becomes filled with fine mud, upon which, in presence of the sulphates of sea water, the organic matter of the animal may act. The iron of the mud is reduced to sulphide, which afterward oxidizes to ferric hydroxide, alumina being at the same time removed in solution and colloidal silica set free. The latter, reacting upon the hydroxide, in presence of potassium salts derived from adjacent minerals, finally generates glauconite. This theory is supported by the observation that the glauconitic shells are always associated with the detritus of terrigenous rocks, containing orthoclase, muscovite, and other minerals from which the necessary potassium could be obtained. In a later portion

[a] Murray and Renard, Challenger Rept., Deep-sea deposits, p. 383, 1891.

of this work we shall have to examine the subject of glauconite more fully. An elaborate discussion of it would be out of place now.

Oceanic deposits, then, whether of shell, coral, red clay, manganese nodules, or glauconite, are in a sense the fossil records of chemical reactions which have taken place in the depths of the sea. They represent both additions to and withdrawals of matter from the waters of the ocean, with the formation of new substances by chemical change. Their study is complex and many of the conclusions drawn are uncertain, but the subject is one of great importance and interest and deserves more attention than it can be given here. For present needs this bare outline must suffice.[a]

POTASSIUM AND SULPHATES.

In seeking to balance the gains and losses of the ocean some account must be taken of potassium and of sulphates. The latter compounds occur in fresh and salt waters in nearly the same relative proportions, reckoned in percentages of anhydrous residue, as may be seen by comparing Murray's river average with Dittmar's mean composition of ocean salts. In the river salts SO_4 forms 8.22 per cent; in the sea 7.69. The figure for river water is not precise enough for any close comparison to be made, but the approximate equivalency is clear. From this relation we may infer that sulphates tend to accumulate in the ocean without great losses, although we have seen that under certain conditions they are reduced to sulphides by organic matter, a change which is counterbalanced by reoxidation under other circumstances. So far as the open sea is concerned, the precipitation of sulphates seems to be a matter of small magnitude, although they are found in all the clays and oozes in trivial proportions. In closed basins or lagoons the case is different, but examples of that kind are not in question now.

With potassium other conditions hold, and the two classes of waters are not at all alike. In river waters, on an average, the proportion of potassium is about one-third that of the sodium;[b] but in sea water it is only one-thirtieth. In the igneous rocks sodium and potassium are nearly equal; they pass unequally into the streams, and in the ocean the difference is still further increased. What becomes of the potassium?

---

[a] E. J. Jones (Jour. Asiatic Soc. Bengal, vol. 56, pt. 2, p. 209, 1887) has described another class of marine nodules. They were dredged up in 675 fathoms of water off Colombo, Ceylon, and contained about 75 per cent of barium sulphate.

[b] Many of the analyses of river water, as published, show no potassium, but this only means that they are incomplete. In such cases the alkalies were weighed together and in calculation the potassium was ignored. This is especially true of boiler-water analyses.

The answer to this question is simple. Hydrous silicates of aluminum, the clays, are able to take up considerable proportions of potassium and to remove its salts from solutions. According to J. M. van Bemmelen[a] ordinary soils will extract more potassium than sodium from solutions in which the salts of both metals are present. even where the sodium is in excess. Potassium, then, is removed from natural waters as they percolate through the soil or by the suspended silt carried by streams. The sodium is not so largely withdrawn, and therefore its relative proportion tends steadily to increase. One metal is deposited with the sediments, the other remains in solution.

These observations are confirmed in part by analyses of oceanic deposits, although the evidence is often incomplete. The larger number of analyses given for clay, mud, and ooze in the *Challenger* report contain no mention of alkalies, but when the latter are noted the potassium is commonly, not always, in excess.[b] In glauconite and phillipsite deposits potassium always predominates. L. Schmelck,[c] in his analyses of clays from the northern Atlantic, records no alkalies, but K. Natterer,[d] in sediments from the eastern Mediterrean and the Red Sea, found small quantities of potash and soda, and in nearly every instance potash was the more abundant of the two. In short, if the recorded analyses are correct the clays and oozes of the deep sea have been partly leached of their alkalies; but some of the potassium from the original volcanic material, with less sodium, has been retained in the production of zeolites. Nearer land potassium has been used in the formation of glauconite, and still nearer, when mechanical sediments appear, a similar discrimination is evident. Sodium dissolves, but potassium is held back.

THE CHLORINE OF SEA WATER.

It is not possible at present to trace all of the changes which take place in ocean water, nor to account with any certainty for the difference between sea salts and the material received from streams. In chemical character, fresh and salt water are opposites, as a brief inspection of the data will show. In ocean water, $Cl > SO_4 > CO_3$; in average river water, $CO_3 > SO_4 > Cl$. So also for the bases—in the first case, $Na > Mg > Ca$; in the other, $Ca > Mg > Na$—a complete reversal of the order. We can understand the accumulation of sodium in the ocean and some of the losses are accounted for, but the great

[a] Landw. Versuchs-Station., vol. 21, p. 135, 1877. The absorption of potassium has been established by the work of many investigators.

[b] This conclusion is confirmed by a recent and very complete analysis of the "red clay," conducted in the laboratory of the United States Geological Survey. These sediments will be considered more fully in another chapter.

[c] Den Norske Nordhavs-Expedition, pt. 9, p. 35, 1882.

[d] Monatsh. Chemie, vol. 14, p. 624, 1893; vol. 15, p. 530, 1894; vol. 20, p. 1, 1899.

excess of chlorine in sea water is not easily explained. In average river water sodium is largely in excess of chlorine; in the ocean the opposite is true, and we can not well avoid asking whence the halogen element was derived. Here we enter the field of speculation, and the evidence upon which we can base an opinion is scanty indeed.[a]

To the advocates of the nebular hypothesis the problem is comparatively simple. If our globe was formed by cooling from an incandescent mass, its primitive atmosphere and ocean must have been quite unlike the present envelopes, and we may fairly suppose that they contained large quantities of acid substances. Hydrochloric acid in the atmosphere would imply a solution of hydrochloric acid in the sea, which might in time be neutralized by the bases dissolved from rocks and poured by rivers into the common reservoir. This argument has been especially developed by T. Sterry Hunt,[b] who shows that, if his premises are sound, the primeval ocean must have been much richer in calcium and magnesium than the sea is to-day. The richness of some artesian waters of Canada in lime salts, waters which Hunt regards as fossil remainders from the early sea, may be cited in support of his views. On the other hand, R. A. Daly[c] has cited paleontological data in favor of the view that the pre-Cambrian ocean was nearly free from lime. The absence of fossils from rocks of an age immediately preceding a period rich in highly developed calcareous forms is taken as evidence that the earliest life was essentially shell-less and soft bodied, in consequence of a deficiency of lime salts in its environment. Hunt's views and Daly's are not necessarily antagonistic, for they relate to two distinct eras in oceanic evolution. From the earliest ocean, lime *might* have been precipitated, the loss being replenished after life appeared. Arguments of this kind are interesting, but by no means conclusive.

Another group of writers, seeking to avoid the nebular hypothesis, conceive the earth as having been built up by the slow aggregation of small, solid, and cold meteoric bodies.[d] Each of these, it is supposed, carried with it entangled or occluded atmospheric material. In course of time central heat was developed by pressure, and a partial expulsion of gas followed, thus forming an atmosphere derived from within. When the atmosphere became adequate to retain solar heat, and so to raise the surface temperature of the globe above the freezing point, the hydrosphere came into existence; but of its chemical nature at the beginning nothing, so far as I am aware, has been said by the

[a] On the ratio between sodium and chlorine in the salts carried by rivers to the sea, see E. Dubois, Proc. Sec. Sci., Amsterdam Acad., vol. 4, p. 388, 1902.

[b] Am. Jour. Sci., 2d ser., vol. 39, p. 176, 1865; and various papers in his Chemical and Geological Essays. See also J. Joly, on the geological age of the earth, in Trans. Roy. Dublin Soc., vol. 7, 2d ser., p. 23, 1899; and R. A. Taylor, Proc. Manchester Lit. Phil. Soc., vol. 50, p. ix, 1906.

[c] Am. Jour. Sci., 4th ser., vol. 23, p. 93, 1907.

[d] *See T. C. Chamberlin*, Jour. Geol., vol. 5, pp. 653 et seq., 1897; also H. L. Fairchild, *Am. Geologist, vol. 23, p. 94, 1899.*

advocates of this doctrine. There is, however, an analogy which may be utilized. Meteoric iron frequently incloses anhydrous ferrous chloride, or lawrenceite, a fact of which the curators of collections are painfully aware. The ferrous chloride deliquesces, the liquid formed then undergoes oxidation, ferric hydroxide is deposited, and acid solutions are developed which still further attack the iron. Through this process of corrosion certain meteoric irons have crumbled into masses of rust and disappeared as specimens from museums. If, now, the earth was formed from meteoric masses, some of them doubtless contained this annoying impurity, and chlorine from that source may have reached the primeval ocean. In fact, A. Daubrée[a] found lawrenceite in the terrestrial native iron from Ovifak. The planetesimal hypothesis is evidently not inconsistent with the excess of oceanic chlorine. It is also in harmony with the idea advanced by E. Suess,[b] that the ocean has received large accessions from volcanic sources. Hydrochloric acid and volatile chlorides exist in volcanic emanations and must, to some extent, reach the sea. If they were first derived from oceanic infiltration, they represent no gain to the ocean, and this question is still at issue. For present purposes it need not be discussed at greater length.

AGE OF THE OCEAN.

The facts that we can estimate, with a fair approach to exactness, the absolute amount of sodium in the sea, and that it is added in a presumably constant manner without serious losses, have led to various attempts toward using its quantity in geological statistics.[c] The sodium of the ocean seems to offer us a quantitative datum from which we can reason. For example, if we accept the figures given in Chapter I of this memoir for the relative abundance of the elements, it is easy to show that the sodium is only one-thirtieth of that contained in the average igneous rock of the 10-mile lithosphere. That is, if all the sodium in the sea were derived from the decomposition of igneous rocks, a shell of the latter one-third of a mile thick would supply the entire amount. An allowance for the sodium retained by the sedimentaries would increase this estimate to half a mile, which is the largest amount possible. All conceivable corrections tend to diminish the figure. A stratum of igneous rock, one-half mile thick and completely enveloping the globe, would furnish all the sodium of the ocean and the sediments. Joly,[d] by a similar process of reason-

[a] Études synthétiques de géologie expérimentale, p. 557, 1879.

[b] Geog. Jour., vol. 20, p. 520, 1902. See also C. Doelter, Sitzungsb. Akad. Wien, vol. 112, p. 704, 1903.

[c] This subject is considered more fully in Chapter I (pp. 28–29), but a little repetition seems to be desirable here.

[d] Trans. Roy. Dublin Soc., 2d ser., vol. 7, p. 23, 1899. See also a criticism of Joly by W. Mackie, *in Trans. Edinburgh Geol. Soc.*, vol. 8, p. 240, 1902. Mackie points out some *inadequacies in Joly's data.*

ing and in part from the same data, has sought to compute the geological age of the earth since erosion commenced. From Murray's estimate concerning the discharge of rivers Joly determines that 157,267,544 tons of sodium are annually poured into the sea. At this rate denudation of the land would require a period of from ninety to one hundred millions of years in order to make up the oceanic quantity of sodium. By applying certain corrections the figure is reduced to eighty or ninety millions of years as the time which has elapsed since water condensed upon the globe and aqueous denudation began.

It is not necessary to enter into the details of these and other similar calculations, for they can only be regarded as tentative and preliminary. They do, however, indicate certain possibilities and show how desirable it is that we should increase the accuracy of our data. When we know more precisely what chemical work is being done by the rivers, with annual averages for all of the greater continental streams, we may have materials for something like a fair measure of geological time. Our present knowledge on this subject is too incomplete and too unsatisfactory. Some of the difficulties attending the problem were pointed out in the preceding chapter.

THE DISSOLVED GASES.

Up to this point we have considered only the saline matter of the ocean; but the dissolved gases are almost equally important and have been the subject of exhaustive investigations. The earlier researches were not altogether satisfactory, and we need therefore examine only the more recent data, first as to the air and then as to the carbonic acid of sea water.

The solubility of a gas in water varies with its nature and with the temperature, being greatest in the cold and diminishing as the solvent becomes warmer. The Arctic Ocean, therefore, dissolves more air than the waters of tropical regions, and it also seems to carry a greater proportion of oxygen. We have already seen, in studying the atmosphere, that water exercises a selective function in the solution of air, so that the dissolved gaseous mixture is enriched in oxygen. Ordinary air contains by volume only about one part in five of oxygen; dissolved air contains, roughly, one part in three; although, as we shall see, the proportion changes as conditions vary. Even the salinity of the ocean must probably be taken into account, for the reason that some if not all gases are less soluble in salt than in fresh water. According to the recent experiments by F. Clowes and J. W. H. Biggs,[a] salt water dissolves only 82.9 per cent as much oxygen as is absorbed by fresh water. So large a difference can not well be ignored.

[a] Jour. Soc. Chem. Ind., vol. 23, p. 358, 1904.

To illustrate the difference in solubility between the two principal atmospheric gases, we may use the data given by O. Pettersson and K. Sondén.[a] In pure water the gases dissolve unequally, and the following table shows their solubility throughout a fair range of atmospheric temperatures. The figures represent the number of cubic centimeters of each gas, at 760 millimeters pressure, required to saturate 1 liter of water; and the last column gives the percentage of oxygen in the dissolved mixture, when N+O=100.

Solubility of nitrogen and oxygen in water at various temperatures.

Temperature.	Nitrogen absorbed.	Oxygen absorbed.	Percentage of oxygen.
	cm³.	*cm³.*	
0	19.53	10.01	33.88
6.00	16.34	8.28	33.60
6.32	16.60	8.39	33.55
9.18	15.58	7.90	33.60
13.70	14.16	7.14	33.51
14.10	14.16	7.05	33.24

When we recall the fact that ordinary air contains only 21 per cent of oxygen, the magnitude of the change produced by solution becomes manifest.

In sea water the same relation holds approximately, but the enrichment is slightly greater. H. Tornoe,[b] assisted by S. Svendsen, made 94 analyses of air extracted from the water of the North Atlantic and found the oxygen in the mixture N+O to range from a minimum of 31.0 to a maximum of 36.7 per cent. Between 70° and 80° latitude the average was 35.64 per cent; below 70° it was 34.96. At the surface the mean percentage of oxygen was 35.3, and it diminished with the depth from which the samples were taken down to 300 fathoms, when the proportion was reduced to 32.5. Below 300 fathoms the percentage of oxygen was nearly constant. O. Jacobsen,[c] analyzing dissolved air from the water of the North Sea, obtained a range of 25.20 to 34.46 per cent, the surface average being 33.95.

Still more elaborate are the data published by W. Dittmar,[d] whose samples of dissolved air came from many points in the Atlantic, Pacific, Indian, and Antarctic oceans. The maximum amount was found in the Antarctic—28.58 cubic centimeters of air to the liter of water, containing 35.01 per cent of oxygen. The minimum, 13.73

[a] Ber. Deutsch. chem. Gesell., vol. 22, p. 1439, 1889. See also R. W. Bunsen, Gasometrische Methoden; W. Dittmar, in his *Challenger report;* and A. Hamberg, Bihang K. Svensk. Vet.-Akad. Handl., vol. 10, No. 13, 1884.

[b] Den Norske Nordhavs-Expedition, Chemistry, pp. 1–23, 1880. Tornoe in this memoir gives a good summary of the earlier investigations.

[c] Die Ergebnisse der Untersuchungsfahrten S. M. Knbt. Drache, Berlin, 1886. An earlier memoir by Jacobsen is printed in Liebig's Annalen, vol. 167, pp. 1 et seq., 1873.

[d] Challenger rept., Physics and chemistry, vol. 1, 1884. For the table cited below, see p. 224. Also for a summary of the results obtained, see the "Narrative" of the expedition.

cubic centimeters and 33.11 per cent, was obtained at a point southeast of the Philippine Islands. The general conclusions as to the solubility of nitrogen and oxygen in sea water at different temperatures appear in the following table:

Solubility of nitrogen and oxygen in sea water at various temperatures.

Temperature.	Dissolved nitrogen.[a]	Dissolved oxygen.[a]	Percentage of oxygen.
0	15.60	8.18	34.40
5	13.86	7.22	34.24
10	12.47	6.45	34.09
15	11.34	5.83	33.93
20	10.41	5.31	33.78
25	9.62	4.87	33.62
30	8.94	4.50	33.47
35	8.36	4.17	33.31

[a] Supposed to be measured dry, at 0° C. and 760 millimeters pressure; in other words, the normal volumes in cubic centimeters in 1 liter of sea water at the given temperatures. The "nitrogen" of course includes argon.

No argument is needed to show the importance of the facts thus developed. The dissolved oxygen plays a double part in the activities of the ocean—first in maintaining the life of marine organisms, and secondly in oxidizing dead matter of organic origin. By the latter process carbon dioxide is generated, and that compound, as we have already seen, helps to hold calcium carbonate in solution. Its other function as a possible regulator of climate will be considered presently.

Free or half-combined [a] carbonic acid is received by the ocean from various sources. It may be absorbed directly from the atmosphere or brought down in rain; it enters the sea dissolved in river water; it is derived from decaying organic matter, and submarine volcanic springs contribute a part of the supply. The free gas is also liberated from bicarbonates by the action of coral and shell building animals, which assimilate the normal calcium salt. Carbonic acid is continually added to the ocean and continually lost, either to the atmosphere again or in the maintenance of marine plants, and we can not say how nearly the balance between accretions and losses may be preserved. The equilibrium is probably far from perfect; it may be disturbed by changes in temperature or by the agitation of waves, and every variation in it leads to important consequences. It is estimated that the ocean contains from eighteen to twenty-seven times as much carbon dioxide as the atmosphere, and that it is therefore, as T. Schloesing [b] has pointed out, the great regulative reservoir of the gas.

Nearly all of the authorities thus far quoted with reference to the dissolved air of sea water have also studied the omnipresent carbonic

[a] A much used but inexact expression. It describes the second molecule of carbonic acid which converts the normal salts into bicarbonates.

[b] *Compt. Rend.*, vol. 90, p. 1410, 1880. See also A. Krogh, Meddelelser om Groenland, *vol. 26, pp. 333, 409, 1904.*

acid. Jacobsen, Hamberg, Tornoe, Buchanan, Dittmar, Natterer, and others have made numerous determinations of its amount, and as a general rule the quantities found were insufficient to transform all of the normal calcium carbonate into the acid salt. Tornoe, as the average of 78 sea-water analyses, found 52.78 milligrams to the liter of fully combined carbon dioxide, and in addition 43.64 milligrams available for the formation of bicarbonates. Results of the same order were obtained by Natterer in his examination of waters from the Mediterranean. Normal carbonate and bicarbonate are both present in sea water, although in a few exceptional determinations during the *Challenger* expedition the carbonic acid was clearly in excess. Such instances, however, are rare, and are ascribable to purely local and unusual conditions.

The carbonic-acid determinations of the *Challenger* voyage were conducted partly by J. Y. Buchanan on shipboard, and partly by W. Dittmar on land.[a] The combined acid has already been accounted for in the analyses given for sea salts; the "loose," free, or half-combined acid, is more variable. Its average amount, in milligrams to the liter, at different temperatures appears in the following table:

Average amount of free carbonic acid in sea water at various temperatures.

[Milligrams per liter.]

Temperature:		Temperature:	
25 to 28.7	35.88	10 to 15	43.50
20 to 25	37.18	5 to 10	47.21
15 to 20	42.68	—1.4 to +3.2	53.31

That is, the ocean contains less free carbonic acid in warm than in cold latitudes. Its average quantity is estimated by Murray at 45 milligrams per liter, which is equivalent to a layer of carbon 3.45 centimeters thick over the entire oceanic area. For different depths of water the variations in carbonic acid are less pronounced, as may be seen from the subjoined averages:

Average amount of free carbonic acid in sea water at various depths.

[Milligrams per liter.]

Surface	42.6	300 fathoms	44.0
25 fathoms	33.7	400 fathoms	41.1
50 fathoms	48.8	800 fathoms	42.2
100 fathoms	43.6	More than 800 fathoms	44.6
200 fathoms	44.6	Bottom	47.4

[a] See vol. 1 of the report on physics and chemistry and part 2 of the "Narrative," p. 979; also J. Y. Buchanan, in Proc. Roy. Soc., vol. 22, pp. 192, 483, 1874. The tables cited are from the "Narrative."

The figures are derived from 195 determinations by Buchanan, and the individual numbers range from 19.3 to 96 milligrams to the liter. In 15 determinations the carbonic acid was in excess of the amount necessary to form bicarbonates; in only 22 was it sufficient to fully convert the normal into the acid salt.

In the light of the evidence just presented, and speaking from the point of view of the modern theory of solutions, we may say that the water of the ocean contains not only the normal carbonic ions, CO_3, but also a considerable proportion of the bicarbonic ions, HCO_3. The latter ions are unstable, and their existence is conditional on temperature, so that although they are continually forming, they are as continually being decomposed. That is, between the ocean and the atmosphere there is an interchange of carbonic acid, which is released from the water in warm climates and absorbed again in the cold. The atmospheric supply of carbon dioxide is thus alternately enriched and impoverished, and the conditions affecting equilibrium are of several kinds. This problem has been elaborately discussed by C. F. Tolman, jr.,[a] from the standpoint of the physical chemist, and his memoir should be consulted for the detailed argument. The essential features of the evidence upon which a theoretical discussion can be based are already before us. We have considered the oceanic losses and gains of carbon dioxide, and it remains to correlate them with the corresponding changes in the atmosphere. This can not be done quantitatively, for the rates of consumption and supply are not measurable. In particular, the carbon dioxide from volcanoes and volcanic springs is not a determinable quantity. Certain large factors in the problem are, however, recognizable, and we can trace to some degree their influence upon climate.

That the surface of the earth has been subjected to climatic alternations, to glacial periods and epochs of greater warmth, is a commonplace of geology. To account for such changes, various astronomical and physical theories have been proposed, and with these, of course, chemistry has nothing to do. Whether, for example, the solar constant of radiation is really a constant or not is a question which the chemist can not attempt to answer. The chemical portion of the problem is all that concerns us now; and that relates to the variable carbonation of the atmosphere.

The researches of Arrhenius on the climatic significance of carbon dioxide were cited in a previous chapter, and we then saw that its variation in the atmosphere might be attributed to fluctuating volcanic activity. A varying supply of the gas was postulated, and its influence on atmospheric temperatures was shown to offer a possible explanation of alternating climates. A variable consumption of

[a] Jour. Geol., vol. 7, p. 585, 1899.

carbon dioxide would obviously produce much the same effect, and it is therefore evident that supply and loss must be considered together. This has been done by T. C. Chamberlin in an interesting series of papers,[a] in which the ocean is represented as a prime agent in producing the observed changes. The supplies are drawn from the storehouse of the ocean, they are consumed in the decomposition of silicates on land, and they are regenerated by the action of lime-secreting animals, which set carbonic acid free, as well as by changes in temperature.

According to Chamberlin, an important factor in climatic variation is the fluctuating elevation of the land. During periods of maximum elevation, when the largest land surfaces are exposed to atmospheric action, the consumption of carbon dioxide in rock weathering is great and the air becomes impoverished. When depression occurs and the oceanic area enlarges, a smaller quantity of silicates is decomposed and less carbonic acid disappears. The first change produces a lowering of temperature, which is increased by the consequent greater absorbability of carbon dioxide in sea water; the second causes a relative rise, intensified by a release of the gas from solution. Enlargement of land area implies a low temperature, whereas a decrease is conducive to warmth, both conditions hinging on the variability produced in the atmospheric supply of carbonic acid and its effectiveness as a retainer of solar radiations.

But this is not all of the story. A depression of the land is accompanied by an increased area of shoal water in which lime-secreting organisms can flourish, and they liberate carbon dioxide from bicarbonates. A period of limestone formation is therefore correlated with an enrichment of the atmosphere, and consequently with the maintenance of a mild climate. The ocean is the great reservoir of carbonic acid, and upon its exchanges with the atmosphere the variations of climate seem partly to depend. This argument does not exclude consideration of the volcanic side of the problem, but the oceanic factor seems to be the larger of the two. That the carbon dioxide of the ocean and the atmosphere plays an important part in regulating climates is apparently beyond doubt.

INFLUENCE OF LIVING ORGANISMS ON THE OCEAN.

One other important factor in marine chemistry remains to be considered—namely, the influence of living organisms. These, both plants and animals, are almost incredibly abundant in the ocean.[b]

[a] Jour. Geol., vol. 5, p. 653, 1897; vol. 6, pp. 459, 609, 1898; vol. 7, pp. 545, 667, 751, 1899. Chamberlin's views are criticised by A. Krogh in Meddelelser om Groenland, vol. 26, pp. 333, 409, 1904.

[b] The abundance of life in the ocean is admirably stated by W. K. Brooks, in Jour. Geol., vol. 2, p. 455, 1894. Its chemical significance can hardly be exaggerated.

and their vital processes play a great part in its chemical activities. This fact has already been noted on what might be called its inorganic side—that is, with reference to the function of marine organisms in secreting phosphate and carbonate of lime. Coral reefs and the submarine oozes are made up of animal remains, calcareous or siliceous, and their aggregate amount is something enormous.

The living animals, however, do much more than to secrete inorganic material. In developing they absorb large quantities of carbon, hydrogen, nitrogen, and oxygen, the principal constituents of their soft tissues. These elements, in one form of combination or another, are released again by decomposition after the organism dies, and they are also eliminated to a certain extent by the vital processes of the living creatures. Where life is abundant there carbon dioxide is abundant also, and its activity as a solvent of calcium carbonate is greatest.[a] The relations of the ocean to carbon dioxide can not be completely studied without taking into account both plant and animal life.

When marine animals die they may become food for others, the scavengers of the sea, or they may simply decompose. The latter fate, obviously, most often befalls creatures whose soft parts are protected by hard shells. Water, carbon dioxide, and ammoniacal salts are the chief products of decomposition, and ammonium carbonate, thus formed, acts as a precipitant of calcium compounds.[b] The calcium carbonate thus thrown down is in a finely divided condition, and therefore peculiarly available for absorption by coral and shell builders. The ammonium salts also, as shown by Murray and Irvine, are food for the marine flora, and on that some portions of the fauna subsist.

But this is not all. Decomposing organic matter reduces the sulphates of sea water to sulphides, which by reaction with carbonic acid yield sulphureted hydrogen. This process, as shown by Murray and Irvine,[c] is particularly effective in bottom waters in contact with "blue mud," and by it local changes are produced in the composition of the waters themselves. Bacteria also assist in the process, and according to N. Androussof,[d] this H_2S fermentation is especially conspicuous in the Black Sea. Some of the hydrogen sulphide passes into the atmosphere and is lost to the ocean; some of it reacts upon the iron silicates of the sea floor, to form pyrite or

---

[a] See W. L. Carpenter in C. Wyville Thomson's Depths of the Sea, pp. 502–511, 1874. Where CO_2 was abundant in bottom waters, the dredge brought up a good haul of living forms. Where it was deficient, the hauls were poor.

[b] See J. Murray and R. Irvine, Proc. Roy. Soc. Edinburgh, vol. 17, p. 89, 1889.

[c] Trans. Roy. Soc. Edinburgh, vol. 37, p. 481, 1895. See also Challenger Rept., Deep-sea deposits, p. 254, 1891; W. N. Hartley, Proc. Roy. Soc. Edinburgh, vol. 21, p. 25, 1897; and Murray and Irvine, idem., p. 35.

[d] *Guide* des excursions du VII. Cong. géol. internat., No. 29.

marcasite; and some is reoxidized to produce sulphates again. From all of these considerations we see that the biochemistry of the ocean is curiously complex, and that its processes are conducted upon an enormous scale. The magnitude of their influence can not be expressed in any quantitative terms, and must long remain an unmeasured factor in marine statistics. In all probability the circulation and distribution of carbon in the ocean is as much influenced by living beings as by exchanges between the sea and the atmosphere.

CHAPTER V.

THE WATERS OF CLOSED BASINS.

PRELIMINARY STATEMENT.

In dealing with the ocean and its tributary rivers we have studied the hydrosphere in its larger sense, the waters all forming part of one great system of circulation which can be treated as a unit. But on all the continents there are isolated areas from which the drainage never reaches the sea. Streams originate in the higher portions of such areas, resembling in all respects those tributary to the ocean. Their waters gather in depressions and, ultimately, by the concentration of their saline constituents form salt or alkaline lakes or even dry beds of solid residues. The latter condition is developed in small areas of great aridity, where evaporation is so rapid that no large body of water can accumulate; but the more important closed basins are characterized by the formation of permanent reservoirs. such as the Caspian, the Great Salt Lake, and the Dead Sea. Each basin exhibits individual peculiarities of more or less local origin, and therefore each one must be studied separately. No such uniformity as that shown by the ocean is manifested here, although in some lakes we can recognize a curious approximation in chemical character to that of the open sea.

THE BONNEVILLE BASIN.

To American students the most accessible and therefore the most interesting of these isolated regions is that known as " the Great Basin " in the western part of the United States. This area is fully described in two monographs of the United States Geological Survey,[a] in which it is represented as having been formerly the seat of two great lakes, Bonneville and Lahontan, of which only the remnants now exist. The Great Salt Lake of Utah is the chief remainder of Lake Bonneville and, with its accessory waters, may well occupy our attention first.

The water of Great Salt Lake has been repeatedly analyzed—on the whole with fairly concordant results, except in regard to salinity. The latter varies with changes in the level of the lake, but is always

[a] G. K. Gilbert, Lake Bonneville: Mon. 1, 1890. I. C. Russell, The geological history *of Lake Lahontan, Mon. XI*, 1885.

several times greater than that of sea water. An early, incomplete analysis by L. D. Gale and a questionable one by H. Bassett are hardly worth reproducing.[a] The other available data, expressed in percentages of total salts, are as follows:

Analyses of water from Great Salt Lake.

A. By O. D. Allen,[a] Rept. U. S. Geol. Explor. 40th Par., vol. 2, p. 433, 1877. Water collected in 1869. A trace of boric acid is also reported, in addition to the substances named in the table.

B. By Charles Smart. Cited in Resources and Attractions of the Territory of Utah, Omaha, 1879. Analysis made in 1877.

C. By E. von Cochenhausen, for C. Ochsenius,[b] Zeitschr. Deutsch. geol. Gesell., vol. 34, p. 359, 1882. Sample collected by Ochsenius April 16, 1879.

D. By J. F. Talmage, Science, vol. 14, p. 445, 1889. Collected in 1885.

E. By Talmage, loc. cit. Collected in 1889.

F. By E. Waller, School of Mines Quart., vol. 14, p. 57, 1892. Waller also reports a trace of boric acid.

G. Dittmar's average composition of sea salts, inserted here for ease of comparison.

	A.	B.	C.	D.	E.	F.	G.
Cl	55.99	56.21	55.57	54.38	56.54	55.69	55.292
Br	trace	.....	.....	.....	.....	trace	.188
SO_4	6.57	6.89	6.86	7.76	5.97	6.52	7.692
CO_3	.....	.07	.....	.....	.....	.....	.207
Li	trace	.....	.....	.....	.....	.01	.....
Na	33.15	33.45	33.17	34.71	33.39	32.92	30.593
K	1.60	(?)	1.59	1.19	1.08	1.70	1.106
Ca	.17	.20	.21	.26	.42	1.05	1.197
Mg	2.52	3.18	2.60	1.70	2.60	2.10	3.725
Fe_2O_3, Al_2O_3, SiO_2	.....	.....	.....	.....	.....	.01	.....
	100.00	100.00	100.00	100.00	100.00	100.00	100.000
Salinity, per cent	14.994	13.790	15.671	16.716	19.558	[c] 23.036	3.5

[a] Allen also gives analyses of a saline soil from a mud flat near Great Salt Lake. It contained 16.40 per cent of soluble matter much like that of the lake water.

[b] Ochsenius also gives an analysis of the salt manufactured from the water of Great Salt Lake.

[c] More correctly, 230.355 grams per liter.

Although the salinity of the lake is from four to seven times as great as that of the ocean, its saline matter has very nearly the same composition. The absence of carbonates, the higher sodium, and the lower magnesium are the most definite variations from the oceanic standard; but the general similarity, the identity of type, is unmistakable. Gilbert estimates the quantity of sodium chloride contained in the lake at about 400 millions and the sulphate at 30 millions of tons.

For the waters tributary to Great Salt Lake, many analyses are available.[b] The following table relates to some of the streams, except that Sevier Lake, an outlying remnant of Lake Bonneville, is

[a] They are cited in Gilbert's monograph. Bassett's analysis is exceedingly high in potassium.

[b] In addition to the data given here, see analyses by J. T. Kingsbury, of City, Red Butte, Farmington, Emigration, Parleys, Big Cottonwood, and Little Cottonwood creeks, cited by G. B. Richardson in Water-Sup. and Irr. Paper No. 157, U. S. Geol. Survey, p. 30, 1906; analyses made in 1882 and 1884. Field Operations Bureau of Soils, U. S. Dept. Agric., 1903, p. 1138, contains analyses of Provo River, Spanish Fork, American Fork, and Dry, Payson, Santaquin, Currant, and Warm creeks, but the analyst is not named.

included as a matter of convenience. The analyses are all reduced to standard form, with bicarbonate radicles recalculated to normal CO_3. Salinity is stated in parts per million:

Analyses of waters tributary to Great Salt Lake.

A. Bear River at Evanston, Wyoming. Analysis by F. W. Clarke, Bull. U. S. Geol. Survey No. 9, p. 30, 1884.

B. Bear River at Corinne, Utah, near its mouth. Analysis received from the Southern Pacific Railroad.

C. Jordan River at intake of Utah and Salt Lake canal. Analysis by F. K. Cameron, Rept. No. 64, Bureau of Soils, U. S. Dept. Agric., p. 108, 1900.

D. Jordan River near Salt Lake City. Analysis by Cameron, loc. cit.

E. City Creek, Utah. Analysis by T. M. Chatard, Bull. U. S. Geol. Survey No. 9, p. 29, 1884.

F. Ogden River at Ogden, Utah.

G. Weber River at mouth of canyon. Analyses F and G made under the direction of F. K. Cameron, Field Operations Div. Soils, U. S. Dept. Agric., 1900, p. 226.

H. Sevier Lake. Analysis by Oscar Loew. Rept. Geog. Surv. W. 100th Mer., vol. 3, p. 114, 1875. Sample taken in 1872.

	A.	B.	C.	D.	E.	F.	G.	H.
Cl	2.68	32.36	35.54	34.76	5.38	23.21	13.73	52.66
SO_4	5.76	8.16	26.54	30.68	2.87	5.65	9.25	10.88
CO_3	52.68	21.53	2.67	trace	52.57	33.68	40.00	.....
Na	} 4.49	} 20.54	} 26.13	} 23.04	} 3.74	11.31	8.37	33.33
K						4.16	4.19	.....
Ca	23.69	10.12	7.59	10.26	24.19	16.05	18.19	.12
Mg	6.86	4.76	1.53	1.26	7.15	5.94	6.27	3.01
SiO_2	3.84	.....	.....	.....	3.69	.....	.....	.....
$(AlFe)_2O_3$	.....	2.53	.....	.....	.41	.....	.....	.....
	100.00	100.00	100.00	100.00	100.00	100.00	100.00	100.00
Salinity, parts per million	185	637	892	1,090	243	444	455	86,400

Utah Lake, at the head of the Jordan River, has furnished material for a most instructive series of analyses, as follows:

Analyses of water from Utah Lake.

A. By F. W. Clarke, Bull. U. S. Geol. Survey No. 9, p. 20, 1884.

B. By F. K. Cameron, 1899.

C. By B. E. Brown 1903.

D. Mean of three analyses by A. Seidell, 1904. Samples taken in May.

E. By B. E. Brown, 1904. Collected August 31. For analyses B, C, D, and E, see F. K. Cameron, Jour. Am. Chem. Soc., vol. 27, p. 113, 1905. All are here reduced to terms of normal carbonates.

	A.	B.	C.	D.	E.
Cl	4.04	35.48	26.23	24.75	26.87
SO_4	42.68	26.53	28.49	28.25	30.14
CO_3	19.88	2.66	10.23	12.35	8.48
Li	.....	.....	.....	.06	.....
Na	} 5.81	} 26.20	19.28	18.19	18.34
K			2.34	2.17	1.75
Ca	18.24	7.58	6.25	5.90	5.34
Sr	.....	.....	.....	.15	.....
Mg	6.08	1.55	7.18	6.18	6.85
SiO_2	3.27	.....	.....	2.00	2.23
	100.00	100.00	100.00	100.00	100.00
Salinity, parts per million	306	892	1,281	1,165	1,254

Although the foregoing analyses are, in one respect or another, incomplete, they tell an intelligible story. Bear River at Evanston is a normal river water, which upon evaporation would yield mainly calcium carbonate, and so, too, is City Creek. Bear River, near its mouth, has changed its character almost completely and has evidently taken up large quantities of sodium chloride from the soil. Utah Lake, in the twenty years intervening between the earliest and latest analyses, has undergone a thorough transformation, and its salinity has more than quadrupled. From a fresh water of the sulphate type it has become distinctly saline, and this change is probably a result of irrigation. Its natural supplies of water have been diverted into irrigating ditches, and at the same time salts have been leached out from the soil and washed into the lake. To some extent these salts have been brought to the surface as a result of cultivation, so much so that considerable areas of land bordering upon the lake have ceased to be available for agriculture. Its outlet, the Jordan River, exhibits the same peculiarities. As for Sevier Lake, which is now reduced to a mere pool in consequence of irrigation along its sources, its water resembles that of Great Salt Lake, except that at the time the analysis was made it was only about half as saline.

All of the waters tributary to Great Salt Lake, so far as they have been examined, contain notable quantities of carbonates, which are absent from the lake itself. These salts have evidently been precipitated from solution, and evidence of this process is found in beds of oolitic sand, composed mainly of calcium carbonate, which exist at various points along the lake shore.[a] The strong brine of the lake seems to be incapable of holding calcium carbonate in solution.

THE LAHONTAN BASIN.

The Quaternary Lake Lahontan, which once covered an area of 8,400 square miles in northwestern Nevada, is now represented by a number of relatively small, scattered sheets of water and many alkaline or saline beds. Instead of one large basin there are now several basins, and each one is fed by independent sources of fresh water. Each lake, therefore, has its own individual peculiarities, as the various analyses show. Some of the lakes exist only during the humid season, when large areas are covered by a thin layer of water; others are permanent sheets of considerable depth. Our data relate only to the latter, with their sources of supply.

In the statement of some analyses precision, in a certain sense, has been sacrificed to uniformity. In strongly alkaline waters the radicle SiO_3 may possibly exist instead of the colloidal SiO_2. In no case,

[a] See analyses by R. W. Woodward, cited in Rept. U. S. Geol. Explor. 40th Par., vol. 2, p. 435, 1877. Also an analysis by T. M. Chatard, in Bull. U. S. Geol. Survey No. 228, p. 331, 1904.

however, is the silica high enough to cause a serious error in this respect, and a fraction of 1 per cent will cover the uncertainty. A graver criticism might be based upon the representation of all the carbonates as normal, for bicarbonates are undoubtedly present in some of the waters, which on evaporation deposit trona in large quantities. If, however, we regard the analyses as representing the percentage composition of ignited residues, the suggested objection no longer holds. We can compare our data upon the uniform basis adopted hitherto, and leave the question of bicarbonates for separate consideration later. The divergent character of the analyses seems to render some such procedure necessary. It is only by eliminating variables that we can secure comparable results.

In the next table two groups of analyses appear. Lake Tahoe, a typical mountain lake of great purity, empties through the Truckee River, which terminates in Winnemucca and Pyramid lakes. These waters are included in the first group. The second comprises the Walker River and Walker Lake. The individual analyses, which, except when otherwise stated, are recalculated from the laboratory records of the Survey, are as follows:

Analyses of Lahontan waters—I.

A. Lake Tahoe, California. Analysis by F. W. Clarke.
B. Truckee River, Nevada. Mean of two concordant "boiler-water analyses" received from the Southern Pacific Railroad.
C. Pyramid Lake, Nevada. Mean of four concordant analyses by Clarke.
D. Winnemucca Lake, Nevada. Analysis by Clarke.
E. Walker River, Nevada. Analysis by Clarke.
F. Walker Lake, Nevada. Mean of two analyses by Clarke. For analyses A, C, D, E, and F, see Bull. U. S. Geol. Survey No. 9, 1884.

	A.	B.	C.	D.	E.	F.
Cl	3.18	7.59	41.04	47.88	7.50	23.77
SO_4	7.47	12.87	5.25	3.76	16.14	21.29
CO_3	38.73	33.30	14.28	7.93	30.34	17.34
Na	10.10	17.26	33.84	36.68	18.07	34.83
K	4.56		2.11	1.94		
Ca	12.86	11.02	.25	.55	12.96	.90
Mg	4.15	3.49	2.28	.49	2.21	1.56
SiO_2	18.95	14.47	.95	.77	12.78	.31
$(AlFe)_2O_3$	.....		.....	.....	.....	.....
	100.00	100.00	100.00	100.00	100.00	100.00
Salinity parts per million	73	153	3,486	3,602	180	2,500

The changes shown by these waters[a] are elaborately discussed by Russell in his work on Lake Lahontan. Ordinary fresh waters rich in carbonates and in calcium are concentrated, and the lime salts are finally thrown out in the form of tufa. The tufa, however, instead of being an oolitic or granular deposit, as in the Bonneville basin, is in the form of crystals, "thinolite," pseudomorphous after some un-

[a] Excepting analysis B, which is more recent.

known mineral, which may have been a calcium chloro-carbonate. This peculiar variety of tufa is characteristic of the Lahontan basin; but the mode of its formation is uncertain.[a]

Four more analyses of Lahontan waters remain to be considered, as follows:

Analyses of Lahontan waters—II.

G. Humboldt River, Nevada. Analysis by T. M. Chatard.

H. Humboldt Lake, Nevada. Analysis by O. D. Allen. Rept. U. S. Geol. Explor. 40th Par., vol. 2, p. 743, 1877.

I. The large Soda Lake, Ragtown, Nevada. Surface sample. Analysis by Chatard.

J. The large Soda Lake, sample from a depth of 30.5 meters. Analysis by Chatard. For these analyses of Chatard's see Bull. U. S. Geol. Survey No. 9, 1884. An earlier analysis of Soda Lake by O. D. Allen is given in the Fortieth Parallel report, vol. 2, p. 748, 1877. It is less complete than Chatard's, but otherwise not very different. This water contains bicarbonates. Specific gravity, 1.101.

	G.	H.	I.	J.
Cl	2.19	31.82	36.51	35.38
SO_4	13.92	3.27	10.36	10.50
CO_3	39.55	21.57	13.78	15.89
PO_4	.....	.07	.....	.....
B_4O_7	.....	.....	.25	.26
Na	13.63	29.97	36.63	35.38
K	2.92	6.54	2.01	2.13
Ca	14.28	1.35	.....	.....
Mg	3.62	1.88	.22	.21
SiO_2	9.51	3.53	.24	.25
Al_2O_3	.38	.....	.....	.....
	100.00	100.00	100.00	100.00
Salinity, parts per million	361	929	113,700	113,700

The first two of these analyses show the change from river to lake water very clearly. There is a concentration of chlorides and a relative loss in silica, magnesium, and calcium. The water of Soda Lake is more than three times as concentrated as sea water, and of an entirely different type. It has no visible supply of water except from springs near its margin, and at certain times it deposits trona and also gaylussite in notable quantities. Gaylussite is a carbonate of calcium and sodium, but no calcium is shown by Chatard's analyses. It must, therefore, be deposited by the lake about as rapidly as it is received. The tributary springs have not been investigated.

The Lahontan waters, then, are distinctly alkaline, whereas the lakes of the Bonneville basin are salt. The cause of the difference must be sought in the sources from which the waters are derived, and one distinction is clear. Great Salt Lake is fed by streams and springs which flow in great part through sedimentary formations. Its saline matter is a concentration of old salts which were laid down

[a] See discussion by E. S. Dana, in Bull. U. S. Geol. Survey No. 12, 1884. Calcite pseudomorphs, similar to thinolite and called pseudogaylussite, have been discussed by F. J. P. van Calker (Zeitschr. Kryst. Min., vol. 28, p. 556, 1897) and C. O. Trechmann (idem, vol. 35, p. 283, 1902). The Australian glendonite is calcite pseudomorphous after glauberite, and sometimes forms crystals 15 to 20 inches long. See T. W. E. David, Rec. Geol. Survey New South Wales, vol. 8, p. 162, 1905.

long ago. The Lahontan lakes, on the other hand, are supplied with water from areas of igneous rocks, in which rhyolites and andesites are especially abundant and from which the alkalies may be obtained. They represent, therefore, a primary concentration of leached material, as contrasted with the secondary origin of the Bonneville brine. The difference is easily recognized, but it does not explain all of the phenomena. To account for the large amounts of chlorine in the waters, particularly in that of Great Salt Lake, is not so easy a matter. So far as I am aware, no plausible solution of the latter problem has yet been suggested. The cosmological speculations, which help us in the case of the ocean, hardly seem to be applicable here.

LAKES OF CALIFORNIA.

In California there are a number of alkaline lakes having a general resemblance to those of the Lahontan basin. The subjoined analyses are available, and in them, as usual, bicarbonates, if reported, have been reduced to normal form.

Analyses of water from alkaline lakes in California.

A. Mono Lake.[a] Analysis by T. M. Chatard, Bull. U. S. Geol. Survey No. 60, p. 53, 1890. Sample taken in 1882. Specific gravity, 1.045.

B. Owens Lake. Analysis by O. Loew, Ann. Rept. Geog. Surv. W. 100th Mer., 1876, p. 190. Specific gravity, 1.051.

C. Owens Lake. Analysis by Chatard, op. cit., p. 58. Specific gravity, 1.062.

D. Owens Lake. Analysis by C. H. Stone, cited by W. T. Lee in Water-Sup. and Irr. Paper No. 181, U. S. Geol. Survey, p. 22, 1906. Sample taken in August, 1905.

E. Black Lake, near Benton, Mono County. Analysis by Loew, op. cit., p. 191.

F. Tulare Lake in 1880.

G. Tulare Lake in 1889. Analyses F and G by E. W. Hilgard, Appendix to Rept. Univ. California Exper. Sta., 1900. This lake has an outlet during floods, but not at other times.

H. Borax Lake. Analysis by W. H. Melville, published by G. F. Becker in Mon. U. S. Geol. Survey, vol. 13, p. 265, 1888. In addition to the substances named in the table, the original residue contained 4.5 per cent of organic matter.

	A.	B.	C.	D.	E.	F.	G.	H.
Cl	23.34	22.22	25.67	24.82	7.68	17.38	20.26	32.27
Br	.....	.....	.....	.....	trace	.....	.....	.04
I	.....	.....	.....	.....	trace	.....	.....	.....
SO_4	12.86	15.47	9.95	9.93	13.24	16.91	20.77	.13
CO_3	23.42	21.72	23.51	24.55	37.73	26.55	19.55	22.47
PO_4	.....	trace	.....	.11	trace	.....	.....	.02
B_4O_7	.32	trace	.48	.14	trace	.....	.....	5.05
NO_3	.....	trace	.....	.45	.....	.....	.....	.....
Li	.....	trace	.....	.03	trace	.....	.....	.....
Na	37.93	35.78	37.83	38.09	39.05	33.51	35.79	38.10
K	1.85	4.54	2.18	1.62	2.03	1.82	2.44	1.52
Rb, Cs	.....	.....	.....	traces	.....	.....	.....	.....
Ca	.04	trace	.02	.02	.....	1.50	.28	.03
Mg	.10	trace	.01	.01	.....	1.78	.26	.35
SiO_2	.14	.27	.29	.14	.27	.55	.65	.01
Al_2O_3	trace	trace	.04	.04	.....	.....	.....	.01
Fe_2O_3	trace	.....	.02		.....	.....	.....	
Mn_2O_3	.....	.....	.....		.....	.....	.....	
As_2O_3	.....	.....	.....	.05	.....	.....	.....	.....
	100.00	100.00	100.00	100.00	100.00	100.00	100.00	100.00
Salinity, parts per million	51,170	60,500	72,700	213,700	18,500	13,600	49,100	76,560

[a] *An improbable analysis* of Mono Lake water, by Winslow Anderson, is given in his *Mineral Springs and Health* Resorts of California, San Francisco, 1892, p. 198. In it *the calcium salts* predominate over all others.

Like Soda Lake, Owens and Mono lakes both yield trona on evaporation, and at Owens Lake it has been prepared on a commercial scale.[a] Soda Lake was also utilized at one time for the same purpose. Borax Lake, according to Becker, derives its boron from neighboring hot springs. It deposits some calcareous sinter.

NORTHERN LAKES.

The region of alkaline lakes continues northward from Nevada and California, and several of the waters have been analyzed. The analyses are given in the subjoined table.

Analyses of water from northern alkaline lakes.

A. Abert Lake, Oregon. Analysis by T. M. Chatard, Bull. U. S. Geol. Survey No. 60, p. 55, 1890. An earlier analysis by Taylor is not in accord with this.

B. Harney Lake, Oregon. Analysis by George Steiger in the laboratory of the Survey.

C. Soap Lake, Washington. Analysis by Steiger, Bull. U. S. Geol. Survey No. 113, p. 113, 1893.

D. Soap Lake. Analysis by H. G. Knight, Ann. Rept. Washington Geol. Survey, vol. 1, p. 295, 1901.

E. Moses Lake, Washington. Analysis by Knight, op. cit., p. 294.

F. Goodenough Lake, a shallow pond 28 miles north of Clinton, British Columbia. Analysis by F. G. Wait, Ann. Rept. Geol. Survey Canada, new ser., vol. 11, p. 48 R, 1898.

	A.	B.	C.	D.	E.	F.
Cl	36.04	27.50	13.28	12.87	3.88	7.64
SO_4	1.90	7.67	16.44	16.79	2.87	7.08
CO_3	20.67	25.87	30.22	29.73	51.56	41.41
PO_4	.....	.....	.....	.49	.....	.62
B_4O_7	.....	.92	.....	.....	.....	trace
Na	39.33	35.78	39.60	38.14	19.86	36.17
K	1.44	1.91		1.22	.....	6.65
Ca	.....	none	trace	trace	8.41	.02
Mg	.....	.07	.04	.29	7.25	.04
SiO_2	.62	.28	.42	.47	5.06	.04
Al_2O_3	.....	none	.....	trace	1.11	.33
Fe_2O_3	.....	none	.....	trace		.....
	100.00	100.00	100.00	100.00	100.00	100.00
Salinity, parts per million	39,172	10,477	28,195	27,416	2,966	103,470

All of these waters contain bicarbonates. Goodenough Lake deposits natron, $Na_2CO_3.10H_2O$, of which an analysis is given. Moses Lake, the most dilute of all, is the only one which carries appreciable quantities of lime and magnesia. From the more concentrated waters these bases disappear almost completely. In Moses Lake they must be held in solution by an excess of carbonic acid, although no such excess is shown in the figures reported.

A few saline lakes situated east of the Rocky Mountains have been studied to some extent. The analyses are as follows:

[a] See Chatard's memoir on "natural soda" in Bull. U. S. Geol. Survey No. 60, 1890. The nature of the product will be considered later in the chapter on saline residues.

Analyses of water from saline lakes east of the Rocky Mountains.

A. Wilmington Lake, Wyoming. Analysis by E. E. Slosson, Bull. No. 49, Wyoming Exper. Sta., 1901.

B. Big Lake.

C. Track Lake.

D. Red Lake. These three lakes are known as the Laramie or Union Pacific Lakes of Wyoming. They are usually dry, but in 1888 were filled with water. Analyses by H. Pemberton and G. P. Tucker, Jour. Franklin Inst., vol. 135, p. 52, 1893.

E. Old Wives or Chaplin Lake, Saskatchewan, Canada. Analysis by F. J. Alway and R. A. Gortner, Am. Chem. Jour., vol. 37, p. 3, 1907. Recalculated to 100 per cent from the original summation of 98.55.

	A.	B.	C.	D.	E.
Cl	10.78	8.85	2.74	3.06	4.98
SO_4	16.62	58.16	64.30	64.57	61.86
CO_3	32.75	.....	.....	.....	1.54
B_4O_7	.....	2.03	1.14	.57	.....
Na	39.85	27.00	30.20	29.89	30.65
K	.....	.....	.....	.....	trace
Ca	.....	.93	.53	.59	trace
Mg	.....	3.03	1.09	1.32	.97
Al_2O_3	.....	.....	.....	.....	trace
SiO_2	.....	.....	.....	.....	trace
	100.00	100.00	100.00	100.00	100.00
Salinity,[a] parts per million	119,700	52,600	77,300	93,100	27,300

[a] These figures for salinity have little or no significance, because the "lakes" vary from dry masses of salts to solutions of differing concentration.

Four of these lakes are essentially solutions of sodium sulphate, and resemble certain bodies of water on the Russian steppes.

CENTRAL AND SOUTH AMERICA.

For the saline waters of Central and South America the chemical data are very scanty. Three analyses, however, may be cited here:

Analyses of saline waters from Central and South America.

A. Lake Chichen-Kanab ("little sea"), Yucatan. Analysis by J. L. Howe and H. D. Campbell, Am. Jour. Sci., 4th ser., vol. 2, p. 413, 1896. Two samples were analyzed, and that from the middle of the lake is given below. The water deposits gypsum.

B. Lagoon of Tamentica, Chile. See F. J. San Román, Desierto i cordilleras de Atacama, vol. 3, p. 199, Santiago de Chile, 1902.

C. Rio Saladillo, Argentina. Analysis by Siewert, reported by A. W. Stelzner,[a] Beiträge zur Geol. u. Palaeont. der Argentinischen Repub., 1885. Sample taken at Puente del Monte. The river empties into the Laguna de los Porongos. It is salt during drought, nearly fresh in the rainy season. Stelzner estimates that it carries into the laguna, annually, 584,566,200 kilograms of salts.

	A.	B.	C.
Cl	8.14	50.44	56.74
SO_4	58.64	9.17	4.82
NO_3	.....	2.14	.....
Na	11.99	35.35	36.40
K	.43	2.29	.....
Ca	13.49	.01	1.63
Mg	7.31	.60	.41
	100.00	100.00	100.00
Salinity, parts per million	4,446	285,500	108,250

[a] Stelzner also gives analyses by Doering of the Saladillo between Salta and Jujuy, and of Arroyo Salado in Patagonia.

CASPIAN SEA AND SEA OF ARAL.

The greatest of all the closed basins is that of the Caspian Sea, which was formerly connected, through the Black Sea, with the general oceanic circulation. It is also probable that the Sea of Aral was at some time a part of the same great body of water, and therefore the two sheets are properly to be considered together. Many smaller saline lakes are scattered through the Caspian depression, some of them being recent concentrations from overflows, while others are of much older origin.[a]

The Caspian Sea, however, is something more than a segregated remnant of the ocean. Its water is diluted by the influx of the Volga, the Ural, and other important streams, so that its composition is intermediate between that of a river and that of the open sea. Its salinity is relatively low and very variable. At the north end, near the mouth of the Volga, the water is only brackish; in the deeper southern portions it is much salter. On the eastern side of the Caspian there is a large gulf, the Karaboghaz, into which a current continually flows, through a shallow channel, with no compensating return. This current, it is estimated, carries daily into the gulf 350,000 tons of salt; and therefore the salinity of the Karaboghaz is steadily increasing. Its waters no longer support animal life, and saline deposits are forming upon its bottom. Near its margin gypsum crystals are formed; toward the center of the gulf sodium sulphate is deposited.[b] The latter substance is thrown down only during the winter months, for at summer temperatures the Karaboghaz brine is an unsaturated solution. In cold weather it is saturated with respect to sodium sulphate, but not for the chloride, and the latter remains dissolved.[c] The separation of salts by fractional crystallization is thus well exemplified.

To illustrate the composition of the Caspian and allied waters, a few analyses must suffice. The older data can be found in the works of Bischof and Roth. The following examples are fairly typical:

Analyses of Caspian and allied waters.

A. Caspian Sea. Mean of five analyses by C. Schmidt, Bull. Acad. St. Petersburg, vol. 24, p. 177, 1878.

B. Caspian Sea. Analysis by A. Lebedintzeff, cited by W. Stahl, Natur. Wochenschr., vol. 20, p. 689, 1905.

C. Karaboghaz Gulf. Analysis by Schmidt, loc. cit.

---

[a] For analyses of some of these waters, the Elton, Bogdo, Indersk, and Stepanova lakes, see Roth, Allgem. chem. Geol., vol. 1, p. 469. Modern and complete analyses are much to be desired; the old ones are unsatisfactory.

[b] See S. Kusnetsoff, Zeitschr. prakt. Geol., 1898, p. 26.

[c] See N. S. Kurnakoff, Verhandl. Russ. k. min. Gesell., 2d ser., vol. 38, p. 26 of the proceedings, 1900. For a long paper on the Karaboghaz, also known as the Karabugas or Adschi-darja, see W. Stahl, Natur. Wochenschr., vol. 20, p. 689, 1905. This paper is based on an official Russian report by Spindler and Lebedintzeff, published in 1902.

D. Karaboghaz Gulf. Analysis by Lebedintzeff, cited by Stahl, loc. cit.

E. Tinetzky Lake, a residue of concentration from the Caspian. Analysis by Schmidt, loc. cit.

F. Sea of Aral. Analysis by Schmidt, cited from Roth, Allgem. chem. Geol., vol. 1, p. 465. Schmidt's analyses report bicarbonates, which are here reduced to normal salts. I have also consolidated the insignificant quantities of silica, phosphoric acid, and ferric oxide, which were determined separately.

	A.	B.	C.	D.	E.	F.
Cl	42.04	41.78	53.32	50.26	47.99	35.40
Br	.05	.05	.06	.08	.13	.03
SO_4	23.99	23.78	17.39	15.57	21.25	30.98
CO_3	.37	.93	.....	.13	.....	.85
Na	24.70	24.49	11.51	25.51	18.46	22.62
K	.54	.60	1.83	.81	.24	.54
Rb	.02	.....	.06	.....	.01	.02
Ca	2.29	2.60	.....	.57	.01	4.02
Mg	5.97	5.77	15.83	7.07	11.91	5.50
SiO_2, PO_4, Fe_2O_3	.03	.....	.....	.....	.....	.04
	100.00	100.00	100.00	100.00	100.00	100.00
Salinity, per cent	1.294	1.267	28.50	16.396	28.90	1.084

Analyses C and D show that the Karaboghaz varies from time to time, both in composition and in concentration.

Analyses of the rivers which feed the Caspian seem to be wanting; at least, I have found none recorded. They must have carried large amounts of calcium and of carbonic acid, which have been almost entirely eliminated. The falling off of sulphates and the concentration of magnesium in the more saturated waters is clearly brought out by the table, an order of change which will be considered more fully somewhat later. Both the Caspian Sea and the Sea of Aral differ chemically from the ocean, in their higher proportions of calcium, magnesium, and sulphates.[a]

THE DEAD SEA.

In the water of the Dead Sea some of the phenomena of saline concentration are exhibited to an extreme degree. Sodium compounds have been largely eliminated, and the remaining brine resembles in many respects the mother liquor left by ocean water after the extraction of salt. It is rich in magnesium, calcium, and bromine; the sulphates have been reduced to an insignificant amount, and carbonates are almost entirely lacking. The original solutions, however, from which the Dead Sea was formed were probably not identical in composition with those which produced the salinity of the ocean, and so the bittern of sea water differs from the brine that we are now considering. The two are similar, but not quite the same.

The water of the Dead Sea has been repeatedly analyzed and the older data are reproduced in the works of Bischof and Roth. The

[a] Bergsträsser, in Petermann's Mittheilungen, 1858, pp. 104–105, has brought together *thirty-eight* old analyses of salts from the lakes of Astrakhan and the mouth of the Volga.

best series of analyses are due to A. Terreil,[a] and of his eight, six are given below in reduced form. They represent samples collected from different depths and different parts of the lake, and they show its variable character. One later analysis is included in the table, and also one of the River Jordan, the chief tributary of the Dead Sea. The reduced data are as follows:[b]

Analyses of water from Dead Sea and River Jordan.

A. Surface water, north end of lake. Terreil.
B. At depth of 20 meters, 5 miles east of Wady Mrabba. Terreil.
C. At depth of 42 meters, near Ras Mersed. Terreil.
D. At depth of 120 meters, 5 miles east of Ras Feschkah. Terreil.
E. Same locality as D, at depth of 200 meters. Terreil.
F. Same locality as B, at depth of 300 meters. Terreil.
G. Probably surface water. Analysis by H. Fleck, Jour. Chem. Soc., vol. 42, p. 24, abstract, 1882.
H. River Jordan. Analysis by Anderson, cited from Roth, Allgem. chem. Geol., vol. 1, p. 476. Terreil also made an analysis of this water, but it is obscurely stated. In addition to the substances named in the table, Terreil reports traces of hydrogen sulphide, ammonia, alumina, ferric oxide, and organic matter in the water of the Dead Sea.

	A.	B.	C.	D.	E.	F.	G.	H.
Cl	65.81	70.25	68.16	67.66	67.84	67.30	65.74	49.45
Br	2.37	1.55	1.99	1.98	1.75	2.72	1.49	.....
SO_4	.31	.21	.22	.22	.22	.24	.33	3.64
CO_3	trace	trace	trace	trace	trace	trace	.....	12.72
Na	11.65	6.33	10.21	10.20	10.00	5.50	11.60	15.51
K	1.85	1.70	1.00	1.62	1.79	1.68	3.40	1.13
Ca	4.73	5.54	1.53	1.51	1.68	6.64	5.02	7.89
Mg	13.28	14.42	16.89	16.81	16.72	15.92	12.42	9.51
SiO_2	trace	trace	trace	trace	trace	trace	.....	.15
	100.00	100.00	100.00	100.00	100.00	100.00	100.00	100.00
Salinity, per cent	19.215	20.709	24.263	24.573	25.110	25.998	21.977	0.161

From the foregoing analyses we see that the water of the Dead Sea differs widely from all the other waters that we have examined. The composition of its main feeder, the Jordan, is also unusual. When it enters the Dead Sea, its carbonates and gypsum are precipitated, and its contribution to the lake brine is composed almost entirely of chlorides. The valley of the Jordan and the regions roundabout the Dead Sea contain many beds of rock salt and gypsum, and the neighboring Cretaceous strata are impregnated with the same substances. From these sources the river derives its chlorides and sulphates, and so returns to the lake some products of its former concentration. Hot springs, also, as L. Lartet[c] and others have shown, contribute to the

[a] Compt. Rend., vol. 62, p. 1329, 1866. The earlier analyses, together with one of his own, are elaborately discussed by J. B. Boussingault, in Ann. chim. phys., 3d ser., vol. 48, p. 129, 1856.

[b] More recent analyses of Dead Sea water are by Mitchell, Berg. u. hüttenm. Zeitung, 1902, p. 225; and by A. Stutzer and A. Reich, Chem. Zeitung, vol. 31, p. 845, 1907. The older analyses by F. A. Genth (Ann. Chem. Pharm., vol. 110, p. 240, 1859) and by Roux (Compt. Rend., vol. 57, p. 602, 1863) are also worth consulting.

[c] Bull. Soc. géol. France, 2d ser., vol. 23, pp. 719–760, 1866.

salinity of the waters. To some extent, probably, there is atmospheric transportation of salts from the Mediterranean, and W. Ackroyd[a] regards this as a most important agency, although its influence is probably overestimated. Whatever may have been the origin of the Dead Sea, its water is now essentially a bittern, relatively low in sodium, high in magnesium, and remarkably rich in bromine. The brine from 300 meters depth carries over 7 grams of bromine to the liter, but no iodine has been detected in it.

OTHER RUSSIAN AND ASIATIC LAKES.

Mother liquors having a general similarity to the Dead Sea brine are also furnished by the Elton Lake, in southern Russia, and the Red Lake, near Perekop, in the Crimea. Their analyses, recalculated from the figures given by Roth, appear in the next table. The composition of the Elton water varies with the season of the year, and I have selected an analysis which represents its concentration in August. In spring its tributaries, swollen by melting snow, bring in much sodium chloride and alter its character materially. Analyses of water from several Asiatic lakes are included with these in the following table:

Analyses of certain Russian and Asiatic waters.

A. Elton Lake, Russia. Analysis by Erdmann, cited by Roth, Allgem. chem. Geol., vol. 1, p. 469.

B. Red Lake, Perekop, Crimea. Analysis by Hasshagen, from Roth, op. cit., p. 471. Roth gives analyses of several other Crimean salt lakes.

C. Lake Van, Armenia. Analysis by E. de Chancourtois, Compt. Rend., vol. 21, p. 1111, 1845. Carbonates reduced to normal salts.

D. Lake Urmi or Urmiah, Persia. Analysis by R. T. Günther and J. J. Manley, Proc. Roy. Soc., vol. 65, p. 312, 1899.

E. Salt lake near Shiraz, Persia. Analysis by K. Natterer, Monatsh. Chemie, vol. 16, p. 658, 1895.

F. Gaukhane Lake, southern Persia. Analysis by A. Helder, published by Natterer, op. cit., p. 673.

G. Koko-Nor, Tibet. Analysis by C. Schmidt, Bull. Acad. St. Petersburg, vol. 24, p. 177, 1878. Bicarbonates reduced to normal salts. Sample taken in autumn, 1872.

H. Koko-Nor, Tibet. Analysis by Schmidt, Mél. chim. phys., St. Petersburg, vol. 11, p. 487, 1881. Sample taken in the winter of 1880, from under thick ice.

	A.	B.	C.	D.	E.	F.	G.	H.
Cl	64.22	66.82	27.08	57.33	58.17	59.67	40.05	41.69
Br	.....	.03	.....	.....	.01	.....	.04	.04
I	.....	.11	.....	.....	.....	.....	.....	.....
SO_4	6.82	.....	11.95	5.06	3.48	1.29	17.84	16.30
CO_3	.04	.....	20.71	.....	.23	.....	5.55	6.66
Na	11.27	19.32	37.65	33.98	35.51	37.38	30.60	28.64
K	.....	.58	1.19	.78	.29	.....	1.08	.81
Rb	.....	.....	.....	.....	.....	.....	.04	.04
NH_4	.....	.....	.....	.....	.01	.....	.....	trace
Ca	.10	2.01	.....	.32	.46	.82	1.77	.04
Mg	17.55	11.13	.57	2.53	1.84	.83	2.90	5.66
SiO_2	.....	.....	.85	.....	.....	.01	.09	.08
Fe_2O_3	.....	.....	trace	.....	.....	.....	.02	.02
PO_4	.....	.....	.....	.....	.....	.....	.02	.02
	100.00	100.00	100.00	100.00	100.00	160.00	100.00	100.00
Salinity, per cent	26.50	30.01	2.10	14.85	7.77	25.88	1.11	1.30

[a] Chem. News, vol. 89, p. 13, 1904.

The general resemblance of analyses A and B to those of Dead Sea water is evident. Elton Lake, however, contains a notable proportion of sulphates, which are entirely wanting in the Crimean water. Lake Van is alkaline, and its saline composition is much like that of Mono Lake in California, except that it is less concentrated. Lake Urmi is of the same type as Great Salt Lake, and the two other Persian waters are similar. The Koko-Nor belongs in the same class with the Caspian and the Sea of Aral; but it contains a much larger proportion of carbonates.

In the neighborhood of Minussinsk and Abakansk, government of Yeniseisk, Siberia, there are a number of saline lakes or ponds which have been recently studied by F. Ludwig.[a] The reduced analyses, arranged in the order of their chlorine, are as follows:

Analyses of water from saline lakes of Yeniseisk, Siberia.

A. The Kisil-Kul.
B. Lake Schunett, water collected in 1899.[a]
C. Lake Tagar.
D. Lake Beisk.
E. Bitter Lake.
F. Lake Altai.
G. Lake Biljo. This is the largest of the lakes and measures about 60 kilometers in circumference.
H. Lake Domoshakovo.

	A.	B.	C.	D.	E.	F.	G.	H.
Cl	48.28	38.89	29.52	22.79	20.02	14.38	9.91	3.71
Br	trace	.....	trace	trace	.....	trace	.....	trace
SO_4	14.55	32.19	34.99	42.32	43.83	50.14	52.33	63.62
CO_3	.22	.31	1.55	.61	1.53	1.12	6.22	.08
NO_3	.....	.....	.....	.....	.....	.....	1.07	.07
Na	34.01	16.12	28.41	31.32	31.78	32.83	21.83	30.61
K	.35	.33	1.01	1.01	1.38	.52	.87	.59
Ca	.69	.44	.27	.07	.15	.05	.43	.58
Mg	1.86	11.67	4.12	1.86	1.28	.90	7.28	.74
SiO_2	.04	.01	.04	.01	.03	.03	.03	trace
Al_2O_3	.....	.04	.09	.01	trace	.02	.03	trace
Fe_2O_3	trace	.....	.....	trace	.....	.01	.....	.....
	100.00	100.00	100.00	100.00	100.00	100.00	100.00	100.00
Salinity, per cent	10.87	15.19	2.09	10.47	5.90	10.88	0.88	14.55

[a] Another analysis, of a sample collected in 1898, gave similar but somewhat different results, and showed much greater concentration. This latter sample had a salinity of 25.35 per cent, and its salts contained 0.19 per cent of bromine.

The last analysis in this table, that of Lake Domoshakovo, represents essentially a solution of sodium sulphate, with very little else. It is the extreme type of a sulphate water. The other waters, upon evaporation, yield mixtures of chlorides and sulphates, sodium being the dominant electropositive radicle. In one analysis only is magnesium high; in two others it is important. The calcium is insignificant throughout the series.

[a] Zeitschr. prakt. Geol., vol. 11, p. 401, 1903. Ludwig also gives analyses of sediments and saline deposits from these waters.

A number of other Siberian lakes have been investigated by C. Schmidt, from whose memoirs the subjoined analyses, reduced to standard form, have been selected:[a]

Analyses of water from Siberian lakes.

A. Issyk-Kul. Mél. phys. chim., St. Petersburg, vol. 11, p. 623, 1882.
B. Iletsk salt lake, government of Orenberg. Op. cit., vol. 11, p. 608, 1882. Average.
C. Barchatow bitter lake, 300 versts southwest of Barnaul, government of Tomsk. Op. cit., vol. 11, p. 609, 1882.
D. Bülüktü-Kul or Fish Lake, Kirghiz Steppe. Op. cit., vol. 12, p. 37, 1883.

	A.	B.	C.	D.
Cl	15.64	60.26	45.05	37.96
Br	.03	trace	.11	.04
SO_4	55.94	.47	20.23	27.39
CO_3	1.26	.....	.....	.98
PO_4	.02	.....	.....	.....
Na	11.76	38.86	28.01	23.29
K	1.85	trace	.26	.32
Ca	.94	.33	.....	5.28
Mg	12.50	.08	5.84	4.68
Fe	trace	.....	.....	.....
SiO_2	.06	.....	.....	.06
S, sulphide	.....	.....	.50	.....
	100.00	100.00	100.00	100.00
Salinity, parts per million	3,574	155,230	13,308	11,458

MISCELLANEOUS LAKES.

In the next table I give reduced analyses of several European lakes, of widely varying character. They are as follows:

Analyses of water from several European lakes.

A. Lake Laach, Germany. Analysis by G. Bischof, Lehrb. chem. phys. Geol., 2d ed., vol. 1, p. 316, 1863. This lake occupies the crater of an extinct volcano, and its water is fresh. It is, nevertheless, an alkaline water, and yields sodium carbonate on evaporation.

B. Palic Lake, Banat, Hungary. Analysis by K. von Hauer, Jahrb. K.-k. geol. Reichsanstalt, vol. 7, p. 361, 1856. Iron, magnesium, and calcium are held in solution as bicarbonates, and are precipitated on boiling. Free carbonic acid and organic matter are also present.

C. Illyés or Medve Lake, near Szovata, Hungary. Analysis by B. von Lengyel, Földt. Közl., vol. 28, p. 280, 1898. Recently formed by a sinking of the ground. The neighboring country contains salt deposits.

D. Lake Ruszanda, Hungary. Analysis by J. Schneider, cited by A. Kaleczinzky, Földt. Közl., vol. 28, p. 284, 1889. The data as published show discrepancies which detract from their value. Organic matter omitted.

E. Lake Tekir-Ghiol, Roumania. Analysis by Popovici, Saligny, and Georgesco, cited by P. Bujor, Ann. sci. Univ. Jassy, vol. 1, p. 158, 1901. A lake of about 1,140 hectares, situated only 300 to 400 meters from the Black Sea. The published summation of the analysis is not in accord with the individual figures.

F. Lacu Sarat, Roumania.[b] Analysis by Carnot, cited by Bujor, op. cit., p. 176. In winter this lake deposits crystallized sodium sulphate, mirabilite, $Na_2SO_4.10H_2O$.

[a] In Mém. Acad. St. Petersburg, vol. 20, No. 4, 1873, Schmidt gives analyses of 14 bitter, salt, and fresh lakes on the line from Omsk to Petropavlovsk, and thence to Prasnowskaja.

[b] In a memoir entitled "Aperçu géologique sur les formations salifères et les gisements de sel en Roumanie," Bucharest, 1902, L. Mrazec and W. Teisseyre cite analyses of Lacu Sarat, Lacu Fundata, Lacu Amara, and Lacu Ianca. They also give analyses of Roumanian salt.

	A.	B.	C.	D.	E.	F.
Cl	4.99	15.68	60.18	19.07	60.53	28.25
Br	.....	.....	trace	.....	.18	.....
SO_4	2.97	2.92	.44	22.56	.67	37.12
CO_3	50.97	41.02	.04	19.22	trace	.27
NO_3	.....	.....	.....	.....	trace	.....
PO_4	.....	.....	.....	.52	.....	.....
NH_4	.....	.....	.....	.....	trace	.....
Na	27.05	35.75	39.02	37.07	34.78	31.75
K	.....	.....	.....	1.19	1.68	.....
Ca	9.90	.66	.25	.20	.28	.39
Mg	2.77	3.35	.03	.15	1.84	2.16
Al_2O_3	.....	.....	.....	} traces	} .03	} .02
Fe_2O_3	.....	.35	trace			
SiO_2	1.35	.27	.04	.02	.01	.04
	100.00	100.00	100.00	100.00	100.00	100.00
Salinity, parts per million	218	2,215	233,747	6,276	70,877	58,038

Illyés Lake and the neighboring Black Lake are essentially strong solutions of common salt, formed by the leaching of salt beds. According to A. Kaleczinzky,[a] they have warm layers under a fresh-water surface, which owe their increased temperature to the absorption of solar heat and to the fact that brine has a lower specific heat than water. The surface layer of Black Lake has a temperature of 21°; the warm layer below reaches 56°. These lakes, therefore, are accumulators of heat.

With the analyses of four more lake waters, the present tabulation must close. They are as follows:

Analyses of water from several lakes of Africa and Australia.

A. Natron Lake, near Thebes, Egypt. Analysis by E. Willm, Compt. Rend., vol. 54, p. 1224, 1862. No bromine, iodine, nitrates, or sulphates were detected.

B. Salt lake 32 kilometers north of Pretoria, Transvaal. Described by E. Cohen, Min. pet. Mitth., vol. 15, pp. 1, 194, 1895. Analysis, incomplete, by H. Hopmann. This lake or salt pan is about 400 meters in diameter, and occupies a funnel-shaped depression in granite.

C. The Katwee salt lake, north of Albert Edward Nyanza, central Africa. Analysis by A. Pappe and H. D. Richmond, Jour. Soc. Chem. Ind., vol. 9, p. 734, 1890.

D. Lake Corongamite, Victoria, Australia. Analysis by A. W. Craig and N. T. M. Wilsmore, Fourth Rept. Australian Assoc. Adv. Sci., p. 270, 1892.

	A.	B.	C.	D.
Cl	26.00	43.47	36.67	59.32
Br	.....	.....	.....	.22
SO_4	.....	.03	12.33	1.65
CO_3	32.90	15.17	10.42	undet.
Na	31.05	41.33	33.46	35.07
K	.....	.....	7.09	.84
Ca	3.57	.....	trace	.13
Mg	3.62	.....	trace	2.77
$(AlFe)_2O_3$	1.50	.....	.....	.....
SiO_2	1.36	.....	.03	.....
	100.00	100.00	100.00	100.00
Salinity, parts per million	4,407	211,400	310,000	46,039

[a] Ueber die ungarischen warmen und heissen Kochsalz-Seen, etc. Budapest, 1902. An analysis by Hanko of the Black Lake is given. It is practically identical with that of Illyés Lake; the salinity is 19.53 per cent.

SUMMARY.

With the evidence now before us it is easy to see that the waters of salt and alkaline lakes may be classified in a few fairly well defined groups. First, we have a group of chloride waters, characterized mainly by sodium chloride, which may be regarded as belonging to an oceanic type. In the following table these waters are summed up in the order of diminishing chlorine, only the main constituents being given:

Principal constituents of chloride waters.

	Cl, Br.	SO_4.	CO_3.	Na, K.	Ca.	Mg.
Lake Tekir-Ghiol	60.71	0.67	trace	36.46	0.28	1.84
Iletsk Lake	60.26	.47	.....	38.86	.33	.08
Illyés Lake	60.18	.44	0.04	39.02	.25	.03
Gaukhane Lake	59.67	1.29	.....	37.38	.82	.83
Lake Corongamite	59.54	1.65	(?)	35.91	.13	2.77
Lake near Shiraz	58.18	3.48	.23	35.80	.46	1.84
Lake Urmi	57.33	5.06	.....	34.76	.32	2.53
Rio Saladillo	56.74	4.82	.....	36.40	1.63	.41
Great Salt Lake (average)	55.73	6.76	.01	34.67	.37	2.45
Ocean	55.48	7.69	.21	31.70	1.20	3.72

These analyses suggest if they do not actually prove a similarity of origin for all these bodies of water, and a possible derivation, direct or indirect, from a primitive ocean. Some of the lakes were formed by leaching masses of oceanic salts which were deposited in earlier geologic ages; others are doubtless remnants of oceanic overflows or segregations. In the leaching process the alkaline chlorides dissolved more freely than other salts, and so became concentrated in the newer waters. K. Natterer,[a] in his discussion of the Persian salt lakes, suggests that differing diffusibility may have played a part in the concentration of sodium chloride. As the leaching waters percolated through the soil, the more diffusible alkaline chlorides would be partially separated from the less active calcium and magnesium salts, and would reach the lake reservoir in larger quantities. The composition of Lake Tekir-Ghiol, which is closely adjacent to the Black Sea, would seem to emphasize this suggestion. In it the alkaline chlorides are concentrated, while the other constituents of sea water are present in much less than the normal amounts.

In direct relation to the preceding group of waters are the derived waters of the bittern type. In these, by prolonged evaporation, magnesium salts are concentrated, sodium chloride having crystallized out. The three waters available for comparison are as follows:

[a] Monatsh. Chemie, vol. 16, p. 666, 1895.

Principal constituents of natural bitterns.

	Cl, Br, I.	SO_4.	CO_3.	Na, K.	Ca.	Mg.
Dead Sea (average)	69.52	0.25	trace	11.22	3.81	15.18
Red Lake	66.96	.....	.....	19.90	2.01	11.13
Elton Lake	64.22	6.82	.04	11.27	.10	17.55

From the chloride waters we pass by slow gradations to the sulphate type, as shown in the following condensed analyses. Between the two groups there is no distinct line of demarcation.

Principal constituents of sulphate waters.

	Cl, Br.	SO_4.	CO_3.	Na, K.	Ca.	Mg.
Sevier Lake	52.66	10.88	.....	33.33	0.12	3.01
Tamentica Lagoon	50.44	9.17	.....	37.64	.01	.60
Kisil-Kul	48.28	14.55	0.22	34.36	.69	1.86
Lake Tagar	29.52	34.99	1.55	29.42	.27	4.12
Lacu Sarat	28.25	37.12	.27	31.75	.39	2.16
Lake Beisk	22.79	42.32	.61	32.33	.07	1.86
Bitter Lake	20.02	43.63	1.53	33.16	.15	1.28
Lake Altai	14.38	50.14	1.12	33.35	.05	.90
Old Wives Lake	4.98	61.86	1.54	30.65	.....	.97
Laramie Lakes (average)	4.88	62.34	.....	29.03	.68	1.81
Lake Domoshakovo	3.71	63.62	.08	31.20	.58	.74

Some of these waters have been modified by human agency, which utilized them as sources of salt. They form, nevertheless, a natural series, in which the alkaline radicles are nearly constant in proportion, while the chlorides and sulphates vary reciprocally.

A slightly different composition is represented by a subgroup of sulphato-chloride waters, as shown by the analyses of the Caspian, the Sea of Aral, and two smaller lakes.

Principal constituents of sulphato-chloride waters.

	Cl, Br.	SO_4.	CO_3.	Na, K.	Ca.	Mg.
Barchatow bitter lake	45.16	20.23	.....	28.27	.....	5.84
Caspian Sea	41.96	23.88	0.65	25.16	2.44	5.87
Büldirtü-Kul	38.00	27.39	.98	23.61	5.28	4.68
Sea of Aral	35.43	30.98	.85	23.18	4.02	5.50

Here we have a dilution of oceanic water by sulphate-bearing tributaries, with a falling off of the alkaline metals and an increase in calcium and magnesium. The bitterns derived from these waters differ from the normal bitterns in respect to their proportion of sulphates, but otherwise they represent the same order of changes. I include with them the Schunett Lake of Siberia, which has analogous composition, and also the Issyk-Kul.

Principal constituents of sulphato-chloride waters of the bittern type.

	Cl, Br.	SO_4.	CO_3.	Na, K.	Ca.	Mg.
Karaboghaz Gulf (average)	51.86	16.48	0.07	18.33	0.28	11.45
Tinetzky Lake	48.12	21.25	.....	18.70	.01	11.91
Schunett Lake	38.89	32 19	.31	16.45	.44	11.67
Issyk-Kul	15.67	55.94	1.26	13.61	.94	12.50

The water of Lake Chichen-Kanab in Yucatan is also sulphato-chloride water, but it stands alone as the only known member of a distinct subgroup.

Principal constituents of water of Lake Chichen-Kanab.

	Cl.	SO_4.	CO_3.	Na, K.	Ca.	Mg.
Chichen-Kanab	8.14	58.64	.....	12.42	13.49	7.31

The alkaline lakes, which contain notable quantities of carbonates, are less easy to classify than the foregoing waters, and yet some analogies are clear. First, we have a number of analyses in which the carbonates are largely in excess of all other salts, as follows:

Principal constituents of carbonate waters.

	Cl, Br.	SO_4.	CO_3.	Na, K.	Ca.	Mg.
Moses Lake	3.88	2.87	51.56	19.86	8.41	7.25
Lake Laach	4.99	2.97	50.97	27.05	9.90	2.77
Goodenough Lake	7.64	7.08	41.41	42.82	.02	.04
Black Lake	7.68	13.24	37.79	41.08	.....	.....
Palic Lake	15.68	2.92	41.02	35.75	.66	3.35

In the next group of waters carbonates and chlorides predominate, with sulphates in subordinate quantity.

Principal constituents of carbonate-chloride waters.

	Cl, Br.	SO_4.	CO_3.	Na, K.	Ca.	Mg.
Natron Lake	26.00	.....	32.90	31.05	3.57	3.62
Harney Lake	27.50	7.67	25.87	37.69	none	.07
Borax Lake	32.31	.13	22.47	39.62	.03	.35
Humboldt Lake	31.82	3.27	21.57	36.51	1.35	1.88
Abert Lake	36.04	1.90	20.67	40.77	.....	.....
Salt Lake near Pretoria	43.47	.03	15.17	41.33	.....	.....
Pyramid Lake	41.04	5.25	14.28	35.95	.25	2.28
Winnemucca Lake	47.88	3.76	7.93	38.62	.55	.49

Borax Lake, which also contains 5.05 per cent of B_4O_7 in its saline residue, might well be put in a class by itself; but extreme subdivision is not now desirable.

In the following waters, which are of the "triple" type, chlorides, sulphates, and carbonates are all present in notable quantities:

Principal constituents of "triple" waters.

	Cl, Br.	SO_4.	CO_3.	Na, K.	Ca.	Mg.
Wilmington Lake	10.78	16.62	32.75	39.85	.....	.....
Soap Lake (average)	13.07	16.62	29.97	39.48	trace	0.17
Owens Lake	25.67	9.95	23.51	40.01	0.02	.01
Mono Lake	23.34	12.86	23.42	39.78	.04	.10
Tulare Lake (average)	18.82	18.84	23.05	36.78	.89	1.02
Lake Van	27.08	11.95	20.71	38.84	.....	.57
Lake Ruszanda	19.07	22.56	19.22	38.26	.20	.15
Walker Lake	23.77	21.29	17.34	34.83	.90	1.56
Soda Lake (average)	35.95	10.42	14.83	36.00	.....	.22
Katwee salt lake	36.67	12.33	10.42	40.55	.....	.....

Finally there are two waters which might be classed with the sulphato-chlorides, were it not for their moderately alkaline character.

Principal constituents of water of Lakes Biljo and Koko-Nor.

	Cl, Br.	SO_4.	CO_3.	Na, K.	Ca.	Mg.
Lake Biljo	9.91	52.33	6.22	22.70	0.43	7.28
Lake Koko-Nor	40.09	17.84	5.55	31.72	1.77	2.90

In general, as was pointed out in discussing the Lahontan waters, alkaline lakes are representative of volcanic regions, while saline lakes are associated with sedimentary deposits. That is, from a chemical point of view the alkaline waters are the newest, and exhibit the nearest relationship to rivers and springs. By the weathering of rocks carbonates are first formed, as is seen in most rivers near their sources. Under favorable conditions these salts accumulate, and they are transformed into or replaced by other compounds only after a long and slow series of chemical reactions. In recently formed bodies of water, derived from igneous rocks, carbonates are abundant; but as salinity or concentration increases, the slightly soluble calcium carbonate is thrown down, leaving sulphates and chlorides in solution. If more calcium is available, gypsum is precipitated, and the final result is a water containing little except chlorides. The carbonate waters form the beginning, the chloride waters the end of the series. When calcium is deficient in quantity, then mixed waters are produced, in which alkaline sulphates, carbonates, and chlorides may coexist in almost any relative proportions. Waters of mixed type may also be formed by the blending of supplies from different sources, and the contributions of two tributaries may be very unlike. The fresh decomposition products from a volcanic rock and the leachings of sedimentary beds are widely dissimilar; but the chemical changes consequent upon their commingling

ling will follow the order just laid down. This order can not be stated in quantitative terms, for the conditions of equilibrium in complex mixtures are not definitely known. The solubility of a salt in pure water is one thing; its solubility in the presence of other compounds is something quite different; and when the number of possible substances is great the problem becomes hopelessly complicated. Each substance influences every other substance, in a manner which depends partly upon temperature and partly upon concentration, and no known equations can cover the whole field.

Qualitatively, however, the conditions governing the deposition of salts can be simply and intelligibly stated. Suppose we consider a solution so dilute that it contains ions capable of forming the chlorides, sulphates, and carbonates of sodium, calcium, and magnesium, which are the chief salts derivable from natural waters. Upon concentration, the difficultly soluble carbonates of calcium and magnesium will be precipitated first, to be followed by the slightly soluble gypsum. Next in order sodium sulphate and carbonate will form, and these salts are deposited by many saline or alkaline waters. Later, sodium chloride and magnesium sulphate may crystallize out, leaving at last a bittern containing the very soluble chlorides of calcium and magnesium. This is the observed order of concentration, but every step is not necessarily taken in every instance. All of the calcium may be eliminated as carbonate, leaving none for the formation of other salts. All of the sulphuric ions may be taken to produce gypsum, and then no sodium sulphate can form. In short, the actual changes which take place during the concentration of a specified water depend on the proportions of its constituents, and vary from case to case. The proposed order of deposition is simply the general order, which conforms to the facts of observaton and to the known solubilities of the several salts. The least soluble possible salt will form first; the most soluble will remain longest in solution. The formation of double salts will be considered in another chapter.

CHAPTER VI.

MINERAL WELLS AND SPRINGS.

DEFINITION.

Between the so-called "mineral waters" and waters of ordinary character no sharp line of demarcation can be drawn. In fact, some of the springs having the greatest commercial importance yield waters of exceptionally low mineral content and owe their value to their remarkable purity. They are simply potable waters carrying a minimum of foreign matter in solution. Other springs, on the contrary, are characterized by excessive salinity, and between the two extremes nearly every intermediate condition may be observed.

In the chapter on lakes and rivers a number of springs were considered, which represent the ordinary or common type of water supply. Rain water, charged with carbonic acid, percolates through the soil or through relatively thin layers of rock, and emerges with a moderate load of dissolved impurities Upon evaporation such waters give a residue consisting most commonly of calcium carbonate, calcium sulphate, or silica, with minor amounts of alkaline chlorides; and, blending with rain or seepage waters, they form the beginnings of streams. Sometimes sulphates predominate, sometimes carbonates, but chlorides are present much less conspicuously. Calcium is the dominating metal, and sodium occupies, as a rule, a subordinate place. To the vast majority of spring waters these statements apply; but here and there exceptions are encountered which, by their peculiar characters, attract attention and are known as "mineral" wells or springs. Speaking broadly, all springs are mineral springs, for all contain mineral impurities; but in a popular sense the term is restricted to waters of abnormal or unusual composition. A mineral water, then, is merely a water which differs, either in composition or in concentration, from the common potable varities. The term is loose and indefinite, but it has a certain convenience, and we may use it without danger of being led astray.

To put the case differently, a mineral spring may be described as one which owes its character to local as distinguished from widespread or general conditions; and the peculiarities thus acquired may result from a great variety of causes. One water, rising from beds of salt, is charged with sodium chloride; another represents the solution of gypsum; a third may carry substances derived from the sulphides of metalliferous veins, and so on indefinitely. Any soluble

matter existing in the crust of the earth may find its way into the waters of a spring and give to the latter some distinguishing peculiarity. Even in their gaseous contents spring waters differ widely. Some are heavily charged with carbonic acid and effervesce upon reaching the air, and others contain hydrogen sulphide in sufficient quantities to be recognized by the smell. Some waters are strongly acid, some alkaline, and some neutral; waters emerging from beds of pyritiferous shale are often rendered astringent by salts of aluminum or iron; one spring is boiling hot while its neighbors are ice cold; in short, every difference of origin may be reflected in some peculiarity of composition or character. In recent years many mineral springs have been found to be distinctly radioactive, and in a large number of instances argon and helium, albeit in small quantities, are among the gases that the waters hold in solution. These minor characteristics of natural waters can not be dwelt on here.[a] Their full significance is yet to be determined.

CLASSIFICATION.

The classification of waters can be based on a variety of considerations. It may be geological, correlating the springs with their geological origin, or as ancient or modern, or by dividing them into classes according to their derivation from rain water or from sources deep within the earth; it may be physical, drawing a chief distinction between cold and thermal springs; or chemical, in which case differences of composition determine the place which each water shall occupy. To a great extent the three systems of classification overlap, and each one depends more or less on the others; but for the purposes of this memoir, which deals with chemical phenomena, the chemical method is obviously the most appropriate. The other considerations must, of course, be taken into account; but chemical composition is, for us, the determining factor. From this point of view the classification of springs is comparatively simple and follows the lines laid down in the preceding chapters. Waters are classed according to their negative radicles, as chloride, sulphate, carbonate, or acid waters, with various mixed types and occasional examples in which unusual combinations, such as nitrates, borates, sulphides, or silicates, appear. The classification, however, can not be rigid, and to a great extent convenience must govern and modify the usual rules. Mixtures such as we have now to consider can not be arranged according to any hard-and-fast system, but must be dealt with somewhat loosely. The general relationships are simple and evident, but the exceptional cases are common enough to modify any formal scheme of arrangement that might be adopted.

[a] *On argon and helium* in mineral waters see especially C. Moureu and R. Biquard, *Compt. Rend.*, vol. 143, p. 795, 1906. Moureu in an earlier paper (*idem*, vol. 142, p. 1155, 1906), has given good references to the literature of the subject.

CHLORIDE WATERS.

The literature relating to mineral springs is extremely voluminous, and the recorded analyses are numbered by thousands. From such a mass of material only typical or striking examples can be utilized here in order to show the variations in composition which have been observed. As the chloride waters form perhaps the most conspicuous group, we may properly begin with them, and consider first the solutions which upon evaporation yield principally sodium chloride. Waters of this class are very common, and range from potable springs to brines approximating sea water in saline composition. From such brines common salt is commercially obtained, and the subjoined table gives analyses of several important examples.[a] The figures represent the composition of the anhydrous saline matter contained by the several waters, each analysis being reduced from the original form of statement to percentages of ions.

Analyses of chloride waters.

A. Brine from Syracuse, New York. Average of four analyses by C. A. Goessmann, published in Dana's System of Mineralogy, 6th ed., p. 156.

B. Brine from Warsaw, New York. Analysis by F. E. Engelhardt, Bull. New York State Mus. No. 11, p. 38, 1893. Many other analyses are given in this publication.

C. Brine from East Saginaw, Michigan. Well 806 feet deep. Analysis by Goessmann, Geol. Survey Michigan, vol. 3, p. 183, 1873–6.

D. Brine from Zilwaukie, Michigan. Analysis by H. C. Hahn, Geol. Survey Michigan, vol. 3, p. 186, 1873–6.

E. Humboldt salt well, Minnesota. Analysis by C. F. Sidener, Ann. Rept. Geol. Survey Minnesota, vol. 13, p. 101, 1884.

F. Brine from Hutchinson, Kansas. Analysis by E. H. S. Bailey and E. C. Case. Univ. Kansas Geol. Survey, vol. 7, p. 79, 1902.

G. Artesian well, Abilene, Kansas. Analysis by E. H. S. Bailey and F. B. Porter, Univ. Kansas Geol. Survey, vol. 7, p. 130, 1902. Well 1,260 feet deep.

H. Bryan's well, Bistineau, Louisiana. Analysis by M. Bird, Rept. on Geology of Louisiana, 1902, p. 40. Many other analyses of salines are given in this volume. The brines are of Cretaceous origin.

	A.	B.	C.	D.	E.	F.	G.	H.
Cl	58.85	59.71	61.27	61.59	55.96	59.60	61.65	59.96
Br	.01	.....	.....	.....	.....	.....	.29	.....
I	.....	.....	.....	.....	.....	.....	[b] trace	.....
SO_4	2.29	1.19	.52	.24	4.18	1.33	.07	.....
CO_3	.01	.....	.....	trace	1.68	.....	.....	.....
PO_4	.....	.....	.....	.....	trace	.....	.....	.....
Na	37.29	38.38	32.76	32.21	32.56	38.38	31.57	37.20
K	.03	.....	.....	.....	.66	.....	trace	.....
Ca	1.28	.67	4.25	4.47	2.71	.55	4.85	.94
Mg	.23	.05	1.20	1.45	1.80	.11	1.52	.29
Mn	.....	.....	.....	.....	.....	.....	trace	.....
Fe	.01	.....	.....	.....	.....	.....	.05	.....
Fe_2O_3	.....	.....	.....	.04	.02	.....	.....	.....
Al_2O_3	.....	.....	.....	.....	.07	.....	.....	.63
SiO_2	.....	.....	.....	.....	.36	.03	trace	.....
Other solids	.....	.....	.....	.....	.....	.....	.....	.98
	100.00	100.00	100.00	100.00	100.00	100.00	100.00	100.00
Salinity, per cent	16.84	26.34	20.24	24.06	5.72	29.31	17.89	8.93

[a] In Ann. Rept. Geol. Survey Canada, vol. 15, p. 236 S, 1902–3, G. C. Hoffman gives 12 analyses of brines from Manitoba. A brine from a well 1,920 feet deep, at Sand Beach, Michigan, analyzed by S. P. Duffield (Geol. Survey Michigan, vol. 5, pt. 2, p. 82, 1895), is unusually rich in bromine. C. W. Foulk (Bull. No. 8, Geol. Survey Ohio, p. 27, 1906) reports a brine from Pomeroy, Ohio, which is free from sulphates, but contains notable amounts of barium and strontium chlorides.

[b] *I=0.0063 gram per liter.* This is less than 0.01 per cent of the total solids.

Most if not all of the foregoing brines were formed by solution from beds of rock salt. The latter undoubtedly originated from the evaporation of salt lakes or sea water, and in geological age they range from the Cretaceous down to the upper Silurian. The New York brines are from Silurian deposits. The Humboldt well is nearest to ocean water in composition, although it is nearly twice as concentrated. In general, the proportion of sodium chloride is greater than in sea salts, for the reason that that compound redissolves more readily than the gypsum which was deposited with it. The process of deposition and re-solution thus tends to separate the constituents of the original water; and so the composition of the ancient lake or ocean is not exactly reproduced.

The following analyses also represent the salts from chloride waters in which sodium is largely the predominant base.

Analyses of chloride waters—I.

A. Cincinnati artesian well, Cincinnati, Ohio. Analysis by E. S. Wayne, cited by A. C. Peale, in Bull. U. S. Geol. Survey No. 32, p. 133, 1886. This water contains considerable quantities of free H_2S and CO_2.

B. Upper Blue Lick Spring, Kentucky. Analysis by J. F. Judge and A. Fennel, cited by Peale, op. cit., p. 111. Also rich in H_2S and CO_2. I represent here by X an indeterminate mixture of $Ca_3P_2O_8$, Al_2O_3, and Fe_2O_3.

C. Montesano Springs, Missouri. Analysis by P. Schweitzer, Geol. Survey Missouri, vol. 3, p. 77, 1892. This volume contains many analyses of Missouri mineral waters.

D. Deep well at Brunswick, Missouri. Depth 1505 feet. Analysis by Schweitzer, op. cit., p. 97.[a]

E. Utah Hot Springs, 8 miles north of Ogden, Utah. Temperature 55° C. Analysis by F. W. Clarke, Bull. U. S. Geol. Survey No. 9, p. 30, 1884.

F. Spring at Pahua, New Zealand. Analysis by W. Skey, Trans. New Zealand Inst., vol. 10, p. 423, 1877.[a] This spring is notable from the fact that it contains free iodine. According to J. A. Wanklyn (Chem. News, vol. 54, p. 300, 1886) the water of Woodhall Spa, near Lincoln, England, has the same peculiarity. The iodine colors the water brown and can be extracted by carbon disulphide.

	A.	B.	C.	D.	E.	F.
Cl	55.83	53.08	57.38	52.74	58.79	60.78
Br	.04	.51	.31	.....	trace	trace
I, combined	.03	.02	.....	.....	.....	.04
I, free	.....	.....	.....	.....	.....	.11
SO_4	3.12	6.03	5.37	8.36	.94	.15
CO_3	2.63	2.34	.....	1.88	.61	.17
PO_4	.....	.....	.....	.....	.....	.05
Na	33.09	31.47	28.17	30.15	30.38	34.81
K	.27	.96	.15	.....	3.76	.02
Li	.....	.....	.....	.....	trace	.....
Ca	3.72	3.56	6.15	4.74	4.90	3.14
Mg	1.13	1.57	2.30	2.09	.40	.60
Al	.....	.....	.....	.....	.....	.01
Al_2O_3	.....	.....	.....	.....	.02	.....
Fe	.....	.....	.....	.....	.....	trace
Fe_2O_3	.06	.....	.....	.....	.....	.....
SiO_2	.08	.16	.17	.04	.20	.12
X	.....	.30	.....	.....	.....	.....
	100.00	100.00	100.00	100.00	100.00	100.00
Salinity, parts per million	10,589	11,068	8,509	15,905	23,309	21,060

[a] In analyses D and F the bicarbonates of the original statement have been reduced to normal salts.

G. Water of Salsomaggiore, Italy. Analysis by R. Nasini and F. Anderlini, Gazz. chim. ital., vol. 30, i, p. 305, 1900. Contains in 1,000 grams 0.00223 gram Mn and 0.00792 gram B_4O_7. These are less than 0.01 per cent of the total solids.

H. The Marienquelle, Bavaria. Analysis by A. Lipp, Ber. Deutsch. chem. Gesell., vol. 30, p. 309, 1897. Contains also much free CO_2.

I. The Kochbrunnen, Wiesbaden, Germany. Analysis by C. R. Fresenius, Jahrb. Nassau. Ver. Naturkunde, vol. 50, p. 20, 1897.[a] This water also contains 0.000013 gram iodine, 0.00002 gram PO_4, and 0.00016 gram AsO_4 to the liter, each recorded here as a "trace."

J. Water of Arva-Polhora, Hungary. Analysis by W. Kalmann and M. Glaser, Min. pet. Mitth., vol. 18, p. 443, 1898–99. Organic matter, about 0.15 per cent, is excluded from the reduced statement here given.

K. Old sulphur well, Harrogate, England. Analysis by T. E. Thorpe, Jour. Chem. Soc., vol. 39, p. 500, 1881. The memoir contains some other analyses.

L. Chloride of Iron Spa, Harrogate. Analysis by C. H. Bothamley, Jour. Chem. Soc., vol. 89, p. 502, 1881. The same author, in vol. 63, p. 685, 1883, gives analyses of waters from Askern, Yorkshire.

	G.	H.	I.	J.	K.	L.
Cl	61.09	52.72	56.58	58.76	58.81	60.83
Br	.15	.42	.04	.37	.19	.07
I	.03	.54	trace	.14	.01	trace
F	.....	.....	.....	.....	trace	.....
SO_4	.18	trace	.78	.12	.....	.02
S	.....	.....	.....	.....	.23	.....
CO_3	.....	7.66	3.13	1.07	2.12	1.23
PO_4	.....	trace	trace	.02	trace	.....
AsO_4	.....	.....	trace	.....	.....	.....
B_4O_7	trace	trace	.....	.72	.....	.....
BO_2	.....	.....	.01	.....	.....	.....
Na	34.04	33.08	32.60	36.18	33.61	23.45
K	.....	trace	1.16	.42	.48	.35
Li	.07	trace	.04	.22	.01	trace
NH_4	.12	.....	.07	.....	.03	.03
Ca	3.21	4.15	4.05	1.10	2.65	7.28
Sr	.24	.....	.12	.34	trace	.07
Ba	.....	.....	.01	.08	.42	.76
Mg	.82	1.34	.61	.29	1.37	3.12
Mn	.....	.....	.04	.....	.....	.10
Fe''	.03	.....		.14	.....	2.39
Fe_2O_3	.....	.09	.....	.....	.....	.....
Al	.01	trace	.....	.....	trace	.....
Cu	.....	.....	.....	.....	.....	trace
SiO_2	.01	.....	.76	.03	.07	.30
	100.00	100.00	100.00	100.00	100.00	100.00
Salinity, parts per million	159,000	2,970	8,241	30,150	14,800	6,617

[a] For other analyses of Wiesbaden waters see the same journal, vol. 49, pp. 22, 23, 1896.

Although sodium chloride is the principal salt obtainable from the waters represented by the preceding analyses, they owe their interest to other things. They have been selected from the great mass of published material in order to show the extent to which substances like bromine, iodine, sulphur, lithium, barium, strontium, and iron occur in waters of this class. To these minor constituents the therapeutic value of mineral waters is commonly ascribed, but to considerations of that sort no attention can be paid here. The last analysis given, that of the Chloride of Iron Spa at Harrogate, is interesting as marking a transition to another group of chloride waters, in which the proportion of sodium is decreased and large quantities of calcium appear. Sometimes magnesium is also abundant; for example, in salts from the group of springs at Kapouran, Java, S. Meunier[a]

[a] Compt. Rend., vol. 103, p. 1205, 1886.

found 54.2 per cent of calcium chloride and 40.65 per cent of magnesium chloride. The following analyses are characterized by the presence of calcium in large proportion:[a]

Analyses of chloride waters—II.

A. Brine from well 2,667 feet deep at Conneautsville, Pennsylvania. Analysis by A. E. Robinson and C. F. Mabery, Jour. Am. Chem. Soc., vol. 18, p. 915, 1896. A little H_2S is present.

B. Well at Bowerman's mills, Whitby, Canada. Analysis by T. Sterry Hunt, Geology of Canada, p. 547, 1863. Analyses of other waters are given in this memoir.

C. Water from well 192 feet deep, Manitoulin Island, Lake Huron. Analysis by T. Sterry Hunt, Chemical and Geological Essays, p. 158, 1875.

D. Water from the Silver Islet mine, Lake Superior. Analysis by F. D. Adams, Ann. Rept. Geol. Survey Canada, new ser., vol. 1, p. 17 M, 1885.

E. Water from the lower level of the Quincy mine, Hancock, Michigan. Analysis by G. Steiger, in the laboratory of the United States Geological Survey.

F. Water from boring on Kanab Creek, near Port Haney, British Columbia. Analysis by F. G. Wait, Ann. Rept. Geol. Survey Canada, vol. 5, ii, new ser., p. 22 R, 1890–91.

G. Boiling spring at Savu-Savu, Fiji. Analysis by A. Liversidge, Proc. Roy. Soc. New South Wales, vol. 14, p. 147, 1880. Part of the aluminum in this water is reported as $AlCl_3$ and part as Al_2O_3.

	A.	B.	C.	D.	E.	F.	G.
Cl	62.31	64.43	64.45	61.57	63.55	63.39	57.91
Br	.53	.41	.....	.....	.....	.....	.....
I	.01	trace	.....	.....	.....	present	.....
SO_4	.03	.....	.....	.13	.01	none	3.38
CO_3	.27	.09	.....	.48	.01	.....	trace
PO_4	.....	.....	.....	.....	none	.....	trace
Na	18.35	16.17	8.71	18.33	5.63	5.27	16.65
K	1.55	trace	1.92	.67	none	.42	.93
Li	.04	.....	.....	.....	.....	.....	.....
NH_4	.23	.....	.....	.....	.....	.....	.....
Ca	13.86	13.68	20.67	17.46	30.78	30.89	18.34
Sr	.....	trace	.....	.....	.....	.....	.....
Mg	2.53	5.22	4.25	1.21	.01	.03	.04
Al	.02	.....	.....	none	none	.....	.43
Al_2O_3	.....	.....	.....	.....	.....	.....	.54
Fe	.25	trace	.....	none	none	.....	trace
Fe_2O_3	.....	.....	.....	.....	.....	.....	.....
Mn, Co	.....	.....	.....	trace	none	.....	.....
SiO_2	.02	.....	.....	.15	.01	.....	1.78
	100.00	100.00	100.00	100.00	100.00	100.00	100.00
Salinity, parts per million	309,175	46,300	21,660	36,000	212,300	48,500	7,813

The next table contains analyses of waters belonging to the chloride group, but in which notable quantities of other acid radicles are also present. The chlorine, however, predominates.

Analyses of chloride waters—III.

A. Congress Spring, Saratoga, New York. Analysis by C. F. Chandler, cited by A. C. Peale in Bull. U. S. Geol. Survey No. 32, pp. 38, 39, 1886.

B. Hathorn Spring, Saratoga, New York.[b] Analysis by Chandler, loc. cit.

C. Franklin artesian well, Ballston, New York. Analysis by Chandler, op. cit., p. 33. These waters (A, B, and C) are all reported as containing bicarbonates, which in the present tabulation, are reduced to normal salts. They all effervesce because of their large content in free CO_2. The PO_4 in A and C amounts to 0.01 grain per gallon.

[a] See also the analysis of brine from a well at Alma, Michigan, by C. F. Chandler and C. E. Pellew, Geol. Survey Michigan, vol. 5, pt. 2, p. 46, 1894. Also one of water from the Freda well, Keweenaw Point, Michigan, by G. A. König, Rept. State Board Geol. Survey Michigan, 1903, p. 165. In the deep-seated waters around Lake Superior calcium chloride seems to be an important constituent.

[b] For recent analyses of the Hathorn and twelve other Saratoga waters, see J. K. Haywood and B. H. Smith, Bull. No. 91, Bureau of Chemistry, U. S. Dept. Agric., 1905.

D. Artesian well at Louisville, Kentucky. Analysis by J. Lawrence Smith, cited by Peale, op. cit., p. 115. Bicarbonates reduced to normal salts. Lithium is reported as 0.02 grain per gallon.

E. Steamboat Springs, Nevada. Analysis by W. H. Melville, given by G. F. Becker in Mon. U. S. Geol. Survey, vol. 13, p. 349, 1888. Bicarbonates reduced to normal salts. The "trace" of iron represents 0.14 part per million.

F. Lansdowne well, Cheltenham, England. Analysis by T. E. Thorpe, Jour. Chem. Soc., vol. 65, p. 772, 1894. The "trace" of bromine is 0.3 part, and that of iron 0.1 part per million.

G. The Stanislawaquelle, near Karlsdorf, Galicia. Analysis by Von Dunin-Wasowicz and J. Horowitz, Chem. Centralbl., 1899, pt. 2, p. 491. Bicarbonates reduced to normal salts. The NO_3 amounts to 0.02 part per million. One kilogram of this water contains 2.157232 grams of free CO_2 and 0.10665 gram of organic matter.

	A.	B.	C.	D.	E.	F.	G.
Cl	42.00	42.42	41.95	48.03	35.00	38.01	34.6
Br	1.13	.16	.37	.05	.....	trace	.02
I	.02	.02	.02	.04	.....	trace	
F	trace	trace	trace	.....	.....	.....	.....
SO_4	.08	.....	.04	14.93	4.58	20.89	.82
S	.....	.....	.....	.....	.22	.....	.....
CO_3	18.59	19.28	18.66	.49	5.08	4.22	19.96
NO_3	.....	.....	.....	.....	.....	.....	trace
PO_4	trace	trace	trace	.09	.03	trace	.....
B_4O_7	trace	trace	trace	.....	8.88	.....	.....
Na	27.62	27.29	28.84	29.84	30.35	32.80	37.29
K	.78	.68	1.83	.41	3.79	.72	.53
Li	.08	.16	.07	trace	.27	trace	.01
Ca	6.03	5.69	5.04	3.75	.25	1.85	3.64
Sr	trace	trace	trace	.....	.....	.....	1.44
Ba	.09	.12	.06	.....	.....	.....	.82
Mg	3.41	3.92	2.95	2.19	.01	1.37	.....
Mn	.....	.....	.....	.....	.....	trace	.01
Fe	.....	.....	.....	.....	trace	trace	.....
Fe_2O_3	.03	.07	.07	.02	.....	.....	.17
Al	.....	.....	.....	.06	.....	trace	.....
Al_2O_3	trace	.02	.03	.....	.01	.....	.....
As	.....	.....	.....	.....	.10	.....	.....
Sb	.....	.....	.....	.....	.02	.....	.....
Hg	.....	.....	.....	.....	trace	.....	.....
SiO_2	.14	.17	.07	.10	11.41	.14	.69
	100.00	100.00	100.00	100.00	100.00	100.00	100.00
Salinity, parts per million	12,022	15,238	20,315	15,700	2,850	8,870	7,639

SULPHATE WATERS.

The sulphate waters, or the waters in which SO_4 is the principal negative ion, fall, like the chloride waters, into several groups, which shade one into another by imperceptible gradations. Among potable waters of this class, those which upon evaporation yield chiefly calcium sulphate are by far the most common. Many examples of such waters were cited among the analyses of rivers. As a rule, on account of the slight solubility of gypsum, their salinity is relatively low. Waters of this type are frequently found in so-called mineral springs. Other waters, of medicinal significance, are essentially solutions of magnesium sulphate or sodium sulphate; still others contain sulphates of aluminum or iron, and a small group of waters, derived from the oxidation of sulphides, carry heavy metals in considerable quantity. Examples of these different classes are given below, and some sulphate waters which contain free acids will be considered in a special group later. The following analyses are sufficient for present purposes.

Analyses of sulphate waters.

A. Abilena well, 14 miles northwest of Abilene, Kansas, 130 feet deep. Analysis by E. H. S. Bailey, Univ. Geol. Survey Kansas, vol. 7, p. 166, 1902. The "traces" refer to 4 parts NO_3 and 3.2 parts Fe per million of water.

B. Spring near Denver, Colorado. Analysis by L. G. Eakins, Bull. U. S. Geol. Survey No. 60, p. 174, 1890. Contains 210 parts of free CO_2 per million.

C. Cottage well, Cheltenham, England. Analysis by T. E. Thorpe, Jour. Chem. Soc., vol. 65, p. 772, 1894. Contains 0.2 part of Fe per million.

D. Bitter spring at Laa, Austria. Analysis by A. Kauer, Jahrb. K.-k. geol. Reichsanstalt, vol. 20, p. 118, 1870. Contains free CO_2.

E. Water from Cruzy, Hérault, France. Analysis published by Braconnier, Ann. mines, 8th ser., vol. 7, p. 143, 1885. From a well 14 meters deep in an old gypsum quarry. The fissures around the well are lined with fibrous epsomite.

F. St. Lorenzquelle, Leuk, Switzerland. Analysis by G. Lunge and R. E. Schmidt, Zeitschr. anal. Chemie, vol. 25, p. 309, 1886. Contains 0.06 part Li, 0.05 part NH_4, 0.05 part Fe, and 0.11 part Mn per million—in each case less than 0.01 per cent of the total solids.

	A.	B.	C.	D.	E.	F.
Cl	0.48	2.62	6.56	0.57	3.73	0.34
SO_4	66.28	72.56	57.42	69.87	74.16	65.86
CO_3	.60	.....	6.48	4.75	.03	3.74
NO_3	trace	.....	.02	.....	.....	.....
PO_4	.....	.....	.....	.....	.....	trace
As	.....	.....	.....	.....	.....	trace
Na	30.46	11.23	13.51	2.99	4.50	1.50
K	1.08	.22	.48	.35	.03	.30
Li	.....	trace	trace	.....	.....	trace
NH_4	.....	.....	.01	.22	.....	trace
Ca	.67	.53	8.33	7.63	.02	23.55
Sr	.....	.....	.....	.....	.....	.05
Ba	.....	.....	.....	.....	.....	trace
Mg	.41	12.79	7.03	13.18	17.45	3.07
Mn	.....	.....	trace	.....	.....	.01
Fe''	trace	trace	trace	.....	.....	
Fe_2O_3	.....	.....	.....	.02	.01	.....
Al_2O_3	.....	.....	.....		.....	.03
Al	.....	trace	.....	.....	.....	.....
Cu	.....	.....	.....	.....	.....	trace
SiO_2	.02	.05	.16	.42	.07	1.55
	100.00	100.00	100.00	100.00	100.00	100.00
Salinity, parts per million	74,733	60,584	5,518	62,371	101,000	1,948

G. Spring at Srebrenica, Bosnia. Analysis by E. Ludwig.[a] Min. pet. Mitth., vol. 11, p. 303, 1889–90. 1.37 per cent of free H_2SO_4 has been here added to the figure for the SO_4 radicle. A little organic matter (11.2 parts per million) is also present.

H. Alum well, Versailles, Missouri. Analysis by P. Schweitzer, Geol. Survey Missouri, vol. 3, p. 131, 1892.

I. Water from Roncegno, southern Tyrol. Analysis by M. Gläser and W. Kalmann, Ber. Deutsch. chem. Gesell., vol. 21, p. 2879, 1888.

J. Spring on Shoal Creek, 4½ miles west of Joplin, Missouri. Analysis by W. F. Hillebrand, Bull. U. S. Geol. Survey No. 113, p. 49, 1893. Total CO_2, free and combined, 120.5 parts per million. A trace of lead is also reported.

[a] On p. 308 of the same volume Ludwig gives an analysis of an acid water rich in aluminum sulphate from Büdös, Transylvania. Other papers in the volume give a number of important analyses of springs in Bosnia and Transylvania. Some waters containing unusual amounts of strontium are mentioned in Rept. State Board Geol. Survey Michigan, 1905, p. 555.

	G.	H.	I.	J.
Cl	0.48	.....	0.03	0.48
SO_4	65.33	76.57	70.93	52.76
CO_3	.....	.....	.....	8.00
PO_4	trace	.....	.23	.....
H_3AsO_4	.....	.....	1.93	.....
AsO_2	.41	.....	.....	.....
Na	.31	1.19	1.25	.67
K	.32	.....	.23	.46
Li	trace	.....	.....	.....
Ca	3.00	5.82	7.08	11.32
Mg	1.48	3.39	.93	.71
Mn	.12	.....	.78	.42
Fe''	24.98	4.28	.03	.11
Fe'''	.....	.....	11.09	.....
Al	1.21	7.36	3.09	.08
Co	.....	.....	.17	.....
Ni	.....	.....	.41	.....
Cd	.....	.....	.....	.10
Zn	.30	.....	.06	22.31
Cu	.36	.....	.15	.04
SiO_2	1.70	1.39	1.61	2.54
	100.00	100.00	100.00	100.00
Salinity, parts per million	1,723	3,303	8,150	540

The Roncegno water evidently derives its saline constituents from metallic sulphides, apparently, in great part, from arsenical pyrites. Arsenical waters are not uncommon, and some of them contain enough arsenic to be poisonous. The water from Shoal Creek represents the oxidation of zinc blende, together with some reaction upon the adjacent limestones, from which its calcium and carbonic ions were obtained. It is essentially the same thing as a mine water, although it is not derived from any artificial opening. For comparison, three analyses of mine waters, carried out in the laboratory of the Geological Survey, are appended. Two of them are zinc waters; the third is a strong solution of copper sulphate. Such waters play an important part in the leaching and reprecipitation of ores, and will be more fully considered later.

Analyses of mine waters.

A, B. Two mine waters from the Missouri zinc region,[a] analyzed by H. N. Stokes.

C. Water from the Mountain View mine, Butte, Montana. Analysis by W. F. Hillebrand. Specific gravity, 1.1317 at 15° C. Contains, in parts per million, 3.5 Ni, 4.6 Co, 6.8 K, and 1.5 PO_4.

	A.	B.	C.
Cl	0.16	0.03	0.01
SO_4	64.47	63.26	60.29
PO_4	.....	.....	trace
AsO_4	.....	.....	trace
Na	1.14	.50	.04
K	.10	trace	trace
Li	trace	none	trace
Ca	14.38	3.55	.26
Mg	1.36	.26	.13
Mn	.08	.02	.01
Fe''	6.49	4.88	.04
Ni	.....	.....	trace
Co	.....	.....	trace
Zn	10.74	24.80	.37
Cu	trace	.04	38.72
Cd	.02	.09	.....
Al	.20	1.46	.07
SiO_2	.86	1.11	.06
	100.00	100.00	100.00
Salinity, parts per million	4,232	9,754	117,850

[a] Two similar waters from the same region were analyzed by C. P. Williams, Am. Chemist, vol. 7, p. 246, 1877.

Two other examples of intermediate waters, containing both sulphates and chlorides, but with the former in excess, may be cited here. Both are from Indiana, and the analyses are by W. A. Noyes.

Analyses of sulphato-chloride waters.

A. King's mineral spring, near Dallas. Twenty-sixth Ann. Rept. Indiana Dept. Geology, p. 32, 1901.[a] Contains traces of Al, Fe, Ba, Sr, Li, Mn, Ni, Zn, Br, PO_4, and B_4O_7.

B. West Baden Spring. Op. cit., p. 109. Contains traces of Al, Fe, Ba, Sr, Li, Br, I, PO_4, and B_4O_7. Also 32.5 parts of H_2S per million of water.

	A.	B.
Cl	11.10	18.19
SO_4	59.68	46.66
CO_3	1.67	4.11
Na	13.89	11.72
K	.49	.78
Ca	2.91	13.16
Mg	10.19	5.21
SiO_2	.07	.17
	100.00	100.00
Salinity, parts per million	15,682	4,417

[a] This volume contains an elaborate report upon the mineral waters of Indiana, in which many other analyses are cited.

CARBONATE WATERS.

The carbonate waters, those in which CO_3 or HCO_3 is the principal negative ion, fall into two main subdivisions, calcium being the important base in one, and sodium in the other. A large number of lake and river waters as we have already seen, belong to the first of these groups, and so do many springs of the usual potable type; waters of the second group, however, are not uncommon. In most of these waters the carbonic acid present is sufficient to form bicarbonates—a condition which renders it possible for calcium, magnesium, and iron to remain in solution. Upon evaporation of such waters, $CaCO_3$ and $MgCO_3$ are deposited, while the ferrous bicarbonate is broken up, and insoluble Fe_2O_3, or some corresponding hydroxide, is formed by oxidation. The anhydrous residue, in such cases, contains no bicarbonates, but the latter may exist when sodium is predominant. The salt $NaHCO_3$ is reasonably stable. On account of these peculiarities, which characterize the carbonate waters, it seems best to state their analyses in two ways—one with bicarbonate ions (when they are given) in terms of parts per million, the other in percentages of anhydrous residue, as in all the preceding tables. Each form of statement has its advantages, but the second method gives the best comparison between different waters. The following analyses represent waters of the carbonate type:

Analyses of carbonate waters.

A. McClelland well, Cass County, Missouri. Analysis by P. Schweitzer, Geol. Survey Missouri, vol. 3, p. 181, 1892.

B. Artesian water, La Junta, Colorado. Well 386 feet deep. Analysis by W. F. Hillebrand, in the laboratory of the United States Geological Survey.

C. Ojo Caliente, near Taos, New Mexico. Analysis by Hillebrand, Bull. U. S. Geol. Survey No. 113, p. 114, 1893. Traces of As, NO_3, Ba, NH_4, and possibly I, were found.

D. The Grande-Grille, Vichy, France.[a] Analysis by J. Bouquet, Ann. chim. phys., 3d ser., vol. 42, p. 304, 1854. Analyses of other Vichy waters and their sediments are given in this memoir.

E. Spring at Hikutaia, Puriri, district of Auckland, New Zealand. Analysis by W. Skey, Trans. New Zealand Inst., vol. 10, p. 423, 1877.

F. Excelsior Springs, Missouri. Analysis by W. P. Mason, Chem. News, vol. 61, p. 123, 1890. This water is notable for the relatively large amount of manganese which it contains.

G. Spring in Pine Creek Valley, near Atlin, British Columbia. Analysis by F. G. Wait, Ann. Rept. Geol. Survey Canada 1900, p. 49 R. This water deposits hydromagnesite and calcareous tufa.

H. Wilhelmsquelle, Karlsbrunn, Austrian Silesia. Analysis by E. Ludwig, Min. pet. Mitth., vol. 4, p. 182, 1882.

---

[a] According to De Gouvenain (Compt. Rend., vol. 76, p. 1063, 1873), Vichy water contains 7.6 parts of fluorine per million. In the water of Bourbon-l'Archambault 2.68 parts of fluorine were found. For other examples of water containing fluorine see J. C. Gil, Mem. Acad. Barcelona, vol. 1, p. 420, 1896; A. F. de Silva and A. d'Aguiar, Bull. Soc. chim., 3d ser., vol. 21, p. 887, 1899; C. Lepierre, Compt. Rend., vol. 128, p. 1289, 1899; J. Casares, Zeitschr. anal. Chemie, vol. 34, p. 546, 1895; vol. 44, p. 729, 1905, and P. Carles, Compt. Rend., vol. 144, p. 37, 1907. Carles rarely failed to detect fluorine in mineral waters, commonly from 0.002 to 0.004 gram per liter. In one Vichy water he found 0.018 gram, his maximum. This is 18 parts per million.

I.—PARTS PER MILLION OF WATER.

	A.	B.	C.	D.	E.	F.	G.	H.
Cl	94	66.9	231.4	324	190.2	11.98	1.5	1.09
I					trace			
F			5.2					
SO_4	88	71.1	151.0	197	47.9	2.68	60.2	6.48
S	1							
CO_3		791.5	1,095.9	2,392		273.75		
HCO_3	1,287				5,305.8	6.79	6,339.1	405.18
PO_4			.2	80	present		trace	.54
AsO_4			trace	2				trace
B_4O_7			4.2				trace	
Na	581	668.7	995.7	1,851	1,897.1	9.51	51.9	5.24
K		6.4	31.4	151	31.6	3.65	12.0	1.76
Li		trace	3.4		trace			trace
Ca	4	4.4	22.8	120	100.6	145.10	116.8	66.27
Sr			1.4	2				trace
Mg	2	2.5	9.5	58	60.2	15.63	1,152.3	18.85
Mn		trace				4.50		.05
Fe		2.4			trace	11.31	6.7	46.57
Fe_2O_3			1.6	2				
Al_2O_3		3.4	.5			2.10	6.5	.30
SiO_2	12	51.0	60.2	70	39.6	12.00	82.5	69.36
	2,069	1,668.3	2,614.4	5,249	7,673.1	489.00	7,829.5	621.69

II.—PERCENTAGE OF TOTAL SOLIDS, ALL CARBONATES NORMAL.

Cl	6.63	4.01	8.85	6.17	3.84	2.42	0.03	0.28
I					trace			
F			.19					
SO_4	6.21	4.26	5.77	3.75	.98	.54	1.31	1.68
S	.06							
CO_3	44.76	47.45	41.91	45.57	52.09	55.92	67.56	38.72
PO_4			.01	1.52	present		trace	.14
AsO_4				.04				trace
B_4O_7			.16				trace	
Na	41.07	40.09	38.08	35.27	38.39	1.92	1.13	1.36
K		.38	1.20	2.88	.64	.73	.26	.46
Li		trace	.12		trace			trace
Ca	.30	.27	.87	2.29	2.04	29.28	2.54	17.18
Sr			.05	.04				trace
Mg	.12	.15	.41	1.11	1.22	3.15	25.03	4.89
Mn		trace	none			.91		.01
Fe		.14			trace	2.28		
Fe_2O_3			.06	.04			.21	17.24
Al_2O_3		.20	.02			.43	.14	.07
SiO_2	.85	3.05	2.30	1.32	.80	2.42	1.79	17.97
	100.00	100.00	100.00	100.00	100.00	100.00	100.00	100.00

WATERS OF MIXED TYPE.

The following analyses, which are all reduced to the normal standard, represent waters of mixed types, chlorides with carbonates; sulphates with carbonates; or chlorides, carbonates, and sulphates all together. Waters of this character are very common, and show almost every stage of intermediate gradation.

Analyses of waters of mixed types.

A. The Virginia Hot Springs, Virginia. Average of six springs, analyzed by F. W. Clarke, Bull. U. S. Geol. Survey No. 9, p. 33, 1884.

B. The Life well, Fairhaven Springs, Missouri. Analysis by P. Schweitzer, Geol. Survey Missouri, vol. 3, p. 174, 1892.

C. Deep well, Macomb, Illinois. Analyzed by G. Steiger in the laboratory of the United States Geological Survey.

D. Cleopatra Spring, Yellowstone National Park. Analysis by F. A. Gooch and J. E. Whitfield, Bull. U. S. Geol. Survey No. 47, p. 36, 1888. Free CO_2, 354 parts per million.

E. Orange Spring, Yellowstone National Park. Analysis by Gooch and Whitfield, op. cit., p. 38. Free CO_2, 92 parts per million.

F. Königsquelle, Bad Elster, Saxony. Analysis by R. Flechsig, cited by A. Goldberg, 15. Ber. Natur. Gesell. Chemnitz, pp. 74, 108, 1904. This memoir is a monograph on the mineral waters of Saxony, and contains many analyses. Bicarbonates reduced to normal salts. Free CO_2 is also present.

G. The Sprudel, Carlsbad, Bohemia. Analysis by F. Ragsky, cited by Roth, Allgem. chem. Geol., vol. 1, p. 569. Contains 0.7604 gram free and half-combined CO_2 per kilogram. Also traces of Br, I, Li, B, Rb, and Cs.

H. Chalybeate water, Mittagong, New South Wales. Analysis by J. C. H. Mingaye, Proc. Roy. Soc. New South Wales, vol. 26, p. 73, 1892. A very unusual water. In the same memoir Mingaye gives many other analyses of Australian spring, artesian, and well waters.

	A.	B.	C.	D.	E.	F.	G.	H.
Cl	0.64	0.06	18.02	10.09	10.07	20.36	11.52	27.34
Br	.....	.....	.....	trace	trace	.....	.....	.....
F	.....	.....	.....	.....	.....	.....	.03	.....
SO_4	21.73	51.54	33.22	30.44	32.80	31.47	31.19	.....
CO_3	40.02	16.84	13.14	21.65	20.76	10.96	19.15	30.58
PO_4	.....	.....	.....	.....	.....	.....	.01	.....
AsO_4	.....	.....	.....	.26	.....	.....	.....	.....
B_4O_7	.....	.....	.....	1.46	undet.	.....	.....	.....
Na	1.81	5.33	26.88	7.50	7.65	32.51	32.49	7.13
K	2.04	.....	.79	2.95	3.78	.45	1.35	8.96
Li	.....	.....	.....	.13	.10	.23	.....	.....
NH_4	.....	.....	.....	.03	.....	.....	.....	.....
Ca	23.35	16.86	5.26	17.76	17.50	1.40	2.23	4.25
Sr	.....	.....	.....	.....	.....	.....	.01	.....
Mg	5.82	6.39	2.23	4.21	4.09	.44	.65	5.89
Mn	.....	.....	.....	.....	.....	.19	.01	.....
Fe	.....	.79	.....	.....	.....	.59	.02	15.85
Fe_2O_3	.....	.....	.07	.....	.....	.....	.....	.....
Al	.....	.....	.....	.....	.....	.....	trace	.....
Al_2O_3	.58	.....	.04	.54	.13	.....	.....	.....
SiO_2	4.01	2.19	.35	2.98	3.12	1.40	1.34	.....
	100.00	100.00	100.00	100.00	100.00	100.00	100.00	100.00
Salinity, parts per million	563	1,670	3,008	1,732	1,612	4,991	5,431	225

SILICEOUS WATERS.

Waters characterized by a large relative proportion of silica are common, and a number of examples were noted among river waters, Uruguay River forming the extreme case. Springs issuing from feldspathic rocks are likely to contain silica as a chief inorganic constituent, but the absolute amount of it is generally small. In volcanic waters, on the other hand, and especially in geyser waters, the silica may reach half a gram to the liter, and sometimes even more.[a] It is usually reported as SiO_2; although in some cases, when the ordinary acid radicles are insufficient to satisfy the bases, it becomes necessary to assume the existence of silicates, although their precise nature is unknown. For such waters it is convenient to report this saline silica in the form of the metasilicic radicle SiO_3, the dried residue being supposed to contain the sodium salt Na_2SiO_3; but this is hardly more than a convenient device for evading a recognized uncertainty. In solution, according to L. Kahlenberg and A. T. Lincoln,[b] sodium metasilicate is hydrolyzed into colloidal silica and sodium hydroxide:

[a] For example, the Opal Spring, in the Yellowstone National Park, carries 0.7620 gram of silica per kilogram of water.

[b] Jour. Physical Chem., vol. 2, p. 77, 1898.

and this conclusion was also reached by F. Kohlrausch[a] about five years earlier, although he stated it in a more tentative form. In natural waters, then, silica is actually present in the colloidal state, and not in acid ions. On evaporation to dryness the silicate may form, but only when there is a deficiency of other acid groups. Such a deficiency is indicated by a pronounced alkalinity in any highly siliceous water.

For convenience, the silicic waters are divided below into two groups—first, two waters are given which are probably not of volcanic origin; second, a number of geyser waters appear in a table by themselves. The two waters just mentioned are as follows. Both are quite dilute:

Analyses of silicic waters not of volcanic origin.

A. Big Iron Spring, Hot Springs of Arkansas.[a] Analysis by J. K. Haywood, Rept. to U. S. Dept. Interior, 1902. This is a typical water, selected from among the 46 springs which were analyzed. All the hot springs in this group are very much alike. Haywood reports his carbonates wholly as bicarbonates, and his figures are here restated in normal form—that is, HCO_3 has been recalculated into the proper quantity of CO_3 corresponding to the normal salts.

B. Cascade Spring, Olette, eastern Pyrenees. One of six analyses by E. Willm, Compt. Rend., vol. 104, p. 1178, 1887. Temperature 79.4° C. In this water, which might also be classed as a sulphur water, the radicle S_2O_3 represents the presence of thiosulphates, produced by the partial oxidation of sulphides. Thiosulphates have also been reported in other waters, and several examples from Indiana are cited in Twenty-sixth Ann. Rept. Indiana Dept. Geology, pp. 76, 81, 86, 1901.

	A.	B.
Cl	1.27	4.38
Br, I	traces	.....
SO_4	3.93	7.28
S_2O_3	.....	4.81
S	.....	3.38
CO_3	41.47	12.14
NO_3	.23	.....
PO_4	.03	.....
BO_2	.64	.....
Na	2.38	26.09
K	.80	2.00
Li	trace	.....
NH_4	.03	.....
Ca	23.54	1.01
Ba, Sr	traces	.....
Mg	2.56	trace
Mn	.17	.....
Fe, Al	.10	.....
SiO_2	22.85	38.91
	100.00	100.00
Salinity, parts per million	[b] 199	244

[a] On the radioactivity of the Arkansas Hot Springs, see B. B. Boltwood, Am. Jour. Sci., 4th ser., vol. 20, p. 128, 1905.

[b] 284.8 in the original, where bicarbonates are included. In that statement HCO_3 forms 59.02 per cent of the total solids. This water might be equally well classed with the carbonate waters.

For geyser waters and waters of similar character the data are abundant and only a few examples need be utilized here.

[a] Zeitschr. physikal. Chemie, vol. 12, p. 773, 1893.

Analyses of geyser waters.

C. Coral Spring, Norris Basin, Yellowstone National Park.

D. Echinus Spring, Norris Basin.

E. Bench Spring, Upper Geyser Basin, Yellowstone National Park.

F. Old Faithful Geyser, Upper Geyser Basin.

G. Excelsior Geyser, Midway Basin, Yellowstone National Park. Analyses C to G by F. A. Gooch and J. E. Whitfield, Bull. U. S. Geol. Survey No. 47, 1888. A number of other geyser waters were analyzed and are reported in this memoir. The figures given here vary somewhat from the original statements, having been recalculated on a different basis. The discrepancies, however, are very slight.

H. Great Geyser, Iceland. Analysis by Sandberger, Ann. Chem. Pharm., vol. 62, p. 49. 1847.

I. Te Tarata, Rotorua, New Zealand. The water which formed the white terrace of Rotomahana. A large excess of silica over bases, represented as SiO_3.

J. Otukapuarangi, Rotorua geysers. The water of the pink terrace. Excess of silica very small. Analyses I and J by W. Skey, Trans. New Zealand Inst., vol. 10, p. 423, 1877. Thirteen other analyses are given in this memoir.[a]

	C.	D.	E.	F.	G.	H.	I.	J.
Cl	36.61	14.93	trace	31.64	20.91	13.52	26.82	37.52
Br	.....	trace	.....	.25	trace	.....	.....	.....
SO_4	1.84	28.65	29.22	1.30	1.31	9.01	3.60	4.96
S	.....	.....	.....	.....	.....	.32	.....	.....
CO_3	.15	.....	.....	8.78	25.01	10.16	.....	.....
PO_4	.....	.....	.....	none	trace	.....	trace	.....
AsO_4	.08	.29	.....	.24	.29	.....	.....	.....
B_4O_7	2.24	2.38	.....	1.19	1.34	.....	.....	.....
Na	21.44	15.65	12.15	26.42	31.34	19.71	33.94	24.22
K	4.45	4.89	2.05	1.93	2.43	1.88	1.01	.36
Li	.22	trace	trace	.40	.15	.....	trace	.....
NH_4	.02	.13	.....	trace	trace	.28	.....	.....
Ca	.39	1.42	trace	.11	.17	.....	.38	2.59
Mg	.08	none	trace	.04	.17	.08	.09	.19
Mn	.....	.....	.....	trace	trace	.....	.....	.....
Fe	trace	none	.....	trace	.13	.....	.....	.....
Fe_2O_3	.....	.....	} 5.80	.....	.....	.....	.20	trace
Al_2O_3	.76	.....		.12	.17	.....	.01	.35
Al	.....	.33	.....	.....	.....	.....	.....	.....
SiO_2	31.72	31.33	50.78	27.58	16.58	45.04	.....	29.81
SiO_3	.....	.....	.....	.....	.....	.....	33.95	.....
	100.00	100.00	100.00	100.00	100.00	100.00	100.00	100.00
Salinity, parts per million	1,830	808	473	1,388	1,336	1,131	2,064	2,735

[a] J. S. Maclaurin, in Thirty-ninth Ann. Rept. Colonial Laboratory, Mines Dept., New Zealand, gives 23 analyses of mineral springs in New Zealand. Several of them are very high in silica.

NITRATE, PHOSPHATE, AND BORATE WATERS.

Although waters containing small quantities of nitrates, borates, or phosphates are not uncommon, waters in which these compounds are conspicuous are rare. Melville's analysis of Steamboat Springs has already been cited, and the salts from that water contain nearly 9 per cent of the radicle B_4O_7, corresponding to about 11.5 per cent of anhydrous borax.[a] Nitrates are usually regarded as evidence of pollution in waters, but they are not necessarily of that character. In arid regions, where nitrification goes on rapidly, nitrates may occur in considerable amounts; some of the underground waters of

[a] Boric acid in natural waters has been discussed by L. Dieulafait in Compt. Rend., vol. 93, p. 224, 1881; vol. 94, p. 1352, 1882; and vol. 100, pp. 1017, 1240, 1885. According to L. Kahlenberg and O. Schreiner, Zeitschr. physikal. Chemie, vol. 20, p. 547, 1896, the group B_4O_7 is not the true ion of the borates. It is a convenient expression, however, for the negative radicle of borax.

Arizona contain as high as 160 parts per million of nitrogen in this form.[a] The following analyses probably represent extreme examples of phosphates, borates, and nitrates in natural waters:

Analyses of phosphate, borate, and nitrate waters.

A. Hot spring from sulphur bank on the margin of Clear Lake, California. Analysis by G. E. Moore, Geol. Survey California, Geology, p. 99, 1865. In the original the carbonates are given as bicarbonates, and ammonium bicarbonate is reported to the extent of 107.76 grains per gallon. So great a proportion of ammonium in a water is extraordinary, although one acid water, cited later (p. 156), surpasses it. In the tabulation the bicarbonates are reduced to normal salts.

B. Hot water from the Hermann shaft, Sulphur Bank, California.

C. Hot water from the Parrott shaft, Sulphur Bank. Analyses B and C by W. H. Melville, cited by G. F. Becker, Mon. U. S. Geol. Survey, vol. 13, p. 259, 1888. Some organic matter, a little H_2S, and a considerable amount of CO_2 are reported in these waters.

D. Phosphatic water from Viry, Seine-et-Oise, France. Analysis by Bourgoin and Chastaing; abstract in Jour. Chem. Soc., vol. 54, p. 354, 1888. The water issues from a gallery cut in clay. Bicarbonates reduced to normal salts.

E. Spring "Valette" at Cransac, Aveyron, France. One of nine analyses by A. Carnot, Compt. Rend., vol. 111, p. 192, 1890. These springs issue below beds of coal and carbonaceous schists, in which fires have occurred. The nitrates were derived from the oxidation of the nitrogen compounds contained in the coal.

F. The holy well Zem-Zem at Mecca. Analysis by P. Van Romburgh, Rec. trav. chim., vol. 5, p. 265, 1886. For a corroborative analysis see M. Greshoff, idem, vol. 16, p. 354, 1897. The nitrates of this water are commonly ascribed to pollution by human agency; but it is not certain that so large a quantity, absolute or relative, could be derived from that source.[b]

	A.	B.	C.	D.	E.	F.
Cl	16.49	13.57	14.39	5.11	5.45	16.44
I	.03					
SO_4	trace	.32	10.06	7.74	27.87	14.04
CO_3	21.96	22.38	4.73	19.46	2.58	12.78
NO_3				6.33	36.09	24.62
B_4O_7	25.61	27.98	40.09			
PO_4				22.41		
Na	24.99	33.97	28.49	3.32	3.53	12.66
K	trace	.48	.84	trace	.68	6.67
Li				trace	trace	
NH_4	7.88	.05	.02			
Ca	trace	.41	.44	30.38	15.93	8.70
Mg	trace	.11	.03	1.21	5.17	2.70
Mn					.06	
Fe''			.01			
Fe'''					.06	
Al_2O_3	.40					
SiO_2	2.64	.73	.90	4.04	2.58	1.39
	10.000	100.00	100.00	100.00	100.00	100.00
Salinity, parts per million	[c] 5,343	5,096	4,632	490	1,163	3,455

[a] See W. W. Skinner, Bull. No. 46, Univ. Arizona Agric. Exper. Sta., 1903.

[b] The mineral water of Cherrydale, Virginia, is also reported to be rich in nitrates. See analysis by J. K. Haywood and B. H. Smith, of a commercial bottled sample, in Bull. No. 91, Bureau of Chemistry, U. S. Dept. Agric., p. 54, 1905.

[c] Reckoned with normal carbonates. With bicarbonates the salinity becomes 6,556 parts per million.

ACID WATERS.

The last group of waters that we have to consider are those which contain free acids, sulphuric or hydrochloric. They may be classified in two divisions—first, acid waters derived from sedimentary rocks, their acidity being probably due to the oxidation of pyrites or other sulphides; second, waters of volcanic origin. Under the first heading the four analyses given below may be cited. In these analyses it seems best to state the free acids as such and not in the form of ions, and to give, instead of the normal "salinity," the total inorganic impurity in parts per million.[a]

Analyses of acid waters from sedimentary rocks.

A. The Tuscarora sour spring, 9 miles south of Brantford, Canada. Analysis by T. Sterry Hunt, Geol. Survey Canada, 1863, p. 545.

B. Oak Orchard Spring, Alabama, Genesee County, New York. Analysis by W. J. Craw, Am. Jour. Sci., 2d ser., vol. 9, p. 449, 1850. The free acid is stated in the original as SO_3; it is here recalculated into H_2SO_4.

C. Spring 9 miles northwest of Jonesville, Lee County, Virginia. Analysis by L. E. Smoot, Am. Chem. Jour., vol. 19, p. 234, 1897. Acidity low.

D. Rockbridge Alum Spring, Virginia. Analysis by M. B. Hardin, Am. Chemist, vol. 4, p. 247, 1873–74. This water and that analyzed by Smoot might be equally well put in the ordinary sulphate group with other "alum" springs.

	A.	B.	C.	D.
H_2SO_4, free	69.62	47.87	5.82	9.37
HNO_3, free	.....	.....	.18	trace
Cl	.....	.43	.....	.32
SO_4, combined	22.11	36.28	75.14	68.21
PO_4	trace	.....	.....	trace
Na	.26	.87	1.19	.22
K	.44	.71	.....	.11
Li	.....	.....	.....	.01
Ca	3.70	6.39	.....	.38
Mg	.50	2.06	.....	1.11
Fe''	2.17	3.06	.....	1.19
Fe'''	.....	.....	2.24	.....
Mn	.....	.....	.....	.69
Ni	.....	.....	.....	.07
Co	.....	.....	.....	.05
Zn	.....	.....	.....	.08
Cu	.....	.....	.....	trace
Al	1.20	1.00	12.55	11.08
SiO_2	.....	1.33	2.88	7.11
	100.00	100.00	100.00	100.00
Total inorganic impurity, parts per million	6,161	[a] 5,136	3,715	464

[a] 4,685 when the free acid is reckoned as SO_3.

Among volcanic waters acidity is much more common, and many examples of it are known. The following analyses are among the most typical, and are stated in the normal percentage form:

Analyses of acid waters of volcanic origin.

A. Devil's Inkpot, Yellowstone National Park. Analysis by F. A. Gooch and J. E. Whitfield, Bull. U. S. Geol. Survey No. 47, p. 80, 1888. Acidity slight. This water is unique on account of its high proportion of ammonium salts. It contains NH_4 equivalent to 2.8

[a] In Bull. U. S. Geol. Survey No. 315, p. 489, 1907, W. T. Lee cites an analysis by W. M. Barr of a strongly acid water from the sulphur beds of Cove Creek, Utah.

grams of ammonium sulphate per liter, or about 83 per cent of the total impurity.[a] Contains also 65 parts of free CO_2 and 5 parts of H_2S per million.

B. Rio Vinagre, Colombia. Analysis by J. B. Boussingault, Ann. chim. phys., 5th ser., vol. 2, p. 80, 1874.[b] Free SO_3 recalculated into H_2SO_4.

C. Hot Spring, Paramo de Ruiz, Colombia. Analysis by H. Lewy, cited by Boussingault, op. cit., p. 91. Free SO_3 recalculated into H_2SO_4.

D. Solfatara at Pozzuoli, Italy. Analysis by S. De Luca, Compt. Rend., vol. 70, p. 408, 1870.

E. Brook Sungi Pait, from crater of Idjén volcano, Java. Analysis by F. A. Flückiger, Jahresb. Chemie, 1862, p. 820. Acid waters are not uncommon in Java.

F. Hot Lake, White Island, Bay of Plenty, New Zealand. Analysis by C. Du Ponteil, Ann. Chem. Pharm., vol. 96, p. 193, 1855. Practically a 10 per cent solution of hydrochloric acid.

G. Probably the same water as that of F. Analysis by W. Skey, Trans. New Zealand Inst., vol. 10, p. 423, 1877.

H. Cameron's Bath, Rotorua geyser district, New Zealand. Analysis by Skey, loc. cit. Contains 6 parts per million of H_2S.

I. Yellow lake or hot pool, crater of Taal volcano, Luzon, Philippine Islands.

J. Green lake or pool,[c] crater of Taal volcano. Analyses I and J by J. Centeno, Estudio geológico del volcán de Taal, Madrid, 1885. Obscurely stated. Recalculated on the assumption that "fosfato sódico" means Na_3PO_4, and that sulphuric acid means H_2SO_4 and not SO_3. The free acid, however, should probably be all hydrochloric, with no sulphuric at all. In this matter I have simply followed the author. Compare citation by G. F. Becker, Twenty-first Ann. Rept. U. S. Geol. Survey, pt. 3, p. 49, 1901.

	A.	B.	C.	D.	E.	F.	G.	H.	I.	J.
HCl, free	0.18	35.92	5.50	.....	43.96	65.42	69.99	5.60	.....	13.04
H_2SO_4, free	1.29	1.89	44.17	16.62	.....	.....	.....	59.11	5.87	2.48
H_3BO_3	2.73	.....	.....	.....	.....	.....	.....	.....	.....	.....
Cl	.....	4.75	4.96	.34	14.95	11.69	9.96	.....	47.26	44.52
SO_4	67.66	43.97	31.71	55.08	26.96	10.64	11.34	20.21	9.50	6.40
PO_4	.....	.....	.....	.....	.....	1.91	.....	trace	1.26	.73
B_4O_7	.....	.....	.....	.....	.....	trace	.....	.....	.....	.....
Na	.73	3.08	3.22	trace	1.32	.75	1.56	8.35	24.14	20.75
K	.24	.....	.....	.57	.39	.59	.90	.32	1.38	3.03
Li	.01	.....	.....	.....	.....	.....	.....	.....	.....	.....
NH_4	22.85	.....	.....	.58	.....	.....	.....	.....	.....	.....
Ca	1.18	2.45	1.21	2.91	2.05	2.30	.50	.47	.56	.22
Mg	.36	.....	2.31	.55	.94	.34	.09	.22	.98	1.02
Mn	.....	.....	.....	trace	.....	trace	.....	.....	.....	.....
Fe''	trace	.....	1.53	3.47	.....	.....	2.86	.....	.78	1.03
Fe'''	.....	.....	.....	.....	4.66	5.98	.....	.33	5.35	5.55
Al	.10	7.14	3.18	7.16	4.44	.35	2.62	trace	.55	.....
As	.....	.....	.....	trace	.....	.....	.....	.....	.....	.....
SiO_2	2.67	.80	2.21	12.72	.33	.03	.18	5.39	2.37	1.23
	100.00	100.00	100.00	100.00	100.00	100.00	100.00	100.00	100.00	100.00
Total impurity, parts per million	3,365	[d] 2,969	[e] 8,296	[f] 2,477	18,060	158,051	194,830	1,862	26,989	60,023

[a] As an ammoniacal water this may be compared with the borate water from Clear Lake, California, previously cited.

[b] Boussingault also gives analyses of several saline waters from the same region. On p. 81 he estimates that Rio Vinagre at Purace carries, each day, 46,873 kilograms of H_2SO_4 and 42,150 kilograms of HCl. These figures correspond to 17,000 and 15,000 metric tons per annum.

[c] For recent analyses of these Taal waters, see R. F. Bacon, Philippine Jour. Sci., vol. 1, p. 433, 1906; vol. 2, p. 115, 1907. Unfortunately, these analyses, which corroborate Centeno's, are stated in such form that I can not reduce them to the uniform standards.

For analyses of the California geysers, see Winslow Anderson, Mineral Springs and Health Resorts of California, pp. 136–153, San Francisco, 1892. Some of these waters are strongly acid.

[d] 2,959 with free SO_3 instead of H_2SO_4.

[e] 7,623 with free SO_3 instead of H_2SO_4.

[f] 2,936 with free SO_3 instead of H_2SO_4.

Still another acid water, from the crater of Popocatepetl, was partially analyzed by J. Lefort.[a] It contained 11.009 grams of hydrochloric acid and 3.643 of sulphuric acid in 1,000 parts, together with

[a] Compt. Rend., vol. 56, p. 909, 1863.

2.080 grams of alumina, 0.699 of soda, and 0.081 of ferric oxide. Lime, magnesia, silica, and arsenic were present in traces. These data are too incomplete to admit of systematic description. The total dissolved matter amounted to 17,512 parts per million.

J. B. Boussingault,[a] in his memoir on the acid waters of the Colombian Andes, discusses at some length the question of their origin. He shows that hydrochloric acid may be generated by the action of steam upon a mixture of chlorides and silica, and also that hot gaseous hydrochloric acid will liberate sulphuric acid from sulphates. Both of these reactions may take place in volcanoes. Sulphuric acid may also be formed by volcanic heat, sulphur, either free or derived from sulphides, first burning to SO_2, which afterwards, in presence of moisture, oxidizes to H_2SO_4. It is also to be borne in mind that aqueous sulphuric acid will decompose chlorides, with liberation of HCl, and this reaction also probably occurs. The acidity of a volcanic water, then, may be due to a variety of causes, which operate under varying conditions of material and temperature. We may not be able to say with certainty that a given water of this class originated in a given way, but we can see that the reactions which produce it are neither complex nor obscure.

SUMMARY OF WATERS.

From the evidence before us the classification of natural waters according to their negative or acid ions seems to be fully justified. This question has been partially discussed in previous chapters; but the greater variety of composition shown by mineral springs enables us now to cover the ground much more completely. The main divisions and subdivisions are as follows:

I. Chloride waters. Principal negative ion Cl.
- A. Principal positive ion sodium.
- B. Principal positive ion calcium.
- C. Waters rich in magnesium.

II. Sulphate waters. Principal negative ion SO_4.
- A. Principal positive ion sodium.
- B. Principal positive ion calcium.
- C. Principal positive ion magnesium.
- D. Waters rich in iron or aluminum.
- E. Waters containing heavy metals, such as zinc.

III. Sulphato-chloride waters, with SO_4 and Cl both abundant.

IV. Carbonate waters. Principal negative ion CO_3 or HCO_3.
- A. Principal positive ion sodium.
- B. Principal positive ion calcium.
- C. Chalybeate waters.

V. Sulphato-carbonate waters. SO_4 and CO_3 both abundant.

VI. Chloro-carbonate waters. Cl and CO_3 both abundant.

[a] Ann. chim. phys., 5th ser., vol. 2, p. 76, 1874.

VII. Triple waters, containing chlorides, sulphates, and carbonates in equally notable amounts.
VIII. Siliceous waters. Rich in SiO_2.
IX. Borate waters. Principal negative radicle B_4O_7.
X. Nitrate waters. Principal negative ion NO_3.
XI. Phosphate waters. Principal negative ion PO_4.
XII. Acid waters. Contain free acids.
A. Acid chiefly sulphuric.
B. Acid chiefly hydrochloric.

This classification is sufficient for all practical purposes, although it might be subdivided still further in order to cover certain exceptional cases, as, for example, the feebly acid ammonium sulphate water of the Devil's Inkpot. Many waters are obviously intermediate in character, like the brines containing both calcium and sodium, or the sulphates of two or more bases in something like equally important quantities. In a classification based on therapeutic considerations sulphur waters would form a distinct group; but sulphides occur in subordinate amounts, and from a chemical point of view are merely incidental impurities. It has already been observed that mixtures can not be classified rigorously, a conclusion which it is well to reiterate now. The classification of natural waters is only approximate, and a matter of convenience rather than of fixed principles.

CHANGES IN WATERS.

When the water of a spring emerges into the open air it begins to undergo changes. It may flow into other waters, and so lose its individuality; it may simply evaporate, leaving a saline residue; it may react upon adjacent material and so produce new substances; or, by cooling, it may deposit some one or more of its constituents. The first of these contingencies admits of no systematic discussion: the third will be considered in the next chapter, the others can receive attention now.

Alteration by loss of gaseous contents is observed in two important groups—the sulphur waters and those containing an excess of carbonic acid. Hydrogen sulphide partly escapes into the atmosphere without immediate change, and part of it is oxidized, with deposition of sulphur and the formation of thiosulphates and finally sulphates, which remain in solution. Deposits of finely divided sulphur are common around those springs which emit hydrogen sulphide, but they frequently contain other substances, such as silica, calcium carbonate, and ocherous matter. Since, however, the sulphur is a product of partial oxidation, this change comes more appropriately under the heading of reaction with adjacent material, the latter, in this case, being oxygen derived from the air. The *hydrogen sulphide* itself may be generated by the action of acid

waters upon other sulphides, but it is more commonly produced by the reduction of sulphates through the agency of organic matter, and the subsequent decomposition of the resultant alkaline compounds by carbonic acid. The last reaction, however, as A. Béchamp[a] has shown, is reversible. Carbon dioxide decomposes solutions of calcium hydrosulphide; but, on the other hand, hydrogen sulphide can partly decompose solutions of calcium carbonate. Bicarbonates and sulphides, therefore, can coexist in mineral waters in a state of unstable equilibrium.

CALCAREOUS SINTER.

With carbonated waters the changes due to escape of gas are more conspicuous, at least when calcium, magnesium, or iron happen to be the important basic ions. When the "bicarbonic" ion HCO_3 breaks up, losing carbon dioxide to the atmosphere, the normal calcium or magnesium carbonate is formed and, being insoluble, is precipitated. If we assume calcium bicarbonate as existent in solution, the reaction is as follows:

$$CaH_2C_2O_6 = CaCO_3 + H_2O + CO_2;$$

but the change is modified by other substances which may be present, and so the product is rarely pure, nor is the precipitation absolutely complete. Calcareous sinter, tufa, or travertine is thus produced, and in many localities it is an important deposit. The carbonate waters of the Yellowstone Park, for example, form large bodies of this character, and many analyses of it have been made. It is also abundant in the Lahontan and Bonneville basins, as mentioned in the preceding chapter. The following analyses of typical American material are sufficient to show its usual composition:

Analyses of calcareous sinters.

A. Travertine, Terrace Mountain, Mammoth Hot Springs, Yellowstone National Park. Analysis by F. A. Gooch, Bull. U. S. Geol. Survey No. 228, p. 323, 1904.

B. Travertine, near Pulsating Geyser, Mammoth Hot Springs. Analysis by J. E. Whitfield, Bull. U. S. Geol. Survey No. 228, p. 323, 1904. Other analyses of calcareous deposits are given in the same publication.[b]

C. Lithoid tufa, Lahontan basin, Nevada. One of three analyses by O. D. Allen, cited by I. C. Russell, Mon. U. S. Geol. Survey, vol. 11, p. 203, 1885.

D. Calcareous tufa, main terrace, Redding Spring, Great Salt Lake Desert. Analysis by R. W. Woodward, Rept. U. S. Geol. Explor. 40th Par., vol. 1, p. 502, 1878.

[a] Ann. chim. phys., 4th ser., vol. 16, p. 202, 1869. See also a recent physicochemical discussion by F. Auerbach, Zeitschr. physikal. Chemie, vol. 49, p. 217, 1904.

[b] See also W. H. Weed, Ninth Ann. Rept. U. S. Geol. Survey, p. 619, 1889.

	A.	B.	C.	D.
Insoluble	.....	.....	1.70	.....
SiO_2	0.09	0.05	.....	8.40
Al_2O_3	} .11	} .11	} .25	1.31
Fe_2O_3				trace
CaO	55.37	52.46	50.48	46.88
MgO	.35	.90	2.88	3.54
K_2O	.04	.71	.....	.22
Na_2O	.....	.33	.....	.48
Li_2O	.....	.....	.....	trace
NaCl	.10	1.45	.....	.....
Cl	.....	.....	trace	.....
SO_3	.44	1.82	trace	.....
CO_2	43.11	40.88	41.85	38.20
P_2O_5	.....	.....	.30	trace
H_2O	.32	1.02	2.07	1.71
C, organic	.17	.30	.....	.....
	100.10	100.03	99.53	100.24

Analyses of several European tufas are given by Roth,[a] and they exhibit many variations in composition. Ten calcareous deposits from the springs of Vichy were analyzed by J. Bouquet,[b] who found strontium and arsenic in them. The arsenic ranged from a trace to 1.16 per cent of As_2O_5. In the Carlsbad "Sprudelstein" Blum and Leddin[c] also found arsenic to the extent of 0.27 per cent. In a tufa from the Doughty Springs, in Delta County, Colorado, W. P. Headden[d] found barium sulphate ranging from a small amount up to nearly 95 per cent. This tufa or sinter was distinctly radioactive, and probably contained traces of radium. In short, the calcium carbonate precipitated from natural waters may carry down with it a great variety of impurities, which depend upon the character of the spring. Silica and ferric hydroxide are among the most common contaminations.

OCHEROUS DEPOSITS.

When ferrous ions are present in a carbonate water, loss of carbonic acid is followed or accompanied by oxidation, and the precipitated material is an ocherous ferric hydroxide. Around chalybeate springs these deposits of iron rust are always noticeable. Manganese hydroxide may be deposited in a similar way. With substances of this character calcium and magnesium carbonates are often thrown down, and also silica, so that the ochers from iron springs vary much in composition. Between an ocher and a calcareous sinter every intermediate

[a] Allgem. chem. Geol., vol. 1, p. 539.

[b] Ann. chim. phys., 3d ser., vol. 42, p. 332, 1854. For later analyses of Vichy deposits, see C. Girard and F. Bordas, Compt. Rend., vol. 132, p. 1423, 1901.

[c] Ann. Chem. Pharm., vol. 73, p. 217, 1850.

[d] Proc. Colorado Sci. Soc., vol. 8, pp. 1–30, 1905. Analyses of six of the springs are given in this memoir, and several analyses of sinters. On the coexistence of barium and sulphates in mineral waters see P. Carles, Jour. Chem. Soc., vol. 80 (abstracts), pt. 2, p. 506, 1901. Alkaline bicarbonates, with an excess of CO_2, can hold barium in solution, notwithstanding the presence of sulphates. R. Delkeskamp, in Notizbl. Ver. Erdkunde, 4th ser., Heft 21, p. 47, has discussed the occurrence of barium in natural waters and tabulated a large number of occurrences.

mixture may occur. Sometimes when sulphates have been reduced by organic matter sulphides of iron are deposited, and a number of examples of this kind are cited by Roth.[a] The following analyses will illustrate the usual character of these sediments:

Analyses of ocherous deposits.

A. Deposit from Driburg, Germany. Analysis by F. J. H. Ludwig, Jahresb. Chemie, 1847–48, p. 1012.

B. Deposit from Nauheim, Germany. Analysis by Ewald, Jahresb. Chemie, 1847–48, p. 1012.

C. Deposit from Enclos des Célestins, Vichy. One of four analyses by J. Bouquet, Ann. chim. phys., 3d ser., vol. 42, p. 336, 1854. The "quartz and mica" of course do not belong with the sediment, but are an accidental addition to it.

D. Deposit from Chalybeate Spring, Death Gulch, Yellowstone National Park. Analysis by J. E. Whitfield in the laboratory of the United States Geological Survey.[a]

	A.	B.	C.	D.
Fe_2O_3	57.303	49.86	47.40	63.03
Mn_2O_3	.....	.40	trace	.....
Al_2O_3	.....	.....	.....	.08
CaO	6.683	.....	.....	.....
$CaCO_3$	.....	20.81	10.85	.....
$MgCO_3$	.....	.....	6.03	.....
NaCl, etc	.....	2.59	.....	.....
SO_3	.543	.....	.....	8.35
P_2O_5	.....	.....	trace	.....
As_2O_3	.063	.....	.....	.....
As_2O_5	.....	.....	6.96	.....
Soluble SiO_2	.....	2.81	1.04	1.37
H_2O	23.333	23.53	25.72	26.94
Organic matter	.542	.....		
Sand	5.388	.....	.....	.....
Quartz and mica	.....	.....	2.06	.....
CO_2 and loss	6.145	.....	.....	.....
	100.000	100.00	100.06	99.77

[a] For an analysis of water from Death Gulch, see G. B. Frankforter, Jour. Am. Chem. Soc., vol. 28, p. 714, 1906.

The deposit represented by analysis D evidently contains an admixture of a basic sulphate of iron. A number of such salts are known among natural minerals, and they are all formed by deposition from chalybeate solutions. Their consideration, however, does not belong in this chapter.

SILICEOUS DEPOSITS.

Siliceous deposits are formed by all waters containing silica, but are commonly so small as to be inconspicuous. The silica then appears, as in the preceding tables of analyses, as an impurity in something else. From hot springs, however, which often contain silica in large quantities, great bodies of sinter are produced, and this has a composition approaching that of opal. Mineralogically, siliceous sinter is classed as a variety of opal, for it consists mainly of hydrated silica with variable impurities. According to W. H. Weed,[b] who has studied the formation of sinters in the Yellowstone Park,

[a] Allgem. chem. Geol., vol. 1, pp. 599, 600.

[b] Am. Jour. Sci., 3d ser., vol. 37, p. 351, 1889.

the deposit may be due either to relief of pressure, to cooling, to chemical reactions between different waters, to simple evaporation, or to the action of algæ. In the last case the silica forms a gelatinous layer upon the algous growths, and this, after the death of the algæ, gradually hardens to sinter. The subjoined analyses (A to E) of Yellowstone Park sinters are selected from among fifteen which were made by J. E. Whitfield in the laboratory of the United States Geological Survey.[a]

Analyses of sinters from Yellowstone Park, etc.

A. Incrustation, Excelsior Geyser Basin.
B. Opal deposit, Norris Basin.
C. Compact sinter, Old Faithful Geyser.
D. Deposit from Artemisia Geyser.
E. Geyserite incrustation, Giant group, Upper Basin.
F. Siliceous sinter, Steamboat Springs, Nevada. Analysis by R. W. Woodward, Rept. U. S. Geol. Explor. 40th Par., vol. 2, p. 826, 1877.

	A.	B.	C.	D.	E.	F.
SiO_2	94.40	93.60	89.54	83.10	72.25	92.67
Al_2O_3 }	.79	1.06	2.12	6.02	10.96	.80
Fe_2O_3 }		trace	trace	trace	.76	
FeO	.....	.....	.....	.....	.31	.....
CaO	none	.50	1.71	.80	.74	.14
MgO	none	trace	trace	.21	.10	.05
K_2O	.....	.....	.30	.87	1.66	.18
Na_2O	.....	.....	1.12	2.18	3.55	.75
NaCl	.....	.....	trace	.....	.36	.....
H_2O [a]	5.02	4.71	5.13	6.73	9.02	5.45
C	.....	.....	.....	.....	.20	.....
SO_3	.....	.....	trace	.28	.45	.....
S	.....	trace	.....	.....	.....	.....
	100.21	99.87	99.92	100.19	100.36	100.04

[a] Loss on ignition.

At Steamboat Springs G. F. Becker[b] found the deposits to contain also sulphides of antimony, arsenic, lead, copper, and mercury, ferric hydroxide, gold, silver, and traces of zinc, manganese, cobalt, and nickel.

The following analyses represent sinters from foreign localities:[c]

Analyses of sinters from foreign localities.

G. Geyserite, Iceland. Analysis by A. A. Damour, Bull. Soc. géol. France, 2d. ser., vol. 5, p. 160, 1847–48.

H. Deposits from the Scribla spring, Icelandic geysers. Analysis by C. Bickell, Ann. Chem. Pharm., vol. 70, p. 293, 1849.

I. Sinter from the hot springs of Taupo, New Zealand. Analysis by J. W. Mallet, Phil. Mag., 4th ser., vol. 5, p. 285, 1853.

J. Sinter from geysers of Rotorua, New Zealand. Analysis by J. E. Whitfield, discussed by W. H. Weed, Ninth Ann. Rept. U. S. Geol. Survey, p. 619, 1889. Two other analyses are given in this report.

[a] Bull. U. S. Geol. Survey No. 228, pp. 298–299, 1904. A very exceptional sinter, from a warm spring in Selangor, Malay States, contains, with 91.8 per cent of SiO_2, 0.5 per cent of SnO_2. See S. Meunier, Compt. Rend., vol. 110, p. 1083, 1890.

[b] *Mon. U. S.* Geol. Survey, vol. 13, pp. 343–346, 1888.

[c] *For additional analyses* see Roth, Allgem. chem. Geol., vol. 1, p. 593.

K. Sinter from the Mount Morgan gold mine, Queensland. Analysis by E. A. Schneider, discussed by W. H. Weed in Am. Jour. Sci., 3d ser., vol. 42, p. 166, 1891. This sinter is impregnated with auriferous hematite.[a]

	G.	H.	I.	J.	K.
SiO_2	87.67	88.26	94.20	92.47	94.02
Al_2O_3 }	.71	.69	1.58	2.54	2.27
Fe_2O_3 }		3.26	.17	.....	
MgO	.....	trace	.....	.15	trace
CaO	.40	.29	trace	.79	.07
K_2O	trace	.11	.....	.....	.....
Na_2O	.82	.11	.....	.....	.....
NaCl	.....	.....	.85	.....	.....
H_2O	10.40	4.79	3.06	3.99	3.36
SO_3	.....	2.49	.....	.....	.....
	100.00	100.00	99.86	99.94	99.72

[a] In sinters from the geyser district of New Zealand, according to J. M. Maclaren (Geol. Mag., 1906, p. 511), there are also appreciable quantities of gold and silver.

The sinters, however, represent only the simplest form of deposit from geysers and siliceous springs. A great variety of intermediate substances, mixtures of silica, of hydroxides, of carbonates, sulphates, or arsenates, and even of sulphur, have been observed, and a number of analyses made in the laboratory of the United States Geological Survey by J. E. Whitfield are cited below as illustrations of this fact. All of the samples analyzed were collected in the Yellowstone National Park.

Analyses of spring deposits from Yellowstone Park.

A. Deposit from spring No. 75, Norris Basin. Dried at 104°.
B. Saline deposit, Shoshone Geysers. Dried at 104°.
C. Sediment from Crater Hill.
D. Black coating, Fairy Springs. Air dried.
E. Deposit from Chrome Spring, Crater Hill.
F. Sedimentary deposit from Lamar River.
G. Deposit from Constant Geyser. Described by Arnold Hague in Am. Jour. Sci., 3d ser., vol. 34, p. 171, 1887. Contains scorodite.
H. Red, ocherous deposit, Arsenic Geyser. Air dried.

	A.	B.	C.	D.	E.	F.	G.	H.
SiO_2	54.36	50.03	54.22	21.36	68.73	29.23	49.83	41.20
Al_2O_3	5.90	2.15	18.03	3.11	3.66	trace	4.74	9.53
Fe_2O_3	25.48	trace	.86	9.17		1.91	18.00	19.35
MnO	.33	.....	.....	6.19	.....	.....	.....	.....
MnO_2	.....	.....	.....	38.65	.....	.....	.....	.....
MgO	.17	trace	trace	.82	.29	.07	.....	.....
CaO	1.86	trace	.32	7.50	2.14	.50	.....	.....
Na_2O	1.30	24.18	.49	.....	.....	.....	.....	.....
K_2O	1.21	.32	3.82	.....	.....	.....	.....	.....
Li_2O	none	.24	.....	.....	.....	.....	.....	.....
H_2O	9.60	4.78	7.12	13.02	6.15	3.03	10.62	15.70
CO_2	.....	12.92	.....	.....	.....	.....	.....	.....
SO_3	.....	5.40	15.41	.09	.....	.....	.....	.24
S	.....	.....	.....	.....	18.79	64.29	.....	.....
As_2O_5	.28	.....	.....	.....	none	.....	17.37	14.08
C, organic	.....	.....	.....	.....	.....	1.04	.....	.....
	100.49	100.02	100.27	99.91	99.76	100.07	100.56	100.10

Analyses G and H are especially interesting, for they represent the deposition of *scorodite*, $FeAsO_4.2H_2O$. This occurs still more per-

fectly at Joseph's Coat Springs, in the Yellowstone Park, where the mineral has been separated from an incrustation and identified.[a] The manganese in D and the sulphur in E and F are also worthy of notice. When we consider that in addition to these precipitates many saline compounds are produced by the simple evaporation of waters, we see that the range of possibilities must be very great. When a water has become sufficiently concentrated to begin the deposition of solid matter, every change in concentration or temperature introduces a new set of conditions which determine the nature of the compounds to be formed. The complexity of the problems which thus originate will become more evident when we study the subject of saline residues. It is clear, from the nature of the products thus far considered, that in a complex water several reactions may take place simultaneously, a number of substances being thrown down at the same time. If a water carrying much iron and much calcium loses hydrogen sulphide and carbonic acid, then ferric hydroxide, calcium carbonate, and sulphur will be deposited together, each change being independent of the others. In such cases the complexity of reaction is apparent only, and not real. The reactions are all simple and easily understood. When salts are formed by evaporation of a water, the interpretation of the phenomena is more difficult.

REACTIONS WITH ADJACENT MATERIAL.

The reactions of natural waters in contact with adjacent materials are of many different kinds. We have already seen how oxygen from the atmosphere may convert ferrous into ferric compounds and sulphides into sulphates, but reducing agents also must be taken into account. The sulphates of a water, by accession of organic matter, can be partly or entirely reduced to sulphides, and carbonic acid, acting upon the latter, may expel sulphureted hydrogen and produce carbonates. By reactions of that kind a water can undergo a complete change of type and pass from one class into another.

Acid waters, especially when hot, act vigorously on the substances with which they come in contact, producing soluble chlorides or sulphates according to their character. Hydrochloric acid forms the one set of salts, sulphuric acid the other. The extent of the reactions will of course depend upon the kind of material attacked, for some minerals and rocks are much more soluble than others. The carbonate rocks are naturally the most attackable, but no rock is entirely exempt from changes of this order. When we remember that even pure and cold water exerts a solvent action upon many silicates, we can see how violently corrosive a hot, acid, volcanic water must be. Wherever

[a] *A. Hague. Am. Jour. Sci.*, 3d ser., vol. 34, p. 171, 1887. See also J. E. Whitfield, Bull. *U. S. Geol. Survey No.* 55, p. 65, 1889.

waters of this class occur the surrounding rocks are more or less decomposed, calcium, magnesium, alkalies, and iron being dissolved out, while silica and hydrous aluminum silicates remain behind. As the water cools and as the acid becomes neutralized its activity decreases, and its peculiar characteristics gradually disappear. An ordinary saline or astringent water is the product of these changes, which take place most rapidly when the active solutions are concentrated and hot and more slowly in proportion as they are diluted or cooled.

Waters containing free sulphuric or hydrochloric acid are, however, relatively rare, and their geological importance is small compared with that of carbonated solutions. Meteoric waters carrying free carbonic acid are probably the most powerful of agents in the solution of rocks, although their chemical activity is neither violent nor rapid. Being continually replenished from the storehouse of the atmosphere, their work goes on unceasingly over a large portion of our globe. The calcium which they extract from rocks is carried by rivers to the sea, and is finally deposited in the form of limestones. Springs and underground waters charged with carbonic acid exert the same solvent action, but locally and in different degree. We have seen that many springs are so heavily loaded with carbonic acid that they effervesce when issuing into the air, and such waters are peculiarly potent in effecting the solution of limestones. By percolating waters of this class limestone caverns are made, and part of the substance dissolved is redeposited as stalactite or stalagmite. In reactions of this kind the general character of a water is not changed; it may be a calcium carbonate water throughout its course, varying only in gaseous content and in concentration, and its chemical effectiveness is shown by its work as a carrier in transporting from one point to another the material that it has dissolved.

Alkaline waters, especially thermal waters of the sodium carbonate class, are also active solvents of mineral substances. Their tendency, however, is opposite to that of the acid waters, for they dissolve silica rather than bases, and act as precipitants for magnesia and lime. When solutions of calcium sulphate and sodium carbonate are commingled, calcium carbonate is thrown down and an equivalent amount of sodium sulphate remains dissolved. Since natural waters are rarely, if ever, chemically equivalent, reactions of this sort between them are necessarily incomplete, and the blended solutions will contain one group of ions in excess over the other. Thus a water of mixed type is produced, but the mixture is not an average of the two solutions, for part of their original load has been removed. This is a simple case of reaction, but it may be complicated in various ways, and even reversed. For instance, a solution of sodium sulphate in presence of free carbonic acid will dissolve calcium car-

bonate, forming sodium bicarbonate and a precipitate of gypsum. E. W. Hilgard[a] has investigated this transformation, and regards it as the principal source of alkaline carbonate solutions in nature. Furthermore, mineral substances with which alkaline waters come in contact may be profoundly modified, as at the thermal springs of Plombières in France. Here, according to Daubrée,[b] the brickwork and masonry of the ancient Roman baths have been strongly attacked with the production of hyalite and a number of zeolitic minerals.

Many mineral springs contain organic matter, presumably in the form of the so-called humus acids, but the influence exerted by these substances is more pronounced in swamp and river waters.[c] Their solvent action on rocks and soils has been already noticed, as well as the fact that they also tend to retain silica in solution. Their effect is appreciable, but the precise nature of the compounds which they form is not certainly known.

Furthermore, iron and alumina may be removed from sulphate or chloride waters by the action of limestones. If the iron is in the ferrous state, it must first be oxidized to the ferric condition. Then, by means of calcium carbonate, both of the bases named can be precipitated, either as hydroxides or as basic sulphates. Insoluble compounds of the latter class are often formed from natural waters, and many mineral species are of that character. It is quite probable that limestone is also effective in removing other heavy metals from their solutions; copper, for example, is certainly thrown down, but these reactions need to be more fully investigated. Their consideration must be deferred until we reach the subject of metalliferous deposits.

Finally, the character of a water may be greatly changed by simple percolation through the soil. That potassium is thus removed from natural waters has long been known, and reference to this fact was made in a previous chapter. Experiments by J. T. Crawley and R. A. Duncan[d] on Hawaiian soils show that a layer 6 inches thick will fix over 98 per cent of the potassium in a solution of potassium sulphate which is allowed to filter through it, and the retention of phosphoric acid and ammonia is even more complete. According to J. M. van Bemmelen,[e] basic zeolitic silicates are the chief agents in effecting the retention of potassium, exchanging other bases for it

[a] Am. Jour. Sci., 4th ser., vol. 2, p. 100, 1896.

[b] Études synthétiques de géologie expérimentale, pp. 179 et seq., 1879. Other localities at which similar changes have been observed are also described. The Plombières water is said to be a very dilute solution of alkaline silicates, but its exact composition is not given by Daubrée. Analyses of six waters from Plombières can be found in Les eaux minérales de la France, by E. Jacquot and E. Willm, p. 224, Paris, 1894. They confirm Daubrée's statement.

[c] See Chapter III, pp. 82–84, for details on this subject. Also A. A. Julien, Proc. Am. Assoc. Adv. Sci., vol. 28, p. 311, 1879.

[d] Jour. Am. Chem. Soc., vol. 25, p. 47, 1903. See also vol. 24, p. 1114, 1902.

[e] Landw. Versuchs-Station. (Berlin), vol. 21, p. 135.

by double decomposition, but the existence of such compounds in the soil is not well established. Hydrous aluminum silicates may be the effective absorbents, or, in the case of phosphoric acid, the hydroxides of aluminum and iron. After potassium and ammonium, Van Bemmelen finds that magnesium is most readily absorbed, then sodium, and calcium least of all. It is clear, however, that the nature of the soil must be taken into account. A sandy soil or an impervious clay would be less effective in removing saline substances from water than a loose loam rich in hydrous basic compounds. The fact that substances are taken from waters by soils is certain, but the extent of the absorption depends upon local conditions. It is also certain that potassium, rather than sodium, is thus withdrawn from aqueous circulation.

A careful consideration of all the evidence concerning mineral springs will show that it is exceedingly difficult to generalize on relations between the composition of a water and its geological history. Reactions which take place deep within the earth can not easily be traced, especially as a water may undergo various modifications before it reaches the surface. A spring may be a blend from different sources—either a direct mixture or a solution from which ingredients have been removed—and it is only in specific cases that a simple interpretation of the phenomena can be found. The water that rises from a salt bed or from gypsum is easily understood, and so also is one which carries sulphates derived from pyritiferous shales. The Hunyadi Janos water is obtained from wells sunk near a mass of pyritiferous dolomite, and therefore its high proportion of magnesium sulphate is readily intelligible. We can see that a water from granite must differ greatly from one issuing out of limestone, and Hanamann's analyses of the Bohemian rivers illustrate this order of dissimilarity. Many regularities can be traced, but no general principle can be deduced from them. For example, A. De Lapparent[a] shows that solfataras are most common in regions of highly siliceous eruptive rocks, such as rhyolites, andesites, etc., a condition which he attributes to the inferior fluidity of the volcanic magmas and the consequently greater retention of gaseous contents by them. In areas of subsilicic rock solfataras rarely or never occur.

Various attempts have been made to correlate the composition of waters with the geological horizons from which they flow. For spring waters such attempts are of little value, because two springs, side by side, may be widely different. In the case of artesian wells the problem is perhaps simpler, for there the horizon can be determined. Artesian waters of common origin often show a family likeness to one another, especially in their minor constituents, one group

[a] Compt. Rend., vol. 108, p. 149, 1889.

being always calciferous, another relatively rich in bromine, and so on.[a] But no law can be framed to cover even these regularities, for the exceptional waters are too numerous and too confusing. That waters from sedimentary rocks are, as a rule, more concentrated and perhaps more complex than those from the older crystalline formations is doubtless true; but beyond that it is hardly safe to generalize. It is better to discuss each water by itself, and so seek to unravel its individual history.

VADOSE AND JUVENILE WATERS.

Whether it is possible to discriminate between waters of superficial or vadose origin and magmatic or deep-seated waters is a question for geology to answer. Until quite recently the prevalent opinion has been that all spring waters, including those emitted by geysers, were originally meteoric. Modern investigations into volcanism and upon the subject of metalliferous veins have, however, led to a reopening of the question. E. Suess,[b] speaking with especial reference to the thermal springs of Carlsbad, has advanced strong arguments to show that waters of this class are "juvenile" and now see the light of day for the first time—that is, they issue from deep within the earth, from the fundamental magma itself, and bring up veritable additions to the hydrosphere. These magmatic waters, furthermore, are regarded by some authorities as the carriers of metallic salts, by which certain kinds of metalliferous veins have been filled.[c]

THERMAL SPRINGS AND VOLCANISM.

The recent researches of Armand Gautier[d] have indicated a very close connection between volcanism and the formation of thermal springs. His work will be considered more in detail in a later chapter, but his general conclusions may be cited now. When a crystalline rock, like granite, is heated to redness in vacuo, water and gases, the latter identical in character with the volcanic gases, are given off. For instance, to cite the least significant example, 1 cubic kilo-

[a] A. C. Lane, Water-Sup. and Irr. Paper No. 31, U. S. Geol. Survey, 1899, classifies the Michigan waters with reference to their origin, and points out various similarities connected with identity of horizon. On the chemical relations between spring waters and the rocks from which they issue, see M. Dittrich, Mitth. Badisch. geol. Landesanstalt, vol. 4, p. 199, 1901.

[b] Geog. Jour., vol. 20, p. 520, 1902. From a German original, which I have not seen. On the other hand, see E. H. L. Schwartz, Geol. Mag., 1904, p. 252; and J. M. Maclaren, idem, 1906, p. 511. These writers regard the hot waters of Africa and New Zealand as originally vadose. The same conclusion is reached by Arnold Hague relative to the geyser waters of the Yellowstone National Park. See Scribner's Mag., May, 1904, p. 513, and Trans. Am. Inst. Min. Eng., vol. 16, p. 783, 1887.

[c] See for example, W. Lindgren, Eng. and Min. Jour., vol. 79, p. 460, 1905. Also A. C. Spencer, Trans. Am. Inst. Min. Eng., vol. 35, p. 473, 1905; vol. 36, p. 364, 1906.

[d] *Ann. Mines*, 10th ser., vol. 9, p. 316, 1906. A good abstract by F. L. Ransome is given in *Econ. Geol.*, vol. 1, p. 688, 1906.

meter of granite can yield from 25 to 30 millions of metric tons of water, which at 1,100° would form 160,000,000,000 cubic meters of steam. In addition to this enormous volume of vapor 28,000,000,000 cubic meters of other gases would be emitted. Suppose, now, that by fissuring and subsidence in the lithosphere such a mass of rock were carried down to a depth of 25,000 to 30,000 meters. It would then be in the heated region, and the evolution of vapors under great pressures would occur. To some such changes Gautier ascribes the phenomena of volcanism, with all its development of solfataras and fumaroles. Ordinary thermal springs may be formed by the same process, operating, perhaps, less violently, and originate, so to speak, from a sort of distillation of the combined water contained in the depressed masses of rock. In an earlier memoir [a] Gautier has shown that granite, heated with water in a sealed tube to a temperature between 250° and 300°, yields solutions containing sulphur compounds and resembling the sulphur waters of hot springs. This sulphur he ascribes, not to the decomposition of metallic sulphides, but to reactions upon sulpho-silicates, a class of compounds represented in nature by haüynite and lazurite,[b] and also by certain artificial substances which Gautier himself has prepared. He also supposes that carbon oxysulphide, COS, may be formed in the terrestrial nucleus, possibly from carbon monoxide generated by reactions between oxides and metallic carbides. Here he enters the field of speculation, where it is not necessary for us to follow him. The reactions which he has experimentally established are sufficiently suggestive, and his broad general conclusions are entitled to the most respectful consideration.

And yet, notwithstanding all that has been written on the subject, the controversy over the genesis of hot springs is not closed. What is the origin of the carbon dioxide with which so many mineral waters are heavily charged? In some instances, doubtless, it is derived from the decomposition of limestones, but in others this explanation can not suffice. Here and there it may be, to use Suess's expression, "juvenile," and evidence of the deep-seated origin of a spring.[c] Again, whence comes the sodium chloride of waters that flow from sources where it could not have been previously laid down? These questions, and others like them, still await satisfactory answers. With mere suppositions, however plausible they may seem, we can not be content.

---

[a] Compt. Rend., vol. 132, p. 740, 1901.

[b] Helvite and danalite are other natural sulpho-silicates which might easily take part in the supposed reactions.

[c] On vadose and juvenile carbonic acid in waters, see an elaborate discussion by R. Delkeskamp, Zeitschr. prakt. Geol., 1906, p. 33; reviewed by W. Lindgren, Econ. Geol., vol. 1, p. 602, 1906.

BIBLIOGRAPHIC NOTE.

The following collections of water analyses will be found useful for reference:

F. RASPE. Heilquellen-Analysen, Dresden, 1885. A very large collection of analyses, mainly of European mineral waters.

T. E. THORPE. Dictionary of Applied Chemistry, article "Water," vol. 3, pp. 952–959, 1893. Tables of analyses of European mineral springs. The same article gives much information about other waters.

J. K. CROOK. The Mineral Waters of the United States, New York and Philadelphia, 1899.

A. C. PEALE. The mineral springs of the United States: Bull. U. S. Geol. Survey No. 32, 1886.

F. A. GOOCH and J. E. WHITFIELD. Analyses of waters of the Yellowstone National Park: Bull. U. S. Geol. Survey No. 47, 1888.

E. ORTON. Rock waters of Ohio: Nineteenth Ann. Rept. U. S. Geol. Survey, pt. 4, p. 633, 1898. Contains many analyses of deep wells from various horizons.

W. H. NORTON. Artesian wells of Iowa: Iowa Geol. Survey, vol. 6, pp. 117–428, 1896.

J. H. SHEPHERD. Artesian wells of South Dakota: Bull. No. 41, Agric. Exper. Sta., South Dakota, 1895.

J. C. BRANNER. Mineral waters of Arkansas: Ann. Rept. Geol. Survey Arkansas, 1891, vol. 1.

E. H. S. BAILEY and others. The mineral waters of Kansas: Univ. Geol. Survey Kansas, vol. 7, 1902.

P. SCHWEITZER. A report on the mineral waters of Missouri: Geol. Survey Missouri, vol. 3, 1892.

W. S. BLATCHLEY. The mineral waters of Indiana: Twenty-sixth Ann. Rept. Indiana Dept. Geology and Nat. Resources, pp. 11–225, 1901.

A. C. LANE. The mineral waters of lower Michigan: Water-Sup. and Irr. Paper No. 31, U. S. Geol. Survey, 1899.

W. ANDERSON. Mineral Springs and Health Resorts of California, San Francisco, 1892. Contains many analyses, the greater number of them by the author.

L. DE LAUNAY. Recherché, captage et aménagement des sources thermo-minérales, Paris, 1899.

A. CARNOT and others. Analyses of French and colonial mineral waters: Ann. mines, 8th ser., vol. 7, p. 79, 1885; 9th ser., vol. 6, p. 355, 1894; vol. 16, p. 33, 1899. These three papers contain 584 analyses.

E. JACQUOT and E. WILLM. Les eaux minérales de la France, Paris, 1894. Many analyses and descriptions of the springs.

—— GUYON. Études sur les eaux thermales de la Tunisie, Paris, 1864.

A. RAIMONDI. Aguas minerales del Perú: El Perú, estudios mineralógicos y geológicos, vol. 4, pp. 235–394, 1902.

L. DARAPSKY. Aguas minerales de Chile, Valparaiso, 1890.

E. ABELLA Y CASARIEGO and J. DE VERA Y GÓMEZ. Estudio descriptivo de algunas manantiales minerales de Filipinas, Manila, 1893.

A. LIVERSIDGE, W. SKEY, and G. GRAY. Rept. Australasian Assoc. Adv. Sci., *1898, pp. 87–108.* A collection of analyses of Australasian mineral waters.

Many other analyses of waters are scattered through the periodical literature of chemistry, geology, pharmacy, and medicine, and the reports of geological surveys. The publications of agricultural experiment stations also contain much material relative to artesian, well, spring, ground, and drainage waters. Daubrée's three volumes on "Les eaux souterraines" contain few analyses, but much systematic information upon mineral springs. T. Sterry Hunt, in his "Chemical and Geological Essays," also has much to say upon the origin of natural waters and their chemical relations to one another.

CHAPTER VII.

SALINE RESIDUES.

DEPOSITION OF SALTS.

When a natural water is concentrated by evaporation, it deposits its saline constituents in the reverse order of their solubility, the least soluble first, the most soluble last of all. The process, however, is not so simple as it might appear to be, for the solubility of a salt in pure water is one thing, and its solubility in the presence of other compounds is another. Each substance is affected by its associates, and its deposition is partly a matter of concentration and partly a question of temperature. In general, the character of a saline deposit can be predicated from the character of the water which yields it; a chloride water gives chlorides, a sulphate water sulphates, and waters of mixed type furnish mixtures of compounds or even double salts. The more complex the water the greater becomes the range of possibilities.

We have already seen, in our studies of river, sea, and spring waters what a variety of reactions lead to the deposition of insoluble sediments. By this expression I do not mean sediments of suspended matter, like clays, but precipitates from solution, such as sulphur, hydroxide of iron, sinters, tufas, and so on. These substances represent something more than the results of simple evaporation, for they are produced by chemical changes, like oxidation, loss of carbonic acid, etc. We have now to consider the consequences of evaporation itself, and of the opposite process, re-solution, in which nothing is added to or taken away from the reacting system but water, except in so far as the soluble salts are successively deposited and so removed from the sphere of chemical change. In salt and alkaline lakes we can recognize several stages of this process—the precipitation of the relatively insoluble calcium sulphate, then of salt or sodium sulphate, the production of bitterns, like the water of the Dead Sea, and finally of solid beds of various saline materials. What are these saline residues, and what conditions govern their formation?

The most important of these substances, considering the magnitude of the deposits, are sodium chloride and calcium sulphate, and their *most probable* origin is the evaporation of sea water or its equivalent

in either ancient or modern times. The two compounds are commonly associated the one with the other, but not invariably, for gypsum is sometimes derived from other sources, and rock salt may be dissolved and washed away from a given locality, perhaps to be redeposited elsewhere. Still, the concentration of salt water, either from the ocean or from lakes, is the principal source of these deposits, and that phenomenon we may well consider in detail. The process has been going on from Silurian time down through all the intervening ages to the present day, and it can be observed in actual operation in many accessible localities. A salt lake dries up, or a body of water is cut off from the sea by a bar, and so permitted to evaporate, and a bed of salt is formed. Such beds are lenticular in form—thick at the centers, where the water was deepest, and thinning out toward the edges; and they show, as a rule, the same alternations of material, but with variations in regard to completeness. In general, the following alternations are observed: First, precipitates are formed, such as were considered in our discussion of mineral springs; then calcium sulphate is deposited, then salt, and finally, under exceptionally favorable conditions, layers of the more soluble compounds which characterize ordinary bitterns. This order, however, is subject to seasonal disturbances. In the concentration of a salt lake the deposits vary with the temperature, the summer and winter phenomena being often unlike. Again, evaporation goes on during a dry season, to be interrupted by a flood; and in the latter case layers of silt are deposited from time to time over the saline compounds that had previously formed. Alternations of gypsum, salt, and clay are exceedingly common in saline deposits. In a lagoon, cut off from the ocean, a break of the sandy barrier or an exceptionally high tide may admit a fresh supply of material for concentration, and so interrupt the continuity of the process. Any change of conditions will cause a corresponding change in the character of the substance laid down. Evidently each bed of salt should be studied individually, if its history is to be understood; but the general phenomena in the concentration of sea water appear more or less completely in every case and in essentially the same order.

CONCENTRATION OF SEA WATER.

In 1849 J. Usiglio[a] published an elaborate study of saline deposits from Mediterranean water, the samples having been taken at sea, near Cette, but several miles from shore and at a depth of 1 meter. The water itself was analyzed, the order and quantity of the salts deposited at various concentrations were determined, and analyses were also made of three bitterns, representing different densities and

[a] Ann. chim. phys., 3d ser., vol. 27, pp. 92, 192, 1849.

different stages of the process. The four analyses, reduced to ionic form and to percentages of total solids, appear as follows:

Analyses of Mediterranean water and bitterns.

A. The water itself, density 1.0258.
B. Bittern of density 1.21.
C. Bittern of density 1.264.
D. Bittern of density 1.32.

	A.	B.	C.	D.
Cl	54.39	56.18	49.99	49.13
Br	1.15	1.22	2.68	3.03
SO_4	7.72	5.78	14.64	17.36
CO_3	.18	.....	.....	.....
Na	31.08	32.06	20.39	12.89
K	.71	.78	2.25	3.31
Ca	1.18	.26	.....	.....
Mg	3.39	3.72	10.05	14.28
	100.00	100.00	100.00	100.00
Salinity, per cent	3.766	27.546	33.712	39.619

The determinations of bromine in these analyses are obviously excessive and those of potassium are low, but otherwise the data in the first column, considering the time when they were made, agree fairly well with the more recent figures given in Chapter III of this volume. They show, first, the elimination of calcium as carbonate, and later as sulphate, then the deposition of sodium chloride, and finally the accumulation of the more soluble substances in the mother liquors.

In his study of saline deposition Usiglio started with 5 liters of sea water, and determined the character and quantity of the salts laid down at successive stages of concentration. In the following table the results of his experiments appear, but are reduced to the initial unit volume of 1 liter. The quantities given are in grams.

Salts laid down in concentration of sea water.

Density.[a]	Volume.	Fe_2O_3.	$CaCO_3$.	$CaSO_4$ $2H_2O$.	NaCl.	$MgSO_4$.	$MgCl_2$.	NaBr.	KCl.
1.0258	1.000	.....	.....	.....	.....	.....	.....	.....	.....
1.0500	.533	0.0030	0.0642	.....	.....	.....	.....	.....	.....
1.0836	.316	.....	trace	.....	.....	.....	.....	.....	.....
1.1037	.245	.....	trace	.....	.....	.....	.....	.....	.....
1.1264	.190	.....	.0530	0.5600	.....	.....	.....	.....	.....
1.1604	.1445	.....	.....	.5620	.....	.....	.....	.....	.....
1.1732	.131	.....	.....	.1840	.....	.....	.....	.....	.....
1.2015	.112	.....	.....	.1600	.....	.....	.....	.....	.....
1.2138	.095	.....	.....	.0508	3.2614	0.0040	0.0078	.....	.....
1.2212	.064	.....	.....	.1476	9.6500	.0130	.0356	.....	.....
1.2363	.039	.....	.....	.0700	7.8960	.0262	.0434	0.0728	.....
1.2570	.0302	.....	.....	.0144	2.6240	.0174	.0150	.0358	.....
1.2778	.023	.....	.....	.....	2.2720	.0254	.0240	.0518	.....
1.3069	.0162	.....	.....	.....	1.4040	.5382	.0274	.0620	.....
Total deposit		.0030	.1172	1.7488	27.1074	.6242	.1532	.2224	.....
Salts in last bittern		.....	.....	.....	2.5885	1.8545	3.1640	.3300	0.5339
Sum		.0030	.1172	1.7488	29.6959	2.4787	3.3172	.5524	.5339

[a] *Given by Usiglio* in Baumé degrees. Restated here in the usual specific gravities.

Upon further concentration of the mother liquors Usiglio obtained variable results. Mere cooling from the temperature of day to that of night was sufficient to precipitate additional magnesium sulphate, which redissolved partially the day following. After that more salt was thrown down, then the double sulphate of magnesium and potassium, next the double chloride of the same metals, and finally magnesium chloride crystallized out. In the table of results just given the order of deposition is clearly shown. First, ferric oxide and calcium carbonate; then gypsum; then salt, the latter beginning to appear when the water had been concentrated to about one-tenth of its original volume.

In its general outlines, then, the concentration of sea water is a simple phenomenon, but in its details it may be very complex. The localities at which it can be completely traced are comparatively few and the natural records of it are, as a rule, defective. The mother liquors are easily drained or washed away, leaving no trace of their existence, and some saline deposits have been partially redissolved and laid down with modified composition elsewhere. Salt and gypsum may thus be separated, and so the normal order of their association becomes disturbed. Beds of salt, therefore, may be divided into classes—as primary and secondary, or as complete and incomplete, according to their saline character or the evidences of their origin. Of all known localities the region around Stassfurt, in Germany, gives us the best record of the complete, or nearly complete, process, and as it has been studied with unusual thoroughness we may properly consider it in some detail.

Ocean water, as we have already seen, contains on the average about 3.5 per cent of solid matter in solution, so that the mere evaporation of a closed lagoon would give a layer of salt of only moderate thickness. But salt deposits may be enormously thick—a thousand meters or more, as at Sperenberg, near Berlin—and the existence of such masses requires some explanation. For this purpose we must assume that large quantities of brine have accumulated within a limited space, such as a deep valley, like that of the Dead Sea, or behind a bar, as suggested by G. Bischof,[a] and more recently by C. Ochsenius.[b] The theory developed by Ochsenius is briefly as follows: Let us imagine a deep bay, connected with the sea by a narrow and shallow channel, but otherwise cut off from oceanic circulation by a bar. If no large streams enter the bay the outflow from it will be small, but sea water can enter freely to offset the losses due to evapora-

[a] Lehrb. chem. phys. Geol., 2d ed., vol. 2, p. 48, 1864.

[b] Die Bildung der Steinsalzlager und ihrer Mutterlaugensalze, Halle, 1877. See also a short paper in Proc. Acad. Nat. Sci. Philadelphia 1888, p. 181. Ochsenius was sharply criticized by J. Walther in Das Gesetz der Wüstenbildung, Berlin, 1900. Ochsenius replied in Centralbl. Min. Geol. Pal., 1902, pp. 551, 557, 620; and a rejoinder by Walther appeared in the same journal, 1903, p. 211.

tion. Evaporation, of course, takes place only at the surface, and the upper layers, thus becoming denser, must sink, so producing a saline concentration at the bottom. In this manner, being continually supplied with new material from without, the salinity of the bay will gradually increase until saturation is reached and the deposition of salt begins. So long as salt water can enter the bay this process will continue, and the depths of the basin will, in time, become a solid mass of salts, covered with a sheet of bittern. If, meanwhile, an elevation of the land takes place, separating the bay completely from the ocean, evaporation may proceed to its limit and the mother liquor will deposit its contents. In the Karaboghaz and other bays on the eastern shore of the Caspian Sea the process of saline concentration can now be observed in actual operation; but only part of the programme has yet been performed.

This theory of Ochsenius, however, is not the only one possible to account for the concentration of salt. It must be remembered that salt is not deposited from sea water until the latter has been concentrated to about one-tenth of its original volume. Suppose, now, a large sheet of water to be cut off from the ocean by any change in the level of the land, and also that it contains within its area a deep depression. In that depression the water will gradually become concentrated, and its saline load will tend to accumulate there. A layer of salt would thus form of much greater thickness than if evaporation took place over a comparatively level bottom, and if the surface area of the depression were small in comparison with that of the original sheet of water, the depth of the deposit might be very great. Such a deposit might also be reenforced by leachings from other salt beds, or from diffused salt in adjacent areas, a process which is now going on in the valley of the Dead Sea.

THE STASSFURT SALTS.

In the Stassfurt, or, more properly, the Magdeburg-Halberstadt region, the order of deposits is as follows, going from the surface downward:[a]

1. Drift, about 8 meters thick.
2. Shales, sandstones, and unconsolidated clays, of varying thickness.
3. Younger rock salt, thickness very variable, sometimes missing.

[a] From data given by H. Precht in Die Salz-Industrie von Stassfurt und Umgegend, 1889; L. Loewe, Zeitschr. prakt. Geol., 1903, p. 331; H. M. Cadell, Trans. Edinburgh Geol. Soc., vol. 5, p. 92, 1884; and G. Lunge in Thorpe's Dict. Applied Chem., vol. 3, p. 265. See also C. Ochsenius, on Loewe's paper, Zeitschr. prakt. Geol., 1904, p. 23; and on the potash salts, idem, 1905, p. 167. J. Westphal (Zeitschr. Berg., Hütten. u. Sal. Wesen preuss. St., vol. 50, p. 1, 1902) has given a history of the Stassfurt works. An important monograph is that of E. Pfeiffer, Handbuch der Kali-Industrie, Braunschweig, 1887. For a paper by J. Currie, see Trans. Edinburgh Geol. Soc., vol. 8, p. 403, 1905. Other references may be found in a bibliography of saline minerals, Zeitschr. prakt. Geol., 1905, p. 183.

4. Anhydrite, rarely lacking, 30 to 80 meters thick.
5. Salt clay, average thickness 5 to 10 meters, very rarely absent.
6. The carnallite zone, from 15 to 40 meters thick. At Douglashall a layer of rock salt intervenes between the carnallite and the clay. In parts of the field kainite overlies the carnallite, is itself overlain by "sylvinite" or "hartsalz," and that in turn by schoenite. These subzones are often missing.
7. The kieserite zone.
8. The polyhalite zone.
9. Older rock salt and anhydrite. Nos. 7, 8, and 9 have a total thickness ranging from 150 to perhaps 1,000 meters. The anhydrite forms layers, averaging 7 centimeters thick, separating the salt into sheets of 8 or 9 centimeters. These layers have been interpreted as annual deposits, due possibly to seasonal variations in temperature or to alternating drought and rain. If this supposition is correct, a Stassfurt salt bed 900 meters thick would require ten thousand years to form.
10. Anhydrite and gypsum.

We have now a complete record of the saline deposition at Stassfurt, ranging from the calcium sulphate at the bottom to the mother liquor or carnallite salts at the top. Above the carnallite a protecting layer of clay was laid down; and, after that, probably, a new accession of sea water began the formation of a second series of beds.[a] This younger salt and its underlying anhydrite represent this later period, which has no chemical relation to the first. So much for the broad outlines. Now let us pass on to the details of the record.

In the Stassfurt deposits more than thirty saline minerals are found, some abundantly and some sparingly. Several of them are regarded as primary minerals; others are derived from these by secondary reactions; a few of the species are simple salts, but the greater number are double compounds. Chlorides, sulphates, and borates are the characteristic substances, but in kainite we have a mixed salt containing two acid radicles, and the rare sulphoborite is another example of similar complexity. Carbonates are represented but sparingly, and their normal occurrence is probably that of the "stinkstone," or bituminous limestone, which has been found beneath the anhydrite. Native sulphur, derived from anhydrite by the reducing action of organic matter, is sparingly present in the salt clay,[b] and pyrites, also, is sometimes found in the deposits.

[a] Some writers regard the younger salt as having been formed by re-solution of older salt and redeposition here. As the discussion is geological and not chemical, it is unessential to our present purposes.

[b] Pfeiffer, Arch. Pharm., 3d ser., vol. 27, p. 1134, 1890.

The essential compounds are chlorides and sulphates, and as the latter are represented by the oldest of the important strata they may be considered first. The sulphates found at Stassfurt are as follows:

Anhydrite	$CaSO_4$.
Gypsum [a]	$CaSO_4.2H_2O$.
Glauberite	$CaSO_4.Na_2SO_4$.
Polyhalite	$2CaSO_4.MgSO_4.2H_2O$.
Krugite	$4CaSO_4.MgSO_4.K_2SO_4.2H_2O$.
Kieserite	$MgSO_4.H_2O$.
Epsomite	$MgSO_47H_2O$ (reichardtite).
Vanthoffite	$MgSO_4.3Na_2SO_4$.
Bloedite	$MgSO_4.Na_2SO_4.4H_2O$ (astrakanite).
Loewite	$MgSO_4.Na_2SO_4.2\frac{1}{2}H_2O$.
Langbeinite	$2MgSO_4.K_2SO_4$.
Leonite	$MgSO_4.K_2SO_4.4H_2O$.
Picromerite	$MgSO_4.K_2SO_4.6H_2O$ (schoenite).
Aphthitalite	$K_3Na(SO_4)_2$ (glaserite).[b]
Kainite	$MgSO_4.KCl.3H_2O$.

Celestite, $SrSO_4$, is also sometimes found in these deposits.

If we now study these compounds with reference to their origin, we shall find that the primary deposition followed approximately in the order of their hydration. Anhydrous calcium sulphate, anhydrite, forms the lowest member of the series, and gradually merges into the older salt. In the latter, glauberite and langbeinite, both anhydrous, first appear, although they also occur, perhaps as secondary minerals, higher up. According to H. Precht,[c] the langbeinite replaces polyhalite when the calcium sulphate needed to form the latter mineral is present in insufficient quantity. Polyhalite, in which the ratio of the sulphate molecules to water is as three to two, comes next, forming an important part of the upper layers in the older salt, and is followed by the monohydrated kieserite. Krugite, which is still lower in hydration, occurs with polyhalite in the younger salt, so that the two species may be regarded as equivalent and contemporaneous. The more highly hydrated species, bloedite, loewite, picromerite, and leonite, are principally found in the kainite region above the carnallite, and epsomite, with its seven molecules of water, is deposited in the salt clay. The anhydrous aphthitalite is a secondary mineral in the kainite, and vanthoffite, also anhydrous, is associated with aphthitalite and loewite in the same horizon. The

[a] Probably, as A. Geuther (Liebig's Annalen, vol. 218, p. 297, 1883) has shown, the formula here given to gypsum should be doubled. It then becomes $Ca_2S_2O_8.4H_2O$, and the hemihydrate, $Ca_2S_2O_8.H_2O$, a well-known artificial compound, furnishes evidence in favor of the higher formula.

[b] According to B. Gossner (Zeitschr. Kryst. Min., vol. 39, p. 155, 1904), glaserite is a definite species with the formula given above. J. H. Van't Hoff and H. Barschall (Zeitschr. physikal. Chemie, vol. 56, p. 212, 1906) question the definiteness of the mineral, and regard it as a mixture of the two component sulphates.

[c] Zeitschr. angew. Chemie, 1897, p. 68.

loewite is probably formed by dehydration of bloedite,[a] and the vanthoffite by a reaction between bloedite and sodium sulphate, the process being modified by the presence of other substances. The langbeinite of the kainite region is commonly regarded as a secondary product, but it may have been one of the parent species, for F. R. Mallet,[b] who has described this mineral as found in the Punjab salt range of India, observed that on exposure to moist air it gained 57 per cent in weight and altered into a mixture of epsomite and picromerite. On the other hand, langbeinite itself may be derived by various reactions from other Stassfurt species, such as leonite, kainite, kieserite, and picromerite, as Van't Hoff and Meyerhoffer have shown. The fact that a given salt may be produced by several different reactions warns us to be cautious in making assertions as to its origin at any specified point. Concentration and temperature are two of the determining factors in the deposition of salts, and the possible reactions are also profoundly modified by the presence of other compounds. Van't Hoff and his colleagues have determined experimentally many of the conditions under which the Stassfurt minerals occur or can be produced, and find that their temperatures of formation in a saturated solution of common salt are lower than in the absence of that compound. The elaborate researches of these authors, however, are not available for abstraction here, partly because they are complicated by diagrams, and partly because the investigations are still being continued. Only in a special monograph upon the Stassfurt beds could all the details of their investigations be adequately discussed.[c]

The chlorides found in the Stassfurt region are as follows:

Halite or rock salt, $NaCl$.

Sylvite, KCl. "Sylvinite" is a mixture of sylvite and rock salt, while the "Hartsalz" contains these substances together with kieserite.

Douglasite, $K_2MgCl_4.2H_2O$.

Carnallite, $KMgCl_3.6H_2O$.

Tachhydrite, $2MgCl_2.CaCl_2.12H_2O=3(RCl_2.4H_2O)$.

Bischofite, $MgCl_2.6H_2O$.

With the exception of the rock salt, which forms the great mass of the deposits overlying the anhydrite, these chlorides represent the concentration of the mother liquors in the carnallite zone. They were the most soluble compounds potentially existing in sea water, and, with the sulphato-chloride, kainite, were among the last substances

[a] See J. H. Van't Hoff, Sitzungsb. Akad. Berlin, 1902, p. 414. Also Van't Hoff and W. Meyerhoffer, idem, 1903, p. 678; 1904, p. 659.

[b] Mineralog. Mag., vol. 12, p. 159, 1899.

[c] Van't Hoff and his associates have already published about fifty papers on the Stassfurt salts, in Sitzungsb. Akad. Berlin, from 1897 to 1907. See also Van't Hoff, Physical Chemistry in the Service of the Sciences, Chicago, 1903; Zur Bildung der ozeanischen Salzablagerungen, Braunschweig, 1905; and an address in Ber. Internat. Kong. angew. Chemie, Berlin, 1903. Also summaries by E. F. Armstrong, Proc. British Assoc. Adv. Sci. 1901, p. 262, and E. Jänecke, Zeitschr. anorg. Chemie, 1906, p. 7.

The essential compounds are chlorides and sulphates, and as the latter are represented by the oldest of the important strata they may be considered first. The sulphates found at Stassfurt are as follows:

Anhydrite	$CaSO_4$.
Gypsum [a]	$CaSO_4.2H_2O$.
Glauberite	$CaSO_4.Na_2SO_4$.
Polyhalite	$2CaSO_4.MgSO_4.2H_2O$.
Krugite	$4CaSO_4.MgSO_4.K_2SO_4.2H_2O$.
Kieserite	$MgSO_4.H_2O$.
Epsomite	$MgSO_47H_2O$ (reichardtite).
Vanthoffite	$MgSO_4.3Na_2SO_4$.
Bloedite	$MgSO_4.Na_2SO_4.4H_2O$ (astrakanite).
Loewite	$MgSO_4.Na_2SO_4.2\frac{1}{2}H_2O$.
Langbeinite	$2MgSO_4.K_2SO_4$.
Leonite	$MgSO_4.K_2SO_4.4H_2O$.
Picromerite	$MgSO_4.K_2SO_4.6H_2O$ (schoenite).
Aphthitalite	$K_3Na(SO_4)_2$ (glaserite).[b]
Kainite	$MgSO_4.KCl.3H_2O$.

Celestite, $SrSO_4$, is also sometimes found in these deposits.

If we now study these compounds with reference to their origin, we shall find that the primary deposition followed approximately in the order of their hydration. Anhydrous calcium sulphate, anhydrite, forms the lowest member of the series, and gradually merges into the older salt. In the latter, glauberite and langbeinite, both anhydrous, first appear, although they also occur, perhaps as secondary minerals, higher up. According to H. Precht,[c] the langbeinite replaces polyhalite when the calcium sulphate needed to form the latter mineral is present in insufficient quantity. Polyhalite, in which the ratio of the sulphate molecules to water is as three to two, comes next, forming an important part of the upper layers in the older salt, and is followed by the monohydrated kieserite. Krugite, which is still lower in hydration, occurs with polyhalite in the younger salt, so that the two species may be regarded as equivalent and contemporaneous. The more highly hydrated species, bloedite, loewite, picromerite, and leonite, are principally found in the kainite region above the carnallite, and epsomite, with its seven molecules of water, is deposited in the salt clay. The anhydrous aphthitalite is a secondary mineral in the kainite, and vanthoffite, also anhydrous, is associated with aphthitalite and loewite in the same horizon. The

[a] Probably, as A. Geuther (Liebig's Annalen, vol. 218, p. 297, 1883) has shown, the formula here given to gypsum should be doubled. It then becomes $Ca_2S_2O_8.4H_2O$, and the hemihydrate, $Ca_2S_2O_8.H_2O$, a well-known artificial compound, furnishes evidence in favor of the higher formula.

[b] According to B. Gossner (Zeitschr. Kryst. Min., vol. 39, p. 155, 1904), glaserite is a definite species with the formula given above. J. H. Van't Hoff and H. Barschall (Zeitschr. physikal. Chemie, vol. 56, p. 212, 1906) question the definiteness of the mineral, and regard it as a mixture of the two component sulphates.

[c] Zeitschr. angew. Chemie, 1897, p. 68.

loewite is probably formed by dehydration of bloedite,[a] and the vanthoffite by a reaction between bloedite and sodium sulphate, the process being modified by the presence of other substances. The langbeinite of the kainite region is commonly regarded as a secondary product, but it may have been one of the parent species, for F. R. Mallet,[b] who has described this mineral as found in the Punjab salt range of India, observed that on exposure to moist air it gained 57 per cent in weight and altered into a mixture of epsomite and picromerite. On the other hand, langbeinite itself may be derived by various reactions from other Stassfurt species, such as leonite, kainite, kieserite, and picromerite, as Van't Hoff and Meyerhoffer have shown. The fact that a given salt may be produced by several different reactions warns us to be cautious in making assertions as to its origin at any specified point. Concentration and temperature are two of the determining factors in the deposition of salts, and the possible reactions are also profoundly modified by the presence of other compounds. Van't Hoff and his colleagues have determined experimentally many of the conditions under which the Stassfurt minerals occur or can be produced, and find that their temperatures of formation in a saturated solution of common salt are lower than in the absence of that compound. The elaborate researches of these authors, however, are not available for abstraction here, partly because they are complicated by diagrams, and partly because the investigations are still being continued. Only in a special monograph upon the Stassfurt beds could all the details of their investigations be adequately discussed.[c]

The chlorides found in the Stassfurt region are as follows:

Halite or rock salt, $NaCl$.

Sylvite, KCl. "Sylvinite" is a mixture of sylvite and rock salt, while the "Hartsalz" contains these substances together with kieserite.

Douglasite, $K_2MgCl_4.2H_2O$.

Carnallite, $KMgCl_3.6H_2O$.

Tachhydrite, $2MgCl_2.CaCl_2.12H_2O=3(RCl_2.4H_2O)$.

Bischofite, $MgCl_2.6H_2O$.

With the exception of the rock salt, which forms the great mass of the deposits overlying the anhydrite, these chlorides represent the concentration of the mother liquors in the carnallite zone. They were the most soluble compounds potentially existing in sea water, and, with the sulphato-chloride, kainite, were among the last substances

[a] See J. H. Van't Hoff, Sitzungsb. Akad. Berlin, 1902, p. 414. Also Van't Hoff and W. Meyerhoffer, idem, 1903, p. 678; 1904, p. 659.

[b] Mineralog. Mag., vol. 12, p. 159, 1899.

[c] Van't Hoff and his associates have already published about fifty papers on the Stassfurt salts, in Sitzungsb. Akad. Berlin, from 1897 to 1907. See also Van't Hoff, Physical Chemistry in the Service of the Sciences, Chicago, 1903; Zur Bildung der ozeanischen Salzablagerungen, Braunschweig, 1905; and an address in Ber. Internat. Kong. angew. Chemie, Berlin, 1903. Also summaries by E. F. Armstrong, Proc. British Assoc. Adv. Sci. 1901, p. 262, and E. Jänecke, Zeitschr. anorg. Chemie, 1906, p. 7.

to crystallize. Halite and douglasite were distinctly primary deposits; carnallite was generally, and sylvite occasionally, primary; tachhydrite and bischofite were secondary products. Kainite was sometimes one and sometimes the other. The "Hartsalz," according to Van't Hoff and Meyerhoffer,[a] is a secondary product formed by the action of solutions upon a mixture of carnallite, kieserite, and sodium chloride, which was preceded by the splitting up of kainite into sylvite and kieserite. The kainite, in its most conspicuous development, lies between the carnallite and the "Hartsalz." From the carnallite itself, sylvite and bischofite may be derived, or it may be formed by the direct union of these species, which are its two components. According to C. Przibylla,[b] when sylvite and bischofite combine to form carnallite, there is an increase of 4.95 per cent in volume. Possibly, therefore, the formation of carnallite at low levels is prevented by pressure. With the carnallite and its overlying potassium salts, the borates generally occur. They are boracite, sulphoborite, pinnoite, ascharite, and heintzite; one other, hydroboracite, is found earlier in the series, near the lower limit of the polyhalite zone. These species are relatively rare, except the boracite, and it is not necessary to consider them any further at this point, for their occurrence tells us little about the main phenomena of saline concentration.

We must not suppose, for an instant, that these zones of deposition are regularly and completely separated, nor even that they represent in any close degree the products observed in the artificial evaporation of sea water or brine. In the latter case a moderate quantity of water is concentrated by itself; at Stassfurt more water was continually added from the ocean. On the one hand calcium sulphate is deposited almost wholly at one time; on the other new quantities were precipitated so long as the evaporating bay retained its connection with the sea. In the salt pan gypsum forms a bottom layer before salt begins to separate out; at Stassfurt anhydrite is found in greater or less amount through all the zones, and so also is the sodium chloride. When a shallow lake or isolated lagoon evaporates, the artificial process is closely paralleled, but a concentration with continuous replenishment lasting for thousands of years is a very different thing. The principles are unchanged, the broad outlines remain the same, but the details of the process are greatly modified.

We are now in a position to trace more distinctly the phenomena which attend the formation of the beds at Stassfurt.[c] For a long time only gypsum was deposited; but later, as the concentration of

[a] Sitzungsb. Akad. Berlin, 1902, p. 1106. See also J. H. Van't Hoff, F. B. Kenrick, and H. M. Dawson, Zeitschr. physikal. Chemie, vol. 39, p. 27, 1902, on the conditions of formation of tachhydrite.

[b] *Centralbl.* Min. Geol. Pal., 1904, p. 254.

[c] *Cf. G. Lunge,* Thorpe's Dict. Applied Chem., vol. 3, p. 268, 1893.

the bay increased, salt also was laid down, and by its action the gypsum was converted into anhydrite.[a] From this point onward, for a considerable period, the calcium sulphate derived from the influx of sea water above fell through a deep layer of concentrated brine and was deposited directly as anhydrite, in alternating layers with the salt.[b] When, however, so much salt had been precipitated that the supernatant solutions had become bitterns rich in magnesium salts, the calcium sulphate united with these salts, and polyhalite was formed. The polyhalite region at Stassfurt is essentially a bed of rock salt, containing, with other impurities, from 6 to 7 per cent of the new mineral. Possibly syngenite, $CaK_2(SO_4)_2.H_2O$, a species which occurs in a similar deposit at Kalusz in Galicia, but which does not seem to be recorded from Stassfurt, was first produced. Syngenite may be prepared artificially by the direct action of potassium sulphate upon gypsum, and it is converted by strong solutions of magnesium chloride and sulphate into polyhalite.[c] The occurrence of syngenite at Kalusz is below the potassium salts, in rock salt containing anhydrite. It is therefore the equivalent of polyhalite in position.[d]

As the concentration of the magnesian mother liquors increased, kieserite was produced, the dehydrating action of magnesium chloride preventing the formation of epsomite. H. Precht and B. Wittjen[e] have shown that when magnesium chloride and sulphate are dissolved together and the solution then evaporated upon the water bath, kieserite separates out. Thus the kieserite zone was formed, which contains, on an average, 65 per cent of rock salt, 17 of kieserite, 13 of carnallite, 3 of bischofite, and 2 of anhydrite. At this point polyhalite disappears. The last step in the concentration was the formation of carnallite, with its associated minerals, especially sylvite and kainite, from the chlorides which had hitherto remained in solution. The average composition of this zone is 55 per cent of carnallite, 25 of rock salt, 16 of kieserite, and 4 of various other minerals. The kainite layers above the carnallite were probably formed by the action of percolating waters upon the latter, in presence of some kieserite. Finally, a protecting layer of mud or clay was laid down over the mass of salts, preventing in great measure, but perhaps not entirely,

[a] According to J. H. Van't Hoff and F. Weigert, Sitzungsb. Akad. Berlin, 1901, p. 1140, anhydrite forms from gypsum in sodium chloride solutions at 30°. In sea water the transformation takes place at 25°.

[b] Cf. J. H. Van't Hoff and P. Farup, Sitzungsb. Akad. Berlin, 1903, p. 1000. H. Vater (idem, 1900, p. 270) discusses marine anhydrite, and gives many references to literature. At ordinary temperatures, according to Vater, calcium sulphate crystallizes from a saturated solution of salt in the form of gypsum.

[c] E. E. Basch, Sitzungsb. Akad. Berlin, 1900, p. 1084.

[d] A. Aigner (Oesterr. Zeitschr. Berg. Hütt., 1901, p. 686) has described the Austrian polyhalite. For analysis of kainite, carnallite, etc., from Kalusz and Aussee, see C. von John, Jahrb. K.-k. geol. Reichsanstalt, vol. 42, p. 341, 1892. On mirabilite from Kalusz, see R. Zaloziecki, Monatsh. Chemie, vol. 13, p. 504, 1892.

[e] Ber. Deutsch. chem. Gesell., vol. 14, p. 2131, 1881.

their subsequent re-solution. Into all of the foregoing reactions one element entered which counts for little in their imitation on a small scale—namely, the element of time. The prolonged action of the mother liquors, during thousands of years, upon the earlier deposits, must have been much more thorough than their effect during an experiment in the laboratory. In the latter case the solid deposits are usually removed from time to time, so that the procedure does not accurately repeat the operations of nature. These considerations should especially be taken into account in studying the transformation of gypsum into anhydrite, or the reverse reaction which has often been observed.[a] Beds of anhydrite may take up water and be reconverted into gypsum through considerable depths, as at Bex in Switzerland, where the alteration has reached a thickness of from 60 to 100 feet. Time is an important factor in all such transformations, especially when one of the reacting bodies happens to be a solid of relatively low solubility.

The temperature conditions which governed the deposition of the Stassfurt salts are briefly summed up by Van't Hoff [b] as follows:

1. Glauberite, formed above 10°.
2. Langbeinite, formed above 37°.
3. Loewite, formed above 43°.
4. Vanthoffite, formed above 46°.
5. Loewite with glaserite, formed above 57°.
6. Loewite with vanthoffite, formed above 60°.
7. Kieserite with sylvite, formed above 72°.

This scale of temperatures is designated as a "geological thermometer," and gives us something like a definite idea of past conditions in the Stassfurt beds.

OTHER SALT BEDS.

The Stassfurt deposits, as has already been indicated, are altogether exceptional in their completeness. Rock salt is generally found in much thinner deposits, and as a rule it is unaccompanied by potassium or magnesium salts in any notable quantities. Gypsum or anhydrite, however, is commonly present, either under the salt or in its near neighborhood. Where gypsum is absent we may infer, with a fair degree of probability, that the salt is of secondary origin and not derived directly from sea water, or that it came from the evaporation of a salt lake which contained either no calcium or no sulphates. Gypsum, of course, can not form unless its constituents are at hand. Furthermore, gypsum may be produced otherwise than from the concentration of sea water, and it may exist as a

[a] Cf. F. Hammerschmidt, Min. pet. Mitth., vol. 5, p. 272, 1882–83; and J. F. McCaleb, Am. Chem. Jour., vol. 11, p. 34, 1889.

[b] Zeitschr. Elektrochemie, vol. 11, p. 709, 1905.

remainder where the more soluble salts have been washed away. It can occur independently of or concomitant with the presence of rock salt, and each locality must be considered on its individual merits. On some small coral islands in the Pacific gypsum is found as a residue from the evaporation of lagoons, in beds which may reach 2 feet in thickness.[a] Here the origin from sea water is evident. On the other hand, waters containing little or no salt often deposit gypsum. I. C. Russell,[b] for instance, has described such a deposit at Fillmore, Utah, which covers an area of 12 square miles and has been opened to a depth of 6 feet without reaching bottom. Gypsum is also common as an efflorescence or incrustation in caves,[c] and it can be produced by the alteration of other rocks. The oxidation of pyrites in limestone may form gypsum; or, as was shown in the preceding chapter, it can originate from double decomposition between other metallic sulphates and calcium carbonate. L. W. Jowa,[d] for example, prepared selenite in measurable crystals by the action of a solution of ferrous sulphate on chalk.

In the Salina formation of New York gypsum occurs above the salt, and its presence is attributed by Dana[e] to the alteration of the overlying "Waterlime" beds. In this region the salt occurs in layers interstratified with shales, a series of shallow-water deposits having been successively covered by bodies of mud or clay.[f] At Goderich, Canada, a similar but not identical alternation has been observed.[g] Here a boring 1,517 feet deep revealed dolomite and anhydrite, and above that were six beds of salt alternating with similar materials. The uppermost salt was struck at 1,028 feet, and at 876 feet dolomite, with seams of gypsum, was found. The anhydrite at bottom was probably normal; but what the upper gypsum signifies is not clearly shown. It may be the beginning of an unfinished concentration, or else quite independent of the salt below. Throughout the region of salt more or less anhydrite was found, but potassium compounds were either absent or present only in traces. Neither in New York nor in the Goderich deposits were the mother liquors permitted to crystallize.[h]

ANALYSES OF SALT.

Neither salt nor gypsum is found in nature in a state of absolute purity, although that condition is sometimes very nearly approxi-

[a] J. D. Dana, Manual of Geology, 4th ed., p. 120.

[b] Mon. U. S. Geol. Survey, vol. 11, p. 84, 1885. The deposition of gypsum by Lake Chichen-Kanab, Yucatan, was mentioned in Chapter V (p. 126).

[c] See G. P. Merrill, Proc. U. S. Nat. Mus., vol. 17, p. 77, 1905.

[d] Ann. Soc. géol. Belg., vol. 23, p. cxxviii, 1895–96.

[e] Manual of Geology, 4th ed., p. 554.

[f] See sections given in Bull. No. 11, New York State Mus., 1893.

[g] T. S. Hunt, Geol. Survey Canada, Rept. Progress, 1876–77, p. 221.

[h] The solubility of calcium sulphate, gypsum, anhydrite, etc., in water and various solutions has been elaborately studied. See an excellent summary by F. K. Cameron and J. M. Bell, *in Bull. No. 33, Bureau of Soils*, U. S. Dept. Agric., 1906.

mated. Being deposited from solutions containing other substances, some of the latter are always carried down and reveal their presence on analysis. Analyses of rock salt are exceedingly numerous, and only a moderate number, enough to show the range of variation in the mineral, need be cited here.[a]

Analyses of rock salt.

A. Salt from Goderich, Canada. Analysis by Gould, for T. Sterry Hunt, Geol. Survey Canada, Rept. Progress, 1876–77, p. 233.

B. Salt from Kingman, Kansas. Analysis by E. H. S. Bailey and E. C. Case, Univ. Geol. Survey Kansas, vol. 7, p. 73, 1902. Ten other analyses of rock salt are given, mostly purer than this.

C. Saline incrustation, Tuthill Marsh, Kansas. Idem, p. 70. Analysis made in the University of Kansas laboratory, but analyst not named.

D. Salt from Petit Anse, Louisiana. Analysis by F. W. Taylor, Mineral Resources U. S., 1883, p. 564, U. S. Geol. Survey.

E. Salt from Leoncito, La Rioja Province, Argentina. Analysis by L. Harperath, Bol. Acad. nac. cien. Córdoba, Argentina, vol. 10, p. 427, 1890. Remarkable for its high proportion of potassium salts. Harperath gives nineteen analyses of Argentine salt, some of them representing great purity, but several approaching this one.

F. Salt stalactite from a disused working at Redhaugh colliery, Gateshead, England. Analysis by W. H. Dunn, published by P. P. Bedson, Jour. Soc. Chem. Ind., vol. 8, p. 98, 1889.

G. Salt from bed deposited by the Katwee Lake, north of the Albert Edward Nyanza, central Africa. Analysis by H. S. Wellcome; abstract in Jour. Soc. Chem. Ind., vol. 9, p. 734, 1890. An analysis of the lake water by A. Pappe and H. D. Richmond is also given in this journal. See *ante*, p. 133.

	A.	B.	C.	D.	E.	F.[a]	G.
$NaCl$	99.687	97.51	71.82	98.731	81.491	99.00	82.71
KCl	.....	.....	.....	.....	17.483	.....	.....
$CaCl_2$	.032	.....	.....	trace	.....	.52	.....
$MgCl_2$	.095	.10	.....	.013	.....	.15	.....
Na_2SO_4	.....	.57	21.98	.....	.....	.....	5.32
K_2SO_4	.....	.....	.....	.....	.048	.....	8.43
$CaSO_4$	.090	1.51	.99	1.192	.978	.....	.....
$MgSO_4$	.....	.....	1.29	.....	.....	.....	.....
Na_2CO_3	.....	.....	3.56	.....	.....	.....	2.46
Al_2O_3	.....	.....	.13	.....	.....	.....	.....
Fe_2O_3	.....	.11		.010	.....	.....	.15
SiO_2	.....	.....	.....	.024	.....	.....	.....
Insoluble	.017	.20	.23	.....	.....	.....	.....
H_2O	.079	.....	.....	.030	.....	.28	.82
	100.000	100.00	100.000	100.000	100.000	99.95	99.89

[a] This analysis, in the original, is stated in the form of radicles. It is recalculated here to salts for uniformity with the others.

In addition to the impurities shown in the analyses, rock salt frequently contains gaseous inclusions. These have been often examined, most recently by N. Costachescu,[b] who finds some of them to consist mainly of nitrogen, and others mainly of methane. Other hydrocarbons and carbon dioxide are also found. Rock salt is not uncom-

[a] See Thorpe's Dict. Appl. Chem., vol. 4, p. 430, for additional data. Also Geol. Survey Michigan, vol. 3, appendix B, and vol. 5, pt. 2, for Michigan salt and brines; Bull. No. 11, New York State Mus., for New York examples; Prel. Rept. Geol. Louisiana, 1899, for material from that State; and C. I. Istrati, Bull. Soc. chim., 3d ser., vol. 2, p. 4, 1889, for analyses of Roumanian salt. Some Roumanian samples contain as high as 99.9 per cent of sodium chloride.

[b] *Ann. Univ.* Jassy, vol. 4, p. 3, 1906. The author gives a good summary of earlier investigations.

monly colored, especially blue. This coloration has been attributed to organic matter, and recently, by H. Siedentopf,[a] to the presence of minute particles of metallic sodium. This very remarkable conclusion would seem to require confirmation.

ANALYSES OF GYPSUM.

For gypsum the following analyses, all made in the laboratory of the United States Geological Survey, are sufficient to show its usual character.

Analyses of gypsum.

A. From Hillsboro, New Brunswick. Analysis by George Steiger.
B. From Alabaster, Michigan. Analysis by Steiger.
C. From east of Cascade, Black Hills, South Dakota. Analysis by Steiger.
D, E. From Nephi, Utah. Analyses by E. T. Allen. This material evidently contains admixed anhydrite.[a]

	A.	B.	C.	D.	E.
SO_3	46.18	46.18	45.45	48.14	39.53
CO_2	.....	.....	.85	.65	7.73
Cl	trace	.03	.....	trace	.04
SiO_2	.....	.....	.10	.....	.....
Al_2O_3	} .10	} .08	.12	.....	} .14
Fe_2O_3			.....	.....	
CaO	32.37	32.33	32.44	35.29	38.46
MgO	trace	.05	.33	trace	.24
Na_2O	} .10	} .14	.....	.....	.07
K_2O			.....	.....	.19
H_2O	20.94	20.96	20.80	15.88	12.69
Insoluble	.10	.05	.....	.....	.45
	99.79	99.82	100.09	99.96	99.54

[a] For other data relative to the composition and origin of gypsum, see G. P. Grimsley and E. H. S. Bailey, Univ. Geol. Survey Kansas, vol. 5, 1899. Also E. C. Eckel, Bull. U. S. Geol. Survey No. 213, p. 407, 1903; G. P. Grimsley, Geol. Survey Michigan, vol. 9, pt. 2, 1903–4, and Am. Geologist, vol. 34, p. 378, 1904; F. A. Wilder, Jour. Geol., vol. 11, p. 723, 1903; A. L. Parsons, Twenty-third Rept. State Geologist, New York State Mus., 1903; and G. I. Adams and others, on gypsum deposits of the United States, Bull. U. S. Geol. Survey No. 223, 1904.

BITTERNS.

In what has been said so far, we have considered almost exclusively the concentration of sea water; but other waters form other deposits and yield different bitterns. Analyses of bittern are not often reported, and only a few examples can be given here.[b] These analyses are recalculated to ionic form, and give the percentage composition of the anhydrous saline matter.

Analyses of bitterns.

A. Bittern from "bay salt," Alameda Bay, California. Analysis by F. Gutzkow, cited in W. L. Rowland's report on salt, vol. 2, Tenth U. S. Census, 1883. From sea water.
B. Bittern of maximum concentration, from the brines of Syracuse, New York. Analysis by C. A. Goessmann, Am. Jour. Sci., 2d ser., vol. 44, p. 80, 1867.

[a] Physikal. Zeitschr., vol. 6, p. 855, 1905. See also L. Wöhler and H. Kasarnowski, Zeitschr. anorg. Chemie, vol. 47, p. 853, 1905, and F. Cornu, Centralbl. Min. Geol. Pal., 1907, p. 166.

[b] In addition to Usiglio's analyses cited on p. 174, *ante*.

C. Bittern from the brine of Bay City, Michigan. Analysis by E. S. Fitch, cited by W. F. Cooper, Rept. State Board Geol. Survey Michigan, 1905, p. 389.

D. Bittern from the saline of Medellin, Antioquia, Colombia. Analysis by J. B. Boussingault, Ann. chim. phys., 5th ser., vol. 2, p. 102, 1874. Known locally as "oil of salt."

E. Bittern from salt works of Allendorf-an-Werra, Germany. Analysis by E. Reichardt, abstract in Jour. Chem. Soc., vol. 42, p. 24, 1882.

	A.	B.	C.	D.	E.
Cl	52.63	63.93	57.56	44.99	55.56
Br	.27	1.16	19.23	1.02	.22
I	.....	trace	.....	.03	.....
SO_4	15.14	.06	.54	14.07	15.08
Na	18.89	10.24	4.31	25.97	10.62
K	1.88	5.27	.....	11.18	6.40
Li	.....	.....	.....	trace	.01
NH_4	.....	.....	.....	.09	.....
Ca	.....	11.26	9.37	.28	.07
Mg	11.19	8.08	5.17	2.37	8.81
Al	.....	.....	3.82	.....	.....
SiO_2	.....	.....	.....	.....	.02
Organic	.....	.....	.....	.....	3.21
	100.00	100.00	100.00	100.00	100.00
Salinity, per cent	34.555	33.567	9.045	33.478	29.149

The excess of calcium over the amount deposited as gypsum is very striking in the Syracuse example. In A, D, and E calcium has been almost entirely deposited, and a large excess of the sulphuric ion appears. The concentration of potassium is also well shown in two of the bitterns.

The bittern from Michigan is remarkable for its very high proportion of bromine, and the analysis may not be correct. Still, the Michigan brines are important commercial sources of bromine, and so, too, are those of the Kanawha Valley, in West Virginia. For the latter I have found no satisfactory analyses.[a] A. L. Baker[b] reports that 20 to 30 gallons of Kanawha bittern will yield 1 pound of bromine, and he has also shown that they contain iodine in very appreciable amounts, from 38.4 to 59.2 milligrams per liter. The richness of the Dead Sea in bromine has already been pointed out. Bitterns of this class deserve a more careful study than they seem to have yet received.

SODIUM SULPHATE.

In the evaporation of ocean water the sulphates which form are first the calcium compound and then the magnesium salt, or else double sulphates of magnesium, with either calcium or sodium. Anhydrite, then polyhalite, and then kieserite, follow one another in regular succession. In many saline lakes, however, calcium and magnesium are deficient in quantity, while sodium sulphate is present in relatively large amounts. In such lakes sodium sulphate is deposited in considerable quantities, generally preceding the deposition of salt.

[a] The Tenth Census report, previously cited, gives two analyses of bittern from Midland, Michigan, and an incomplete analysis of one from the Kanawha region; but they are not sufficiently conclusive to warrant reproduction.

[b] *Chem. News, vol. 44, p. 207, 1881.*

and its precipitation is determined or affected by the season of the year. Sodium sulphate is much more soluble in warm than in cold water, but the similar variation for salt is comparatively small; so that the mere change of temperature between summer and winter may cause mirabilite to separate out, or to redissolve again. An instance of this kind, in the Karaboghaz, has already been noticed, and the Great Salt Lake[a] not only deposits sodium sulphate during winter, but even casts it up in heaps upon the shore. The salt thus formed is the decahydrate, mirabilite, $Na_2SO_4.10H_2O$; while from warm solutions, especially from concentrated brines, the anhydrous sulphate thenardite may be deposited. In warm and dry air mirabilite effloresces, loses its water, and is transformed into thenardite, which is a well-known and common mineral. On the surface of Lacu Sarat, in Roumania,[b] large crystals of mirabilite form during winter, to redissolve, at least in part, when the weather becomes warm, and many other sulphate or sulphato-chloride lakes exhibit similar phenomena. The Siberian lakes, studied by F. Ludwig,[c] deposit mainly sulphates; sodium sulphate in Lakes Altai, Beisk, Domoshakovo, and Kisil-Kul, while in the Schunett Lake a quantity of magnesium sulphate is also formed. Ludwig gives analyses of these precipitates, but the three in the subjoined table are enough to cite here.

Analyses of saline deposits in two Siberian lakes.[a]

A. Deposit on bottom of Lake Altai.
B. Deposit on shore of Lake Altai.
C. Deposit on shore of Schunett Lake.

	A.	B.	C.
CO_2	0.12	0.03	0.63
SO_3	54.00	55.67	54.45
Na_2O	41.64	43.21	25.96
K_2O	.....	.....	1.93
NaCl	.29	.13	.92
CaO	.22	.01	.07
MgO	.11	.....	10.22
Al_2O_3	.....	.01	.07
Fe_2O_3	.11		.01
SiO_2	.....	.....	.07
Insoluble residue	3.46	.91	5.70
	99.95	99.97	100.03

[a] The analyses are carried by Ludwig to four decimal places, but I have rounded them off to two. He also gives the Na and Cl of the sodium chloride separately, and the insoluble residue he divides into organic and inorganic. The consolidation of the data as tabulated above is for the sake of simplicity. Their subdivision does not help to illustrate the phenomena now under discussion.

These lakes, Altai and Schunett, are sulphato-chloride waters, but the first effect of their concentration is to bring about a partial separation of their salts. The same effect is perhaps even better exem-

[a] G. K. Gilbert, Mon. U. S. Geol. Survey, vol. 1, p. 253, 1890.

[b] L. Mrazec and W. Teisseyre, Aperçu géologique sur les formations salifères et les gisements de sel en Roumanie, 1902. This memoir contains a bibliography relative to Roumanian salt.

[c] Zeitschr. prakt. Geol., vol. 11, p. 401, 1903. Cf. *ante*, p. 131.

plified by Sevier Lake, in Utah, which is at times entirely dry, forming a thin saline layer that in moister seasons partly redissolves.[a] The deposits from this lake have been analyzed, those from the margin by O. D. Allen, those from the center by S. A. Lattimore, and their average composition, as cited by Gilbert, is given below:

Average composition of deposits from Sevier Lake, Utah.

	Margin.	Center.
Na_2SO_4	14.3	84.6
Na_2CO_3	.....	.4
NaCl	75.8	7.0
$CaSO_4$	.....	trace
$MgSO_4$	5.5	trace
K_2SO_4	.7	.....
H_2O	3.6	8.0
Insoluble	.1	trace
	100.0	100.0

Here the sodium sulphate tends to accumulate at the center of the lake, whereas the later deposits, which are covered by a crust of sodium chloride, are formed in larger relative proportion around the margin.

Fractional crystallization, however, is only a part of the process by which the saline constituents of a water may be separated. Salt and alkaline lakes are peculiarly characteristic of desert regions, and the smaller depressions may be alternately dry and filled with water. Suppose, now, following a suggestion of J. Walther,[b] that such a lake, concentrated to a bed of salt covered by a thin sheet of bittern, is overwhelmed by desert sands, so that a permanent saline deposit, protected from further change, is formed. The bittern will be absorbed by the sandy covering, its salts will rise by capillary attraction to the surface, and the efflorescence thus produced will be scattered in dust by the winds. On the steppes of the lower Volga, according to Walther, there are numerous remainders of salt lakes, which have been thus covered, and where, beneath the sand, solid salt of great purity is found. The mother liquors have vanished, and their saline constituents have been scattered far and wide.

MISCELLANEOUS DESERT SALTS.

Wherever deserts exist, there these saline residues are common. They are peculiarly abundant in the western part of the United States, especially in the Bonneville and Lahontan basins and over the so-called alkali plains, and they exhibit a great variety of composition. Chlorides, sulphates, carbonates, and borates occur, separately or altogether, and many analyses of these products have been

[a] G. K. Gilbert, Mon. U. S. Geol. Survey, vol. 1, pp. 224–227, 1890. See p. 120, *ante*, for the composition of the brine.

[b] *Das Gesetz der* Wüstenbildung, p. 149, Berlin, 1900. Chapter 13 is devoted to the *subject of desert salts.*

recorded. To the sulphato-chloride class the subjoined analyses belong, the other saline deposits being left for separate consideration later.[a]

Analyses of saline deposits from sulphato-chloride waters.

A. Salt, Osobb Valley, Nevada. Analysis by R. W. Woodward, Rept. U. S. Geol. Explor. 40th Par., vol. 2, p. 707, 1877.

B. Saline efflorescence on desert, south of Hot Springs station, Nevada. Analysis by O. D. Allen, idem, p. 773.

C. Incrustation from Quinns River crossing, Black Rock Desert, Nevada. Analysis by O. D. Allen, idem, p. 791.

D. Salt from Salt Lake, 7 miles east of the Zandia Mountains, New Mexico. Analysis by O. Loew, Rept. U. S. Geol. Surv. W. 100th Mer., vol. 3, p. 627, 1875.

E. Efflorescence from alkali flat, near Buffalo Spring, Nevada. Analysis by O. D. Allen, op. cit., p. 731.

F. Efflorescence from Santa Catalina, Arizona. Analysis by O. Loew, op. cit., p. 628.

G. Salt from shore of lake near Percy, Nevada. Analysis by R. W. Woodward, Rept. U. S. Geol. Explor. 40th Par., vol. 2, p. 148, 1877.

H. Efflorescence on loess, near Cordoba, Argentina. Analysis by Doering, cited by A. W. Stelzner, Beiträge zur Geol. u. Palaeont. der Argentinischen Repub., 1885. A number of salts, etc., are described on pages 295–309. This one is remarkably rich in potassium.

	A.	B.	C.	D.	E.	F.	G.	H.
$NaCl$	95.49	95.67	85.27	82.57	70.81	5.93	0.74	10.81
Na_2SO_4	1.91	.....	1.75	6.89	26.38	94.04	46.27	58.14
Na_2CO_3	.96	.....	2.59	.....	.....	.....	.....	.....
K_2SO_4	.....	.....	.....	.....	1.94	.....	.....	32.34
$MgCl_2$	.....	.....	.....	5.88	.....	.....	.....	.....
$MgSO_4$	.....	.....	.....	.....	.....	.....	48.28	.....
$CaSO_4$	.....	1.63	.....	trace	.....	.....	4.45	3.71
H_2O	.52	.73	8.57	4.66	.....	.....	.....	.....
nsoluble residue	.12	1.97	1.82	.....	.....	.....	.....	.....
	100.00	100.00	100.00	100.00	99.13	99.97	99.74	100.00

These analyses, taken in connection with those of salt given on page 184, show the same order of variation as is found in the parent waters themselves. Chlorides form one end of the series, sulphates the other; and every gradation may exist between the two. Even different parts of the same deposit may show evidence of such a gradation, as in Sevier Lake, where separation of the salts has gone on to a greater or less extent; but partial re-solution in time of high water can reverse the process and bring about a new distribution of the soluble substances.

ALKALINE CARBONATES.

From alkaline lakes alkaline carbonates are deposited, mingled with chlorides and sulphates in varying proportions. In Hungary, Egypt, Armenia, and Venezuela such deposits are found, and they are peculiarly common in the Lahontan basin of Nevada, and in southern California. In Nevada they often form "playas," or "playa lakes"[b]—beds which are dry in summer and flooded to the depth of a few inches during the wet season. A number of these alkaline

[a] A number of analyses of similar products from Argentina are given by F. Schickendantz, Revista del Museo de la Plata, vol. 7, p. 1, 1895.

[b] See I. C. Russell, *Mon. U. S. Geol. Survey*, vol. 11, p. 81, 1885.

incrustations were analyzed by the chemists of the Fortieth Parallel Survey, with the results shown in analyses A to F of the subjoined table.[a] With these may be included two analyses of the soluble parts of incrustations, made by T. M. Chatard in the laboratory of the United States Geological Survey.

Analyses of incrustations deposited in alkaline lakes.

A. From western arm of Black Rock Desert, near the so-called "Hardin City," Nevada. Analysis by O. D. Allen, vol. 2, p. 792, 1877.
B. From Ruby Valley, Nevada. Analysis by R. W. Woodward, vol. 1, p. 503, 1878.
C. From valley of Deep Creek, Utah. Analysis by Woodward, vol. 2, p. 474.
D. From Antelope Valley, Nevada. Analysis by Woodward, vol. 2, p. 541.
E. From a point near Peko station, on the Humboldt River, Nevada. Analysis by Woodward, vol. 2, p. 594.
F. From Brown's station, Humboldt Lake, Nevada. Analysis by Woodward, vol. 2, p. 744.
G. From surface of playa, north arm of Old Walker Lake, Nevada. Soluble portion, 29.78 per cent.
H. Five miles west of Black Rock, Nevada. Soluble portion, 23.10 per cent.

	A.	B.	C.	D.	E.	F.	G.	H.
Na_2CO_3	52.10	58.69	25.12	25.95	48.99	7.02	72.69	9.06
$NaHCO_3$	.....	8.09	14.76	14.35	36.01	11.13	.....	.....
Na_2SO_4	27.55	28.32	17.43	33.31	4.42	49.67	17.49	27.05
NaCl	18.47	2.11	38.01	24.51	7.24	20.88	2.53	59.32
$Na_2B_4O_7$	.....	.....	.....	.....	3.34	11.30	4.15	1.00
K_2SO_4	.....	2.79	4.68	1.88	.....	.....	.....	.....
KCl	.....	.....	.....	.....	.....	.....	1.18	1.39
SiO_2	.....	.....	.....	.....	.....	.....	1.96	2.18
	98.12	100.00	100.00	100.00	100.00	100.00	100.00	100.00

The following table contains analyses, reported by E. W. Hilgard,[b] of the soluble part of "alkali" incrustations from California. They exhibit remarkable peculiarities of composition, especially in their contents of potassium salts, nitrates, and phosphates.

Analyses of soluble part of "alkali" incrustations from California.

A. From Visalia, Tulare County.
B. From Westminster, Orange County.
C. From the experiment station, Tulare County.
D. From the Merced bottoms, Merced County.

	A.	B.	C.	D.
Na_2CO_3	65.72	62.22	32.58	75.95
Na_2SO_4	.....	.....	25.28	4.67
NaCl	3.98	10.57	14.75	1.46
$NaNO_3$	.....	.....	19.78	12.98
NaH_2PO_4	8.42	.....	2.25	4.94
K_2CO_4	.....	6.59	.....	.....
K_2SO_4	20.23	20.62	3.95	.....
$MgSO_4$	1.65	.....	.....	.....
$(NH_4)_2CO_3$	.....	.....	1.41	.....
	100.00	100.00	100.00	100.00

[a] The analyses are here cited as recalculated by T. M. Chatard, Bull. U. S. Geol. Survey No. 60, pp. 55, 56, 1890. The original statements do not adequately discriminate between carbonates and bicarbonates.

[b] Appendix, Rept. Univ. California Exper. Sta., 1890. Other analyses are given in this report.

Similar deposits are formed by the two soda lakes at Ragtown, Nevada, and these have been worked for commercial purposes. Two samples were collected by Arnold Hague in 1868, before working began; a third, representing the marketable product, was examined by T. M. Chatard.[a] The analyses are as follows, in the form adopted by Chatard:

Analyses of deposits from Soda Lakes, Ragtown, Nevada.

A. Big Soda Lake. Analysis by O. D. Allen, Rept. U. S. Geol. Explor. 40th Par., vol. 2, p. 748, 1877.
B. Little Soda Lake. Analysis by Allen, op. cit., p. 759.
C. Little Soda Lake, market soda. Analysis by Chatard.

	A.	B.	C.
Na_2CO_3	45.05	44.25	52.20
$NaHCO_3$	34.66	34.90	25.05
Na_2SO_4	1.29	.99	5.10
NaCl	1.61	1.10	3.31
SiO_2	.....	.....	.27
Insoluble	.80	2.81	.....
H_2O	16.19	15.95	14.16
	99.60	100.00	100.09

These soda lakes also deposit crystals of gaylussite, of the formula $CaCO_3.Na_2CO_3.5H_2O$,[b] although the analysis of the water[c] reveals no calcium. Probably the minute quantities of calcium that enter the waters from springs or otherwise are immediately removed in this form.

It will be observed, on examining the foregoing analyses, that they represent variable mixtures of several salts. The latter, of course, have been calculated from the analytical data, and the radicles might have been combined somewhat differently, but without any essential change in the general results. Several of the analyses are reckoned upon the basis of anhydrous material, and are so far incorrect, but they show with a fair degree of accuracy the relative proportions of the several compounds which were present. The carbonates were probably three in number—thermonatrite, $Na_2CO_3.H_2O$; natron, $Na_2CO_3.10H_2O$; and trona, or urao, $Na_2CO_3.NaHCO_3.2H_2O$. Sometimes one and sometimes another of these salts is in excess, but the third is the most important, as the elaborate researches of T. M. Chatard[d] have shown. That this is the first salt to be deposited from waters of this class his experiments upon Owens Lake water clearly prove.

[a] Bull. U. S. Geol. Survey No. 60, p. 52, 1890. Chatard cites a number of analyses of foreign urao or trona. For analyses of Egyptian urao see O. Popp, Liebig's Annalen, vol. 155, p. 348, 1870.

[b] See analysis by O. D. Allen, Rept. U. S. Geol. Explor. 40th Par., vol. 2, p. 749, 1877.

[c] See p. 123, *ante*.

[d] Natural soda; its occurrence and utilization: Bull. U. S. Geol. Survey No. 60, pp. 27–101, 1890. Cf. E. Le Neve Foster, Proc. Colorado Sci. Soc., vol. 3, p. 245, 1890, for data concerning Owens Lake. See also G. Lunge, Zeitschr. angew. Chemie, 1893, p. 3.

At Owens Lake, Inyo County, California, the manufacture of sodium carbonate has been carried out upon a commercial scale. In order to determine the most favorable conditions for the process, Chatard subjected a quantity of the water to fractional crystallization and analyzed the salts which were successively deposited. Two concordant series of experiments were made, together with a less complete but corroborative set, on water from Mono Lake. The results of the first group were as follows:

Analyses of salts deposited by fractional crystallization from water of Owens Lake, California.

A. The natural water of Owens Lake. Specific gravity 1.062 at 25°. Salinity 77.098 grams per liter. This analysis was cited on page 124 with all carbonates as normal; it is here restated in conventional form.

B. First crop of crystals. Water concentrated to one-fifth its original volume. Specific gravity of mother liquor 1.312 at 27.9°.

C. Second crop of crystals. Specific gravity of mother liquor 1.312 at 25°.

D. Third crop of crystals. Specific gravity of mother liquor 1.315 at 26.25°.

E. Fourth crop of crystals. Specific gravity of mother liquor 1.327 at 35.75°.

F. Fifth crop of crystals. Specific gravity of mother liquor 1.300 at 13.9°. This crop was obtained by chilling the solution, in order to determine the effect of cold.

	A.[a]	B.	C.	D.	E.	F.
H_2O	.....	14.51	4.33	3.43	2.24	11.03
Na_2CO_3	34.95	43.75	22.84	18.19	12.51	55.04
$NaHCO_3$	7.40	30.12	10.53	4.06	3.88	4.09
Na_2SO_4	14.38	3.18	25.44	26.70	19.01	5.70
NaCl	38.16	7.44	35.06	45.59	60.99	19.16
$Na_2B_4O_7$	.63	.....	.....	.....	.....	.....
$NaBO_2$	.....	.....	.....	.....	.....	[b] 2.01
KCl	4.07	1.07	1.12	1.14	1.21	2.93
$(CaMg)CO_3$	.08	.14	}	}	.....	.....
$(AlFe)_2O_3$	.05	.01	.09	.06	.01	.02
SiO_2	.28	.055	}	}	.05	.16
Organic matter	.....	.032	}	}	.....	.....
Insoluble	.....	.078	.....	.....	.....	.....
	100.00	100.385	99.41	99.17	99.90	100.14

[a] Composition of the anhydrous residue.
[b] Chatard supposes that the biborate could not exist in so strongly alkaline a solution as the mother liquor from which this crop was obtained.

From these analyses we see that the first crop of crystals consists largely of trona, $Na_2CO_3.NaHCO_3.2H_2O$, with a small excess of the normal carbonate, some chloride, and some sulphate. In C, D, and E the carbonates diminish, but the normal salt is even more largely in excess, while the chlorides increase rapidly. The final, chilled solution deposits chiefly sodium carbonate, with some chloride and less sulphate. The order of deposition is trona, sodium sulphate, sodium chloride, and finally, if we ignore the minor constituents of the water, the very soluble normal carbonate. Of the trona itself Chatard made several analyses, and he also prepared a series of artificial products, which established the true formula of the compound.[a] The best

[a] Cf. also C. Winkler, Zeitschr. angew. Chemie, 1893, p. 446; and B. Reinitzer, idem, p. 573.

specimen of trona from Owens Lake had the composition given in the first column below, which is compared with the composition as calculated theoretically.

Composition of trona from Owens Lake, California.

	Found.	Calculated.
Na_2CO_3	45.86	46.90
$NaHCO_3$	36.46	37.17
NaCl	.32	.....
Na_2SO_4	1.25	.....
H_2O	16.16	15.93
Insoluble	.02	.....
	100.07	100.00

The prevalent view concerning the origin of the Lahontan alkalies was stated in Chapter V (p. 124). The waters of the Bonneville basin, or of Great Salt Lake, originate in an area of sedimentary rocks and contain chiefly substances which were formed during earlier concentrations. In one sense, then, we may call the residues of that region secondary depositions. The Lahontan area, on the other hand, is rich in volcanic materials, from which, by percolating waters charged with atmospheric or volcanic carbon dioxide, the soluble substances were withdrawn. These substances have accumulated in the waters of the basin, except for the calcium carbonate, which is now seen in the enormous masses of tufa so characteristic of the region. To Mono and Owens lakes, lying just outside of the Lahontan basin, the same observations apply. Alkaline carbonates, together with sulphates and chlorides, have been formed by solution from eruptive rocks, and concentrated in these waters and their residues. The seepage waters from fresh springs near Owens Lake percolate through beds of volcanic ash, and contain even a higher proportion of alkaline carbonates than the lake itself.[a] The rocks from which the salts were originally derived seem to have been mainly rhyolites, andesites, and other varieties rich in alkalies and relatively poor in lime. Had lime been present in larger quantities more calcareous sediments and gypsum would have formed, with less of the alkaline carbonates, or even none at all.

This theory, however, which attributes the presence of alkaline carbonates to a direct derivation from volcanic rocks, is not the only hypothesis possible. Even if it holds with respect to the Lahontan waters it is not necessarily valid elsewhere. In order to account for

[a] See analyses by T. M. Chatard, Bull. U. S. Geol. Survey No. 60, p. 94, 1890. Chatard also discusses the origin of the carbonates and cites the views of earlier investigators concerning other localities.

the existence of sodium carbonate in natural waters, T. Sterry Hunt [a] assumed a double decomposition between sodium sulphate and calcium bicarbonate, gypsum being thrown down. A similar reaction is accepted by E. von Kvassay [b] in his study of the Hungarian soda, only in this case sodium chloride is taken as the initial compound. The latter salt is supposed to react upon calcium bicarbonate, yielding sodium bicarbonate, which effloresces, while the more soluble calcium chloride, simultaneously formed, diffuses into the ground. E. W. Hilgard [c] has shown experimentally that both reactions are possible, and that either sodium sulphate or sodium chloride can react with calcium bicarbonate, forming strongly alkaline solutions. From such solutions crystals of gypsum can be deposited, while sodium bicarbonate remains dissolved. In Hilgard's experiments, however, he precipitated and removed the calcium sulphate by means of alcohol, a condition unlike anything occurring in nature. S. Tanatar,[d] therefore, repeated the experiments without the use of alcohol and confirmed Hilgard's conclusions. The reverse reaction is hindered by the crystallization of the gypsum and the washing away or efflorescence of the soluble carbonate.

E. Sickenberger,[e] who examined the natron lakes of Egypt, observed the presence in them of algæ, and noticed the evolution of hydrogen sulphide from their waters, iron sulphide being at the same time thrown down. He therefore ascribes the carbonates to the reduction of sulphates by organic matter, and subsequent absorption of carbon dioxide from the air. G. Schweinfurth and L. Lewin,[f] on the contrary, while admitting that such a process can go on to some extent, regard it as capable of accounting for only a small part of the alkaline carbonates that are formed. These lakes deposit sodium chloride, sulphate, and carbonate; and the authors attribute the last salt to double decompositions with carbonate of lime. The percolating Nile waters contain calcium bicarbonate and the soil through which it reaches the lakes is rich in salt and gypsum. These two substances first react to form sodium sulphate and calcium chloride and the former then exchanges with calcium bicarbonate, as in Hunt's and Hilgard's investigations. Sodium chloride is taken as the starting point, and from it the sulphate and carbonate are derived.

---

[a] Am. Jour. Sci., 2d ser., vol. 28, p. 170, 1859.

[b] Jahrb. K.-k. geol. Reichsanstalt, 1876, p. 427. Cf. also H. Le Chatelier on Algerian salts, Compt. Rend., vol. 84, p. 396, 1877. Von Kvassay gives a bibliography of the Hungarian occurrences and some analyses of the soda.

[c] Am. Jour. Sci., 4th ser., vol. 2, p. 123, 1896. See also paper in Rept. Univ. California Agric. Exper. Sta. 1890, p. 87, followed by an experimental research by M. E. Jaffa.

[d] Ber. Deutsch. chem. Gesell., vol. 29, p. 1034, 1896. See also a memoir by H. Vater, Zeitschr. Kryst. Min., vol. 30, p. 373, 1899.

[e] Chem. Zeitung, 1892, pp. 1645, 1691.

[f] Zeitschr. Gesell. Erdkunde, vol. 33, p. 1, 1898. Several references to bacteriological researches are given in this memoir.

We have, then, three theories by which to account for the formation of alkaline carbonates in natural waters and soils.[a] First, by direct derivation from volcanic rocks. Second, by reduction of alkaline sulphates. Third, by double decomposition between calcium bicarbonate and alkaline sulphates or chlorides. All three are possible, and all three are doubtless represented by actual occurrences in nature. The presence of sodium carbonates in the waters of hot springs, which, it may be observed, are common in the Lahontan basin, we can ascribe to the operation of the first process; the second mode of derivation is effective wherever alkaline sulphates and organic matter are found together; the third method is perhaps the most general of all. To the action between alkaline salts and calcium bicarbonate, Hilgard attributes the common presence of sodium carbonate in the soils of arid regions, a mode of occurrence which is very widespread and of the utmost importance to agriculture. The reclamation of arid lands by irrigation is profoundly affected by the presence of these salts, which sometimes accumulate to such an extent as to destroy fertility. Excessive irrigation may defeat its own purpose and destroy the value of land which might be reclaimed from the desert by a more moderate procedure.[b] The soluble salts which exist below the surface, being dissolved, rise by capillary attraction and form the objectionable crusts of "alkali."

BORATES.

Borates and nitrates are much less frequently deposited and in much smaller amounts than the salts which we have so far been considering. They are, however, important saline residues and deserve a more extended study than they seem to have yet received. In the chapter upon closed basins attention was called to the Borax Lake of northern California, and among mineral springs a number containing borates were noted. The latter were hot springs, situated in volcanic regions, as in the Yellowstone Park—a mode of occurrence which must be borne in mind if we are to determine the origin of these substances. We must also remember that borates exist in sea water, from which source the deposits at Stassfurt are supposed to be derived. Two sets of facts, therefore, have to be considered

[a] To these theories may be added a fourth, that of C. Ochsenius (Zeitschr. prakt. Geol., 1893, p. 198), who supposes that the alkaline carbonates have been formed by the action of carbon dioxide, commonly of volcanic origin, on the "mother-liquor salts." The evidence in favor of this view is so slender that a discussion of it would be hardly worth while.

[b] The reports of the Bureau of Soils, U. S. Dept. Agric., and of the agricultural experiment stations of several Western States contain abundant literature on this subject. The report of the Division of Soils for 1900 contains a paper by F. K. Cameron on the application of the theory of solution to the study of soils, in which the generation of alkaline carbonates by double decomposition is discussed on the basis of modern physical chemistry. In Bull. No. 42 of the New Mexico College of Agriculture there is a summary of the literature on alkali soils.

in dealing with this class of compounds. Let us first examine the actual occurrences of borates as saline residues.[a]

Borax Lake, Lake County, California, has been repeatedly described.[b] Its water contains chiefly sodium carbonate and sodium chloride, with borax next in importance, and it deposits the last-named salt in crystals, some of which are several inches long. More borax, however, was furnished by a neighboring smaller lake, Hachinchama. The supply probably came, according to Becker, from hot springs near the lakes, and one spring, of which the analysis has already been given, contains not only boron, but also a surprising quantity of ammonium compounds. The same association of borates with ammoniacal salts is also to be observed in the waters of the Yellowstone Park, and especially in that unique solution known as "the Devil's Inkpot." The hot springs of the Chaguarama Valley, in Venezuela,[c] furnish a similar example; and here again, as in some of the California localities described by Becker, sulphur and cinnabar are deposited. Boric acid and ammonium chloride are among the volcanic products of the island of Vulcano;[d] but the famous "soffioni" or "fumaroles" of Tuscany are of much greater importance. Here jets of steam carrying boric acid emerge from the ground and supply great quantities of that substance for industrial purposes. The following compounds of boron are deposited by the lagoons in which the boric-acid vapors are concentrated:

Sassolite	H_3BO_3 (orthoboric acid).
Larderellite	$(NH_4)_2B_8O_{13}.4H_2O$.
Bechilite	$CaB_4O_7.4H_2O$ (borocalcite).
Lagonite	$Fe'''_2B_6O_{12}.3H_2O$.

One of these salts is an ammonium borate, and another ammonium compound—boussingaultite, $(NH_4)_2Mg(SO_4)_2.6H_2O$—is also formed at this locality. According to C. Schmidt[e] the condensible vapors from the fumaroles of Monte Cerboli contain boric acid and ammonia in considerable amounts, with much less hydrogen sulphide. Water issues with the vapors, and in samples condensed from several vents C. M. Kurtz[f] found solid contents ranging from less than 1 to more than 7 grams per liter. Four of the lagoon waters examined by Kurtz contained the following quantities of foreign matter:

[a] For general information about American localities see Mineral Resources U. S., 1882, p. 566; 1883–84, p. 858; 1889–90, p. 494; and 1901, p. 869, U. S. Geol. Survey.

[b] Geol. Survey California, Geology, vol. 1, p. 97, 1865. G. F. Becker, Mon. U. S. Geol. Survey, vol. 13, pp. 264–268, 1888. H. G. Hanks, Third Ann. Rept. State Mineralogist (California). For analyses of the water and of an adjacent hot spring, see *ante*, pp. 124, 154. This lake, situated about 80 miles north of San Francisco, must not be confused with Searles's "Borax Lake" in San Bernardino County.

[c] See E. Cortese, Eng. and Min. Jour., vol. 78, November 10, 1904.

[d] See A. Bergeat, Zeitschr. prakt. Geol., 1899, p. 45.

[e] Ann. Chem. Pharm., vol. 98, p. 273, 1856. In vol. 102, p. 190, 1857, Schmidt also describes the rocks of the region.

[f] *Ding. polyt. Jour.*, vol. 212, p. 493, 1874.

Foreign matter in Tuscan lagoon waters.

[Grams per liter.]

	Total solids.	Boric acid (H_3BO_3).	Ammonium sulphate.
Castelnuovo	8.565	4.154	1.695
Larderello	6.720	4.032	.760
Monte Rotondo, uppermost lagoon	2.005	1.100	.253
Monte Rotondo, lowest lagoon	22.575	19.300	.587

The high figures of the last example represent a concentration from all the upper waters, which are united at the lowest level. In the dark-brown sediment of the lagoons Schmidt found gypsum, ammonium sulphate, ammonium thiosulphate, ammonium sulphide, ammonium carbonate, magnesia, and a little soda and potash mixed with a clay derived from dolomite and colored by iron sulphide. He also analyzed the mother liquor left by the lagoon waters after most of their boric acid had been deposited. I have reduced his analysis to percentages of total solids, and essentially to ionic form, except that for the excess of boric acid I prefer to use the symbol H_3BO_3. Schmidt gives the total solids as 16.374 grams per liter, reckoning the free acid as B_2O_3; as recalculated the sum becomes 18.548. The revised figures are as follows:

Analysis of mother liquor from Tuscan lagoon water.

	Grams per liter.		Grams per liter.
Cl	0.39	Ca	0.16
SO_4	49.37	Mg	1.99
BO_3 in borates	2.50	$(AlFe)_2O_3$	.06
H_3BO_3	26.92	Mn_2O_3	trace
Na	.89	SiO_2	trace
K	1.01		
NH_4	16.71		100.00

In the light of all the foregoing data, we may reasonably assume that there is a relation between boric acid and ammonium, at least wherever hot springs carry appreciable quantities of borates. The boron and the nitrogen appear together, a fact which has led to the hypothesis that boron nitride, decomposed by steam, has been the parent compound.[a]

Boron nitride, BN, is a well-known artificial substance; it is very stable and, with steam, gives the required reaction, but it has not yet been observed as a natural mineral species. Its invocation, then, as

[a] R. Warington, Chem. Gaz., 1854, p. 419, with special reference to Vulcano, Lipari Islands. H. Sainte-Claire Deville and F. Wöhler, Ann. Chem. Pharm., vol. 105, p. 71, 1858. O. Popp, idem, 8th supp. Bd., p. 5, 1870. E. Bechi, Bull. Soc. ind. min., vol. 3, p. 329, 1857–58.

an agent in the production of borates is purely hypothetical, however probable it may be. The same objection applies to Dumas's supposition that boron sulphide, B_2S_3, also decomposed by steam, was the source of the boric acid contained in the "soffioni."[a] That hypothesis was indicated by the presence of hydrogen sulphide in the boron-bearing vapors. P. Bolley[b] suggested that a reaction of ammonium chloride on borax, which he proved to be experimentally possible, might give rise to the observed phenomena; and E. Bechi,[c] in a later memoir than the one previously cited, traced the borates to the neighboring ophiolitic serpentines, in which he found at least one inclusion of datolite, a borosilicate of lime. The serpentine, heated to 300° in a current of steam and carbonic acid, yielded boric acid, ammonium compounds, and hydrogen sulphide—the very products found in the fumaroles. Serpentine, however, is a secondary rock, and may have derived its borates and ammonium salts from the solutions which brought about the transformation of the original gabbro.

In recent years E. Perrone[d] and R. Nasini[e] have suggested that the Tuscan boric acid may be derived from the decomposition, by water, of tourmaline contained in deep-seated granites. This suggestion, however, does not account for the ammonium compounds.

An entirely different mode of occurrence for borates is shown on an extensive scale in Nevada and southern California and at a few localities in Oregon.[f] Here borax, as such, is found in considerable quantities; but the calcium salts ulexite and colemanite are by far the more important species.

In Esmeralda County, Nevada, at Teel's marsh, Rhodes's marsh, Columbus marsh, and Fish Lake, ulexite, $NaCaB_5O_9.8H_2O$, is the principal borate. It occurs in nodules, known locally as "cotton balls," which have a fibrous structure and seem to be in process of formation, the smaller masses gradually becoming larger.[g] At

[a] See paper by A. Payen on the Tuscan fumaroles, Ann. chim. phys., 3d ser., vol. 1, p. 247, 1841. He adopts Dumas's theory.

[b] Ann. Chem. Pharm., vol. 68, p. 125, 1848.

[c] Atti Accad. Lincei, 3d ser., vol. 2, p. 514, 1878. See also a summary by H. Schiff in Ber. Deutsch. chem. Gesell., vol. 11, p. 1690, 1878.

[d] Carte idrographica d'Italia, No. 31, p. 355, 1904.

[e] Abstract in Geol. Centralbl., vol. 8, p. 413, 1906. For a criticism of Perrone and Nasini, see G. d'Achiardi, Atti Soc. toscana sci. nat., Memorie, vol. 23, 1907. For a long paper on the origin of boric acid and the borates, see A. d'Achiardi, Atti Soc. toscana sci. nat. Pisa, 1878, vol. 3, fasc. 2. Earlier memoirs are by H. Coquand, Bull. Soc. géol., 2d ser., vol. 6, p. 91, 1848-49; C. Sainte-Claire Deville and F. Leblanc, Compt. Rend., vol. 45, p. 750, 1857; vol. 47, p. 317, 1858; and F. Fouqué and H. Gorçeix, idem, vol. 69, p. 946, 1869. The gases from the "soffioni" have been studied by R. Nasini, F. Anderlini, and R. Salvadori, Atti Accad. Lincei, 5th ser., Memorie, vol. 2, p. 388, 1895; as well as by some of the above-named authorities. Carbon dioxide is the principal gas.

[f] See H. G. Hanks, Third Ann. Rept. State Mineralogist California, 1883, and Am. Jour. Sci., 3d ser., vol. 37, p. 63, 1889; H. De Groot, Tenth Ann. Rept. California State Mining Bureau, 1890; G. E. Bailey, The saline deposits of California: Bull. No. 24, California State Mining Bureau, 1902. For the geology of the borax deposits in Death Valley and the Mohave Desert, see M. R. Campbell, Bull. U. S. Geol. Survey No. 200, 1902, and an article in Eng. and Min. Jour., vol. 74, p. 517, 1902.

[g] Rept. State Mineralogist Nevada 1871-72, p. 35.

Rhodes's marsh, according to Joseph Le Conte,[a] the central part of the area is occupied by a bed of common salt, around which there are deposits of sodium sulphate. Beyond the sulphate beds the borax and ulexite are found. These "marshes," which are really playa lakes, are of secondary origin; and M. R. Campbell, speaking of the similar formations in California,[b] attributes their borates to leachings from beds of Tertiary sediments.

The borates of southern California are widely scattered over a large area, which is practically a continuation of the Nevada field. They are found especially in Inyo and San Bernardino counties, in Death Valley, along the basin of the Amargosa River, and elsewhere. The locality known as Searles's marsh, or Searles's borax lake, has been worked since 1873; and as it has yielded a number of new mineral species, it deserves special consideration here. In chemical interest it rivals Stassfurt, although its systematic study is hardly more than begun. Borings at this point, according to De Groot,[c] have revealed the following succession of deposits:

Section at Searles's marsh, San Bernardino County, California.

	Feet.
1. Salt and thenardite	2
2. Clay and volcanic sand, with some hanksite	4
3. Volcanic sand and black clay, with bunches of trona	8
4. Volcanic sand, containing glauberite, thenardite, and a few crystals of hanksite	8
5. Solid trona, overlain by a thin layer of very hard material	28
6. Mud, smelling of hydrogen sulphide and containing layers of glauberite, soda, and hanksite	20
7. Clay, mixed with volcanic sand and permeated with hydrogen sulphide	230+

The borax of Searles's marsh is found chiefly in the top crust, or crystallized in the water which sometimes accumulates in the depressions of the bed. This layer is reproduced by slow degrees, through capillary action, which brings up the soluble salts from below, so that the same area can be repeatedly worked over. In the workings the following mineral species have been found:[d]

Anhydrite	$CaSO_4$.
Gypsum	$CaSO_4.2H_2O$.
Celestite	$SrSO_4$.
Thenardite	Na_2SO_4.
Glauberite	$Na_2Ca(SO_4)_2$.
Sulphohalite[e]	$Na_6(SO_4)_2ClF$.

[a] Third Ann. Rept. State Mineralogist California, p. 51, 1883.

[b] Bull. U. S. Geol. Survey No. 213, p. 401, 1903. See also J. E. Spurr, Bull. U. S. Geol. Survey No. 208, 1903.

[c] Tenth Ann. Rept. California State Mining Bureau, p. 535, 1890.

[d] De Groot also mentions cerargyrite, embolite, and gold; but these minerals have no obvious relationship to the other species.

[e] S. L. Penfield, Am. Jour. Sci., 4th ser., vol. 9, p. 425, 1900.

Hanksite	$Na_{22}K(SO_4)_9(CO_3)_2Cl$.
Borax	$Na_2B_4O_7.10H_2O$.
Colemanite	$Ca_2B_6O_{11}.5H_2O$.
Calcite	$CaCO_3$.
Dolomite	$MgCa(CO_3)_2$.
Natron	$Na_2CO_3.10H_2O$.
Trona	$Na_3H(CO_3)_2.2H_2O$.
Gaylussite [a]	$Na_2Ca(CO_3)_2.5H_2O$.
Pirssonite [a]	$Na_2Ca(CO_3)_2.2H_2O$.
Northupite [a]	$Na_3Mg(CO_3)_2Cl$.
Tychite [b]	$Na_6Mg_2(CO_3)_4SO_4$.
Halite	$NaCl$.
Soda niter	$NaNO_3$.
Sulphur, from reduction of sulphates.	

In the water from 15 feet below the crust, or "crystal layer," ammonium salts are reported to occur—a fact which becomes peculiarly significant when it is considered in connection with the presence of soda niter also. To this point we shall recur later. It is evident that the paragenesis of all these mineral species presents a complex chemical problem, quite analogous to that investigated by Van't Hoff in his studies of the Stassfurt beds.

About 12 miles north of Daggett, in the southern part of San Bernardino County, a still different borate deposit is found.[c] Here, interstratified with lake sediments, a solid bed of colemanite exists, which ranges from 5 to 30 feet in thickness and is highly crystalline. At one end the colemanite is much mixed with sand, gypsum, and clay, suggesting that it had been laid down at the edge of an evaporating sheet of water. Campbell regards the borax of the Amargosa marshes as probably derived from the leaching of deposits similar to this. From another point in the Mohave Desert a new mineral has been reported [d]—bakerite—having the empirical formula $8CaO.5B_2O_3.6SiO_2.6H_2O$; but its definite character is yet to be ascertained. Priceite, which is probably a massive form of colemanite, is found in Curry County, Oregon, on the shore of the Pacific. It occurs in compact nodules, from the size of an egg up to several tons in weight, associated with serpentine.[e] Pandermite, another variety of the same species, from near Panderma, on the Sea of Marmora, also forms nodules, but in a bed underlying a thick

[a] J. H. Pratt, Am. Jour. Sci., 4th ser., vol. 2, p. 123 et seq., 1896; vol. 3, p. 75, 1897.

[b] S. L. Penfield and G. S. Jamieson, idem, vol. 20, p. 217, 1905. The authors prepared tychite synthetically. Both northupite and tychite have also been made artificially by A. B. de Schulten, Bull. Soc. Min., vol. 19, p. 164, 1896, and Compt. Rend., vol. 143, p. 403, 1906. The relations between the two species are perhaps more clearly expressed by formulæ of the following type:

Tychite	$2MgCO_3.2Na_2CO_3.Na_2SO_4$.
Northupite	$2MgCO_3.2Na_2CO_3.2NaCl$.

[c] See M. R. Campbell, Bull. U. S. Geol. Survey No. 200; and W. H. Storms, Eleventh Ann. Rept. California State Mining Bureau, p. 345, 1893.

[d] W. B. Giles, Mineralog. Mag., vol. 13, p. 353, 1903.

[e] *Information received* from J. S. Diller, who has examined the locality.

stratum of gypsum. Colemanite and its modifications, then, exist under a variety of different conditions, and we can not say that it has always been produced in the same way. It is stated by Campbell,[a] however, that the lake-bed deposits of California were probably laid down during a period of volcanic activity.

Both colemanite and pandermite have been prepared artificially by J. H. Van't Hoff,[b] who acted on ulexite (boronatrocalcite) with saturated solutions of alkaline chlorides. With a solution of sodium and potassium chloride at 110° pandermite was formed, to which Van't Hoff assigns the formula $C_8H_{20}O_{38}.15H_2O$. Colemanite, $Ca_2B_6O_{11}.5H_2O$, forms from ulexite in a sodium chloride solution most readily at 70°. Van't Hoff, it will be noticed, does not regard pandermite and colemanite as identical.

Immediately south of Lake Alvord, in Harney County, Oregon, an extensive marsh is covered by an incrustation containing borax, salt, sodium sulphate, and sodium carbonate in varying proportions.[c] This locality has been worked for borax, and the deposit is said to be continually reproduced. The region calls for more complete examination, especially on the chemical side.

In the arid region of southern California beds rich in sodium nitrate are found near the borate deposits. The same association, if we can justly call it so, also exists in South America, where the soda niter of the Tarapaca and Atacama deserts is accompanied, more or less closely, by ulexite. As early as 1844 A. A. Hayes[d] described the calcium borate from near Iquique, and noted its association with glauberite, gypsum, pickeringite, and a native iodate of sodium. D. Forbes,[e] describing more fully the salines of this region, which he regarded as post-Tertiary, added salt, epsomite, mirabilite, thenardite, glauberite, soda alum, anhydrite, soda niter, and borax to the list of species. The salines themselves Forbes attributed to the concentration of sea water, but the borates were, he believed, of volcanic origin. They occur in the more elevated parts of the saline region, in which he found active fumaroles; but the latter were not examined for boron. Later[f] he was able to confirm this view by finding a calcium borate, either ulexite or bechilite, actually in process of deposition at the hot springs of Baños del Toro, in the Cordilleras of Coquimbo. L. Darapsky, in his work on the Taltal district,[g] speaks of ulexite as a regular companion of the nitrates, and especially notes the presence of borates in the waters of a lagoon at Maricunga. Farther east, in

[a] Eng. and Min. Jour., vol. 74, p. 517, 1902.
[b] Sitzungsb. Akad. Berlin, vol. 39, pp. 566, 689, 1906.
[c] W. D. Dennis, Eng. and Min. Jour., vol. 73, p. 581, 1902.
[d] Am. Jour. Sci., 1st ser., vol. 47, p. 215, 1844.
[e] Quart. Jour. Geol. Soc. London, vol. 17, p. 7, 1861.
[f] Phil. Mag., 4th ser., vol. 25, p. 113, 1863.
[g] Das Departement Taltal (Chile), Berlin, 1900. See especially pp. 149, 150, 183. An abstract is printed in *Zeitschr. prakt.* Geol., p. 153, 1902.

Argentina, several borate localities are known. J. J. Kyle[a] describes ulexite, associated with glauberite, from the Province of Salta, and refers to its existence in Catamarca. It is also found at Salinas Grandes, Province of Jujuy, according to H. Buttgenbach,[b] who describes the occurrence in some detail. The center of the deposit is covered with rock salt, 20 to 30 centimeters in thickness, and around its borders the ulexite nodules are unevenly distributed. Gypsum, soda niter, glauberite, and pickeringite are also found with it, the gypsum predominating. Boracite and carnallite are absent. The locality is overflowed in spring by water from the mountains, but is dry in summer, and Buttgenbach expresses the opinion that ulexite is produced every year at flood time. It will be remembered that this same phenomenon of growth was noted in connection with the Nevada mineral. The boric acid of the ulexite is regarded by Buttgenbach as being of volcanic origin.[c]

The old localities for borax in Tibet and the adjacent regions have been little visited by Europeans, and detailed information concerning them is very scanty. H. von Schlagintweit,[d] however, has described the great borax deposits of the Puga Valley, in Ladak, where the mineral covers the ground over a large area to an average depth of 3 feet. The borax is a deposit from hot springs, which issue more than 15,000 feet above sea level, at a temperature ranging from 54° to 58° C. The saline mass also contains free boric acid and sulphur, with less salt, ammonium chloride, magnesium sulphate, and alum, and there is much gypsum in its vicinity. No ulexite was found.

On the peninsula of Kertch, near the Sea of Azov, borax occurs among the erupted substances of the so-called "mud volcanoes."[e] It effloresces upon the surface of the dried mud, and is more or less mixed with salt and soda.

Since borates are present in sea water, it follows that they must also occur among the products of its evaporation. This conclusion is best verified at Stassfurt, where the following species are found:

Boracite	$Mg_7Cl_2B_{16}O_{30}$.
Pinnoite	$MgB_2O_4.3H_2O$.
Ascharite	$3Mg_2B_2O_5 2H_2O$.
Heintzite	$K_2Mg_4B_{22}O_{38}14H_2O$.
Hydroboracite	$CaMgB_6O_{11}.6H_2O$.
Sulphoborite	$2MgSO_4 4MgHBO_2 7H_2O$.

Of these species, hydroboracite is found in the lower deposits at Stassfurt, associated with anhydrite; the others are characteristic

[a] An. Soc. cient. Argentina, vol. 10, p. 169, 1880.

[b] Ann. Soc. géol. Belg., vol. 28, M, p. 99, 1900–1901. Analyses of the ulexite are given.

[c] In Chem. Zeitung, vol. 30, p. 150, 1906, F. Reichert describes eight of the Argentine "borateras" and gives analyses of their products.

[d] Sitzungsb. Acad. München, vol. 8, p. 518, 1878.

[e] W. S. Vernadsky and S. P. Popoff, Zeitschr. prakt. Geol., 1902, p. 79.

of the carnallite zone. That is, they are mother liquor salts, and among the latest substances to crystallize. It is also to be noted that they are essentially magnesian borates, and that calcium, which is the dominant metal in the Chilean and Californian localities, occurs in only one of the Stassfurt species. This is what we should expect from sea water, in which magnesium is abundant and calcium relatively subordinate. In any general discussion of the genesis of borates this distinction must be borne in mind.

In the gypsum beds of Nova Scotia ulexite, howlite, and cryptomorphite are found, associated with anhydrite, selenite, mirabilite, salt, aragonite, and calcite.[a] Howlite is represented by the formula $H_5CaB_2SiO_{14}$; cryptomorphite is probably $H_2Na_4Ca_6(B_4O_7)_9.22H_2O$.[b] If this gypsum is, as most authorities assume, a marine deposit, these salts occupy a position similar to that filled by hydroboracite at Stassfurt; but the total absence of magnesium is rather striking.[c]

In order to account for the origin of boric acid and saline borates, three hypotheses have been proposed and strenuously advocated. First, they may be derived from the leaching of rocks containing borosilicates, such as tourmaline, axinite, dumortierite, danburite, and datolite. Second, they are supposed to be of volcanic origin. Third, they are regarded as marine deposits. Probably each mode of derivation is represented by actual occurrences in nature, as may be judged from the evidence brought forward in the preceding pages, but the first supposition has not been directly tested at any known locality. Many rocks, especially granites and mica schists, contain tourmaline; they undergo decomposition, and boric acid is washed away; but borates from that source have not been found to accumulate in any known saline residue. They may do so, but they have not been directly traced. If, however, it could be shown that volcanic borates came from the thermal metamorphism of tourmaline-bearing rocks, the first and second hypotheses might be partly unified. Even then the question of the formation of soluble borates by weathering would be untouched.

The volcanic theory seems to fit a considerable number of borate localities, although its application to some cases may have been forced, and for others its validity has been doubted. Several writers have denied the volcanic character of the Tuscan fumaroles, despite the thermal activity of the region and the presence in it of eruptive

[a] See H. How, Am. Jour. Sci., 2d ser., vol. 32, p. 9, 1861; Phil. Mag., 4th ser., vol. 35, p. 31, 1868; vol. 41, p. 270, 1871.

[b] Calculated by F. W. C. from How's analysis.

[c] The suggestion of J. W. Dawson (Acadian Geology, p. 262, 1891), that these enormous masses of gypsum were produced by the action of acid volcanic waters on limestone, is of doubtful significance. The region, however, contains eruptive rocks in great abundance, a fact which may partly justify the speculation.

rocks.[a] That boric acid is emitted from volcanic vents is, however, unquestionable. It is there associated with ammonium salts precisely as it is at Monte Cerboli—an association which can not be overlooked or disregarded.

The marine origin of borates is most evident at Stassfurt, although even here their presence has been attributed to the injection of volcanic gases. Here, however, and also in the gypsum beds of Nova Scotia the nitrogen compounds are lacking, a clear distinction from the presumably volcanic occurrences. At Stassfurt the volcanic hypothesis seems to be quite superfluous, and the derivation of all the saline substances which there coexist can be most easily explained as due to the concentration of sea water. The existence of borates in the latter is clearly established; but whence were they derived? Any answer to that question must be purely speculative. Whether we invoke the aid of submarine volcanoes or attribute our borates to leachings from the land, we go beyond the limits of our knowledge and remain unsatisfied.

Confining ourselves, then, to considerations of a proximate character, we may fairly assert that certain borate localities are of volcanic and others of oceanic origin. Nevertheless, attempts have been made to explain all these deposits by the marine hypothesis, as in the memoirs of C. Ochsenius[b] and L. Dieulafait.[c] Dieulafait tries to prove that all saline deposits are primarily derived from sea water, in either ancient or modern times, and even the Tuscan "soffioni" are supposed by him to draw their boric acid from subterranean saliferous sediments. Mother liquors, rich in magnesium chloride and heated by steam, are thought to liberate hydrochloric acid, which, acting upon the magnesium borates, sets boric acid free, to be carried upward by the escaping vapors. These reactions are possible, but it is not proved that they have actually occurred. Ochsenius also argues in much the same way, and points out that beds of rock salt exist at no very great distance from the region of fumaroles. Their mother liquors are to his mind the source of the boric acid.

If we turn to the ulexite and colemanite beds of California and Chile, we find a distinct set of phenomena to be interpreted. Here we deal undoubtedly with ancient lake beds, but the residues contain calcium, not magnesium borate. Some of the deposits are below sea level, as at Death Valley; others are thousands of feet above, as at Maricunga; and in or near all of them nitrates are also found. Hot springs are common in both regions, in California as well as in Chile; but they have not been exhaustively studied. Do they contain boric

[a] See, for example, a letter from W. P. Jervis, published by H. G. Hanks in Third Ann. Rept. State Mineralogist California, p. 68, 1883; also L. Dieulafait, Compt. Rend., vol. 100, p. 1240, 1885.

[b] Zeitschr. prakt. Geol., 1893, pp. 189, 217. Borates especially on pp. 222, 223.

[c] *Ann. chim. phys.*, 5th ser., vol. 12, p. 318, 1877; vol. 25, p. 145, 1882. Also Compt. *Rend., vol. 85, p. 605, 1877*; vol. 94, p. 1352, 1882; vol. 100, pp. 1017, 1240, 1885.

acid and ammonia? If so, did the lake beds derive their nitrates from such sources? These questions are legitimate ones for future investigators to answer, and the replies may help to solve the problem now before us. Ammonia, by oxidation, yields nitric acid—a reaction which has been studied exhaustively in the interests of agriculture. Forbes found a calcium borate forming in a Chilean hot spring.[a] Magnesium borates do not occur in either group of localities. From these facts we see that a volcanic origin is conceivable for the deposits in question, whereas a marine source is not at all clearly indicated. Neither hypothesis can be adopted with any degree of assurance; but the volcanic theory is the more plausible of the two. As we pass on to the study of the nitrate beds, these suggestions may become a little clearer. For the moment the following summary may serve to assist future discussion:

(1) Marine deposits contain magnesium borates.

(2) Lake-bed deposits contain calcium borates, with nitrates near by.

(3) Volcanic waters and fumaroles, when they yield borates, yield ammonium compounds also.

NITRATES.

Nitrates are commonly formed in soils by the oxidation of organic matter, a process in which the nitrifying micro-organisms play an important part. In moist climates these salts remain in the ground water, are consumed by growing plants, or are washed away; in arid or protected regions they may accumulate to a considerable extent. Some nitrates are also derived from atmospheric sources, the acid being formed by electrical discharges and brought down by rain, but their amount is probably only a small portion of the entire product. Wherever organic matter putrefies in contact with alkaline materials, such as lime or wood ashes, nitrates are produced—a process which has been carried on artificially in various countries in order to supply the industrial demand for saltpeter. In sheltered places, such as caverns, calcium nitrate is often produced in large quantities, and its formation has commonly been attributed to the nitrification of bat guano.[b] This supposition, however, may not cover all cases, for W. H. Hess[c] claims that nitrates are uniformly distributed over cave

[a] Some of the Chilean thermal waters, analyzed by P. Martens (Actes Soc. sci. Chili, vol. 7, p. 311, 1897), contain both borates and ammonium salts, but not in remarkable proportions.

[b] See A. Muntz and V. Marcano, Ann. chim. phys., 6th ser., vol. 10, p. 550, 1887, on cave earth from Venezuela. For an account of saltpeter earth in Turkestan see N. Ljubavin, Jour. Chem. Soc., vol. 48, p. 128, 1885. On nitrate earth at Tacunga, Ecuador, see J. B. Boussingault, Ann. chim. phys., 4th ser., vol. 7, p. 358, 1866, followed by a letter from Chabrié on Algerian saltpeter.

[c] Jour. Geol., vol. 8, p. 129, 1900. The views advanced by Hess have been disputed by H. W. Nichols (Jour. Geol., vol. 9, p. 236, 1901), who regards guano as the chief source of cave nitrates.

floors in Kentucky and Indiana, even in the remote interiors of caverns where no guano exists. In drippings from the roof of the Mammoth Cave he found 5.71 milligrams per liter of N_2O_5, whose source he ascribes to percolating waters from outside. The cave, in his opinion, acts as a receptacle for stopping a part of the surface drainage, in which nitrates are produced in the usual way. Earth gathered far within the cavern contains nitrates, but almost no organic matter. The deposits of potassium nitrate found in Hungary are traced by C. Ochsenius[a] to the mother liquors of sea water, their potassium chloride being first transformed to carbonate, which latter is then nitrified in presence of organic substances. In this suggestion the hypothetical element is rather large, although it is plausibly defended.

We have already noticed the existence of soda niter among the minerals of Searles's marsh, and its probable association with ammonium compounds. The same substance is also reported to occur in large quantities at various other points in southern California, especially around Death Valley and along the boundary between Inyo and San Bernardino counties.[b] It is said to form beds associated with the later Eocene clays, and in some cases to impregnate the latter; but its direct conjunction with borates is not positively asserted, except in the locality at Searles's marsh. The fact that soda niter exists in the same region with the borates is important, however, for it correlates the California deposits with the Chilean beds, where a similar relationship is recognized. According to Bailey,[c] the rare species darapskite and nitroglauberite, previously known only from Chile, are also found in the nitrate beds of California.

In the deserts of Atacama and Tarapaca, in the northern part of Chile,[d] are found the largest known deposits of nitrates in the world. The crude sodium nitrate is termed locally "caliche," and the "calicheras" are scattered over a large area which also contains beds of salt, "salares," and the deposits of ulexite which we have already considered. According to V. L'Olivier,[e] the nitrates were first deposited, then the salt, generally to the westward of the calicheras, and finally the borates, which lie more to the east and in the higher levels of the evaporation basins. Some ulexite, however, is found in

[a] Zeitschr. prakt. Geol., 1893, p. 60.

[b] G. E. Bailey, Bull. No. 24, California State Mining Bureau, pp. 139–188, 1902.

[c] Op. cit., p. 170.

[d] The region was formerly a part of Peru and Bolivia.

[e] Ann. chim. phys., 5th ser., vol. 7, p. 289, 1876. For other details see D. Forbes, Quart. Jour. Geol. Soc., vol. 17, p. 7, 1861; C. Ochsenius, Zeitschr. Deutsch. geol. Gesell., 1888, p. 153; and L. Darapsky, Das Departement Taltal (Chile), Berlin, 1900. See also A. Pissis, Nitrate and Guano Deposits in the Desert of Atacama, London, 1878, published by authority of the Chilean Government. An earlier description of the nitrate field by J. W. Flagg is given in Am. Chemist, vol. 4, p. 403, 1874; and there is a recent important memoir by Semper and Michels, Zeitschr. Berg-, Hütten- u. Sal.-Wesen preuss. St., 1904, pp. 359–482.

the nitrate beds. A characteristic calichera, in the Atacama Desert, 50 miles west of Taltal, is described by J. Buchanan[a] as being made up of the following layers:

Section of typical calichera in Atacama Desert, Chile.

	Ft.	In.
1. Sand and gravel		1–2
2. "Chusca," a porous, earthy gypsum		6
3. A compact mass of earth and stones	2–10	
4. "Costra," a low-grade caliche, containing much sodium chloride, feldspar, and earthy matter	1–3	
5. "Caliche." (In the Tarapaca Desert it is from 4 to 12 feet thick)	1½–2	
6. "Coba," a clay		±3

The costra contains a considerable amount of bloedite; the rarer minerals, to be mentioned presently, are found in the caliche.

The composition of the caliche is very variable, as the following analyses, cited by L. Darapsky,[b] show. They represent average samples from four different localities.

Analyses of caliche from Taltal, Chile.

	A.	B.	C.	D.
$NaNO_3$	39.44	31.9	34.8	56.25
NaCl	4.18	8.0	41.5	2.75
I	.053	.02	.198	.....
$CaSO_4$	3.25	7.0	2.9	.....
$MgSO_4$	3.97	6.9	10.8	.....
Na_2SO_4	.....	8.6	.....	34.60
$MgCl_2$	3.87	.....	trace	.....
H_2O	.....	2.4	1.5	6.25
Insoluble	45.24	34.3	9.2	.01
	100.003	99.12	100.898	99.86

An apparently pure sample of the "saltpeter" from Lautaro had the subjoined composition:

Analyses of "saltpeter" from Lautaro, Chile.

$NaNO_3$	16.24	H_2O	25.40
$Ca(NO_3)_2$	40.09	Insoluble	1.22
$Mg(NO_3)_2$	16.28		100.01
$MgCl_2$	.77		
I	.01		

In these analyses no potassium salts appear; but in the examples given by L'Olivier from 2.44 to 8.55 per cent of potassium chloride is reported. It is to be expected that widely separated beds should differ in composition materially.

[a] Jour. Soc. Chem. Ind., vol. 12, p. 128, 1893. See also B. Simmersbach and F. Mayr, Zeitschr. prakt. Geol., 1904, p. 273.

[b] Das Departement Taltal (Chile), pp. 136, 139, 142, 163, Berlin, 1900.

Anhydrite, gypsum, thenardite, mirabilite, bloedite, epsomite, glauberite, and salt are associated with the nitrates, and also the four following more unusual species:

Darapskite.....$NaNO_3.Na_2SO_4.H_2O$.
Nitroglauberite.....$6NaNO_3.2Na_2SO_4.3H_2O$.
Lautarite.....CaI_2O_6.
Dietzeite.....$7CaI_2O_6.8CaCrO_4$.

The lautarite and dietzeite are remarkable as the first definitely known iodates to be found in the mineral kingdom, although A. A. Hayes[a] reported sodium iodate as long ago as 1844. In dietzeite we have a compound of iodate and chromate which is analogous to some artificial salts, but whose origin it is difficult to understand. Bromine is generally believed to be absent from the nitrate beds, but A. Muntz[b] claims to have found it, in the form of bromates, in the mother liquors from which the saltpeter had crystallized out. Furthermore, in recent years considerable quantities of perchlorates, running in exceptional cases as high as 6.79 per cent of $KClO_4$, have been discovered in Chilean nitrates.[c] Finally, these nitrates always contain some borates, perceptible traces of rubidium and lithium, but probably no cæsium.[d] The borates may be small in amount, but it is doubtful whether they are ever quite absent.

The nitrate beds of South America are not entirely confined to Chile, although the Chilean deposits outrank all others in importance. The locality at Salinas Grandes, Argentina, has already been noticed in connection with its borates, and the niter there seems to be in entirely subordinate quantities. In the Argentine Territory of Santiago del Estero, according to W. F. Reid,[e] there are salines which form crusts of salt during summer; and in the centers of the lagoons mother liquors exist, from which sodium nitrate is obtained. Zaracristi[f] has described another occurrence in the valley of the river San Sebastiano, in Colombia, where beds of sodium nitrate overlie a mixture of gypsum and calcareous clay, containing some oxide of iron and common salt. This deposit is very impure. An immense deposit of potassium nitrate, according to F. Sacc,[g] exists near Cochabamba, Bolivia, in direct association with borax. Sacc's analysis of a sample from this locality gives the following percentage composition of the salts:

[a] See *ante*, p. 201.
[b] Ann. chim. phys. 6th ser., vol. 11, p. 121, 1887.
[c] B. Sjollema, Chem. Zeitung, vol. 20, p. 1002, 1896. As the perchlorates are believed to injure the nitrate as a fertilizer, a voluminous discussion over their detection and effects has appeared in the agricultural journals.
[d] L. Dieulafait, Compt. Rend., vol. 98, p. 1545, 1884.
[e] Jour. Soc. Chem. Ind., vol. 19, p. 414, 1900.
[f] Berg. u. Hüttenm. Zeitung, vol. 55, p. 391, 1896. Two analyses are given.
[g] Compt. Rend., vol. 99, p. 84, 1884.

Analysis of nitrate deposit near Cochabamba, Bolivia.

KNO_3	60.70
$Na_2B_4O_7$	30.70
NaCl	trace
N_2O	trace
Organic matter	8.60
	100.00

The soil below the layer also contains borax. Sacc attributes the nitrates to the oxidation of ammonium salts in the soil. The association of borates with potassium nitrate is especially noteworthy, and the locality ought to receive a more detailed examination.

No satisfactory explanation of the nitrate beds has yet been found, although many theories have been proposed to account for them. C. Noellner,[a] who assumed a marine origin for the deposits, suggested that their nitrogen might be derived from the decomposition of great masses of seaweeds; but this view has not been generally accepted. For example, the beds at Maricunga [b] are 3,800 meters above sea level, and 180 miles from the coast, and other localities present similar difficulties of distance and elevation. The plain of Tamarugal, studied by W. Newton,[c] lies between the coast range and the Andes, 3,000 feet above the sea, and the nitrate beds have peculiarities which seem to preclude either an oceanic origin or a derivation from guano. Here, at least, bromides are absent, and only traces of phosphates can be found. Sea water would yield the former; from guano the latter would remain. Newton regards the nitrates as originally formed by the oxidation of organic matter in alluvial soil. Tropical floods, which cover the plain once in every seven or eight years, bring upon it the concentrated fertility of thousands of square miles and sweep the deposits to the landward side of the coast chain, where they are mainly found. This is Newton's view, although he admits the possibility that electrically generated atmospheric nitrates may also be present. The same possibility is recognized by Semper and Blanckenhorn, but rejected by A. Muntz,[d] who regards the electrical source as quite inadequate. Muntz accepts an organic origin for the nitrates, and argues that the calcium salt was first formed, as in the ordinary artificial process of nitrification. That compound then reacts with sodium chloride, forming calcium chloride and sodium nitrate, a transformation which he effected experimentally. The same result was also obtained later by A. Gautier,[e] who finds in guano the source

[a] Jour. prakt. Chemie, vol. 102, p. 459, 1867.
[b] See E. Semper and M. Blanckenhorn, Zeitschr. prakt. Geol., 1903, p. 309.
[c] Jour. Soc. Chem. Ind., vol. 19, p. 408, 1900. See also an earlier paper in Geol. Mag., 1896, p. 339.
[d] Ann. chim. phys., 6th ser., vol. 11, p. 111, 1887.
[e] Ann. mines, 9th ser., vol. 5, p. 50, 1894.

of the nitrogen. The reaction is further suggested by the facts that the Chilean niter is always associated with salt, and that calcium chloride is found in the underground waters of the Pampas. Muntz also proved, by direct experiment, that iodides in a nitrifying mixture were oxidized to iodates; and from the absence of phosphates in the nitrate beds he infers that the nitrates have been transported in solution and redeposited at a distance from the original seat of their formation.

C. Ochsenius,[a] who has written voluminously on the Chilean nitrates, regards them as derived from the mother liquors of salt deposits in the Andes. These are supposed to flow downward to the plains, their chlorides being partly converted to carbonates by carbonic acid of volcanic origin. The nitrogen is brought as ammoniacal dust from guano beds upon or near the seacoast, the heavier phosphatic particles being left behind. That such dust is carried by the winds is certain; but is it carried in sufficient amounts to account for large nitrate deposits far inland? Another difficulty is suggested by Darapsky, who points out in his work on Taltal the comparative scarcity of carbonates in the nitrate regions. Even the waters of the Pampas contain little carbonic acid, and among the mineral springs of Chile and Argentina carbonated waters are the exception rather than the rule.

That the nitrate beds are proximately derived from the evaporation of saline waters is beyond a doubt, but the evidence is strongly against their having a marine origin. The ultimate source of their nitrogen is a more troublesome question and remains, so far, unsolved. The weight of opinion favors a derivation from organic matter, and from this point of view Newton's explanation of the deposits is as satisfactory as any. Explanations of this order, however, are incomplete, for they take no account of the remarkable association of boron and nitrogen. Why do borates and ammonia occur together in volcanic waters, or borates and nitrates in the deposits of both Chile and California? This fact, which has already been emphasized, is surely not without significance, and it legitimizes the suspicion that the nitrates may be partly derived from volcanic sources. To be sure, this is only a suspicion, but it is one which ought not to be left out of account. Hot springs are common in the deserts of California and Nevada; they are also found along the volcanic Andean chain; do they contain boron and ammonia as a general rule, or only in sporadic instances? Such waters, collecting in lagoons in the presence of some organic matter and the nitrifying organisms, would yield nitrates,

[a] Zeitschr. prakt. Geol., 1893, p. 217; 1901, p. 237; 1904, p. 242. Zeitschr. Deutsch. geol. Gesell., 1888, p. 153. Ochsenius's work, Die Bildung des Natronsalpeters aus Mutterlaugensalzen, Stuttgart, 1887, I have not been able to see. His controversial papers, as cited above, give a complete exposition of his views.

and the latter would be found in the dried residues. A careful examination of all hot springs existing in the vicinity of nitrate beds is needed before we can decide how much weight can be given to this volcanic hypothesis.[a] It may be discarded, but it should at least be thoroughly investigated.

THE ALUMS.

One more class of saline residues remains to be mentioned. Waters containing sulphates of iron or aluminum form deposits of these salts, which may be neutral or basic, simple or complex. Their formation, however, is very local, and compounds of this character are rarely found far from their points of origin.

They are commonly derived, directly or indirectly, from the oxidation of sulphides, and occur as incrustations or even as stalactites, around mineral springs, or in the shafts or tunnels of mines. Acid solutions, produced by the oxidation of pyrite, act upon aluminous rocks and form sulphates of alumina. Alunite and alunogen are among the commoner species so generated. Alunogen and halotrichite, the latter a sulphate of aluminum and iron, are found in large quantities in Grant County, New Mexico.[b] Sulphates of iron of numerous species are especially abundant in the arid region of Chile. Sulphates of zinc, copper, cobalt, and nickel are deposited by mine waters. Some of the species thus developed will be considered in subsequent chapters, either in relation to the decomposition of rocks or in connection with the study of metallic ores.

---

[a] According to T. Van Wagenen (Min. and Sci. Press, vol. 84, p. 63, 1902), sodium nitrate is found in and around an extinct hot spring at the foot of the Humboldt Sink, Humboldt County, Nev.

[b] See C. W. Hayes, Bull. U. S. Geol. Survey No. 315, p. 215, 1907.

CHAPTER VIII.

VOLCANIC GASES AND SUBLIMATES.

GASEOUS EMANATIONS.

Regardless of all speculations as to the origin of the lithosphere or as to the nature of the earth's interior, we must recognize the fact that some rocks were formed by the cooling of molten materials, and we can study the phenomena of their development quite independently of cosmogonic hypotheses. Fluid magmas are seen to issue from the earth and to solidify as lavas; they may be emitted quietly or with explosive violence, and they are accompanied by gaseous or vaporous emanations, which either escape into the air, are partially occluded by the cooling mass, or condense in the form of water. Gases, water, mud, and fused or incandescent rocks are thrown out by volcanoes, and many of the attendant phenomena can be directly observed, or even reproduced in the laboratory. To the geophysicist the nature of the volcanic forces is a prime subject of interest; chemistry concerns itself more with the nature of the products, and the latter theme is the one which demands our attention now.

During a volcanic eruption the gaseous emanations are the first to appear, and their evolution continues more or less conspicuously until the discharge ends. Their emission does not cease even then, for gases are given off from the cooling lavas, and also from the hot springs and solfataras which are formed in the course of the outbreak. These gases vary much in character, and in a single eruption they may present great differences in composition, changing from place to place and from time to time. For analysis they are commonly drawn from vents, crevices, or fumaroles at different distances from the center of activity, for the main crater itself is rarely accessible until after the eruptions have ceased. Furthermore, it is difficult to collect the gases quite free from admixtures of atmospheric air, and the samples analyzed are therefore, as a rule, impure. Still much is known concerning them, and many analyses of these exhalations have been recorded.

By far the most abundant of the volcanic gases is water vapor or steam. It probably forms at least 99 per cent of the entire gaseous output, but it soon condenses to liquid and is added or restored to the hydrosphere. F. Fouqué,[a] observing one of the many parasitic cones

[a] See A. Geikie, Text-book of Geology, 4th ed., p. 266. I have not found the original source of this citation. It should be noted that Brun, whose work is cited later in this chapter, regards water as of minor importance among the volcanic emanations.

on Etna, estimated that in one hundred days it discharged vapor equivalent to 2,100,000 cubic meters of water, or 462,000,000 imperial gallons. This great quantity is only a small fraction of what the entire volcano must annually emit, and its proximate origin may well be a subject for speculation. To this theme we shall return presently.

The other volcanic gases, the term "gas" being used in its ordinary significance, are hydrogen, oxygen, nitrogen, argon, hydrogen sulphide, sulphur dioxide, carbon dioxide, carbon monoxide, hydrochloric acid, chlorine, methane, hydrofluoric acid, and silicon fluoride.[a] Many other substances are found among volcanic exhalations and are deposited as sublimates around vents and fumaroles. Let us consider the true gases first in order, noting in advance that the materials analyzed were dried to eliminate the overwhelming excess of water.

It is not necessary for our purposes to go any further back in time than to the middle of the last century, when R. W. Bunsen published the results of his Icelandic researches.[b] From among his analyses of volcanic gases the following examples are selected:

Analyses of volcanic gases from Iceland.

A. From a fumarole in the great crater of Hekla.
B. From a fumarole in the lava of 1845, Hekla.
C. From the solfatara of Krisuvik.
D. From a fumarole a quarter of a league distant from Krisuvik.
E. From a group of fumaroles at Reykjalidh, in the extreme north of Iceland.

	A.	B.	C.	D.	E.
N_2	81.81	78.90	1.67	0.50	0.72
O_2	14.21	20.09	.....	.....	.....
H_2	.....	.....	4.30	4.72	25.14
CO_2	2.44	1.01	87.43	79.07	50.00
H_2S	none	.....	6.60	15.71	24.12
SO_2	1.54	.....	.....	.....	.....
	100.00	100.00	100.00	100.00	99.98

The water condensed from the fumaroles of Hekla carried a little hydrochloric acid, but in amounts too small for determination.

Among the sublimates formed by these fumaroles, Bunsen noted sulphur and various metallic chlorides, especially common salt. One sublimate, however, contained 81.68 per cent of ammonium chloride.

Because of their accessibility the Italian volcanoes have been studied with peculiar thoroughness, and with regard to their gaseous exhalations the data are most abundant. In 1856 C. Sainte-Claire Deville[c] published a description of the fumaroles found on Vesuvius

[a] The two fluorine compounds are reported by A. Scacchi from Vesuvius, Catalogo dei minerali vesuviani, Naples, 1887. See also E. S. Dana, System of Mineralogy, 6th ed., p. 169.

[b] Ann. chim. phys., 3d ser., vol. 38, p. 215, 1853. For these analyses and others, see pp. 260–266. An earlier, classical memoir by Élie de Beaumont, entitled "Émanations volcaniques et metallifères," appeared in Bull. Soc. géol., 2d ser., vol. 4, p. 1249, 1847.

[c] Bull. Soc. géol. France, 2d ser., vol. 13, p. 606, 1855–56; vol. 14, p. 254, 1856–57.

during the eruption of 1855, which he classified in the order of diminishing volcanic intensity. The classes proposed are as follows:

1. Dry fumaroles. Sublimates of metallic chlorides, with traces of sulphates. Sometimes fluorides are formed, as observed by Scacchi on the lava of 1850. These fumaroles are emitted directly from incandescent lava, and the subliming vapors are mixed with a gas which is essentially atmospheric air. A special group of dry fumaroles emit ammonium chloride.

2. Acid fumaroles. Water vapor, mixed with hydrochloric and sulphurous acids. Commonly accompanied by chlorides of iron and copper, which are deposited around the vents. The vents occur on lava, either in the main crater or along the fissure of eruption. The hydrochloric acid is very largely in excess of the sulphurous.

3. Fumaroles emitting water vapor containing hydrogen sulphide or free sulphur. Their temperature rarely exceeds 80°.

4. Mofettes. Emissions of water vapor with carbon dioxide. These appear where the volcanic intensity has become very slight.

5. Fumaroles emitting water vapor alone.

Although, as we shall see later, this classification is incomplete, it serves a useful purpose in giving a rough outline of the phenomena. At the point of greatest activity dry vapors appear; farther away, or as cooling progresses, acids are formed, and emanations of carbon dioxide mark the dying out of the volcanic energy. But there are fumaroles, like some of those in Iceland, which do not fall in any one of these classes.

In 1858 C. Sainte-Claire Deville and F. Leblanc[a] published their analyses of volcanic gases, not only from Vesuvius, but also from Vulcano, Etna, and other localities. A fumarole in the crater of Vesuvius, emitting a gas of extremely suffocating odor, yielded hydrochloric acid and sulphur dioxide in the ratio of 86.2 : 13.8. The bulk of the gas, after removal of these substances and water, was essentially atmospheric air slightly impoverished in oxygen. Other Vesuvian fumaroles also emitted similar air, with small but variable admixtures of sulphur dioxide, hydrogen sulphide, and carbon dioxide. Sulphur dioxide and carbon dioxide, however, were mutually exclusive and never occurred together. The emanations from Etna resembled those from Vesuvius.

At Vulcano, Deville and Leblanc made a number of striking observations, which are well illustrated by the following selected analyses:

Analyses of gases from Vulcano.

A. Gas from the crater issuing at a temperature above the melting point of lead. This fumarole deposits boric acid. The gas was collected from a vent which emitted flames.

B. A gas similar to the foregoing, but not accompanied by boric acid.

C. Sulphurous fumarole from the north flank of Vulcano.

D. Gas from a cavity filled with hot water, known as "Acqua-Bollente," and situated near the seashore.

E. Gas from depressions still farther from the crater, collected over water having a temperature of 25° C.

[a] Ann. chim. phys., 3d ser., vol. 52, p. 5, 1858.

	A.	B.	C.	D.	E.
CO_2	none	none	none	6.4	86.0
SO_2	39.13	27.50	69.6	.....	.....
H_2S	.....	.....	.....	83.1	.....
O_2	10.10	14.02	5.5	.7	none
N_2	50.77	58.48	24.9	9.8	14.0
	100.00	100.00	100.0	100.0	100.0

These analyses show very well the progressive change in the fumaroles as they recede from the eruptive center. At the end of their memoir Deville and Leblanc give analyses of gases emitted from various springs in Sicily, which have some relations to the volcanic activity of Etna. Some of them give off mainly carbon dioxide; others yield methane, CH_4, in considerable quantities. A few analyses will illustrate the character of these exhalations.

Analyses of gases from Sicilian springs.

A. From the Lake of Palici. B. From the Salinelle of Paterno. C. From the Macaluba de Xirbi. D. From the Macaluba de Girgenti.

	A.	B.	C.	D.
CO_2	94.70	90.7	0.70	1.15
O_2	1.10	1.0	5.17	1.70
N_2	3.52	3.3	20.40	6.75
CH_4	.68	5.0	73.73	90.40
	100.00	100.0	100.00	100.00

The conclusion finally stated by Deville and Leblanc is as follows: The nature of the emanations from a given point varies with the time which has elapsed since the beginning of the eruption; the fumaroles at different points vary with their distance from the volcanic center. In both cases the order of variation is the same.

In 1865 F. Fouqué [a] studied the Italian field with special reference to the exhaled gases. In the crater of Vulcano he examined three fumaroles, at different temperatures, with results as follows:

Analyses of gases from fumaroles at different temperatures, Vulcano.

A. Temperature above 350°. B. Temperature 250°. C. Temperature 150°.

	A.	B.	C.
$HCl+SO_2$	73.80	66.00	27.19
CO_2	23.40	22.00	59.62
O_2	.52	2.40	2.20
N_2	2.28	9.60	10.99
	100.00	100.00	100.00

In these gases the hydrochloric acid was most abundant, the sulphur dioxide being almost negligible. Around the vents realgar,

[a] Compt. Rend., vol. 61, pp. 210, 421, 564, 754, 1865.

ferric chloride, and ammonium chloride were deposited. Another group of fumaroles, at a temperature of 100°, gave deposits of sulphur, sometimes with and sometimes without boric acid. Their composition is given below, under D and E.

Analyses of gases from fumaroles, Vulcano.

	D.	E.	F.
HCl	7.3	none	.....
H_2S	10.7	trace	17.55
CO_2	68.8	63.59	77.02
O_2	2.7	7.28	.70
N_2	11.2	29.13	4.73
	[a] 100.7	100.00	100.00

[a] This summation suggests a misprint somewhere in the original column of figures.

Analysis F represents gas from the fumarole known as "Acqua-Bollente," which was examined by Deville and Leblanc nine years earlier. The loss of hydrogen sulphide and the gain of carbon dioxide during that period are most striking and show a decrease of volcanic activity.[a] The temperature of the fumarole is given as 86° C. Fouqué's analyses of gases from two small solfataras at Pozzuoli, near Vesuvius, also indicate a relationship between composition and temperature.

Analyses of gases from Pozzuoli.

	G (temperature 96°).	H (temperature 77.5°).
H_2S	11.43	none
CO_2	56.67	15.09
O_2	5.72	15.51
N_2	26.18	69.40
	100.00	100.00

An elaborate examination of the gases emitted by Etna during several eruptions led O. Silvestri[b] to conclusions much like those reached by Deville and Leblanc, and he described fumaroles of several classes, representing a progressive diminution of volcanic intensity. The data may be briefly summarized as follows:

1. The fresh, still flowing lava acts like one great fumarole, and emits from its surface white fumes. These are partly condensible, yielding a solid, saline residue and a small amount of liquid containing free hydrochloric and sulphurous acids. The incondensible gas, as in the cases previously noted, is essentially atmospheric air slightly deficient in oxygen. One sample, upon analysis, gave

[a] See note by Deville, Compt. Rend., vol. 61, p. 567, 1865. For recent analyses of gases from Italian volcanic sources, see R. Nasini, F. Anderlini, and R. Salvadori, Gazz. chim. ital., vol. 36, fasc. 1, p. 429, 1906.

[b] I fenomeni vulcanici presentati dell' Etna, etc., Catania, 1867. The data here given are from an abstract by G. vom Rath, Neues Jahrb., 1870, pp. 51, 257. See also the great monograph, "Der Aetna," by Sartorius von Waltershausen and A. von Lasaulx, 2 vols., *Leipzig, 1880.*

O_2, 18.79 per cent; N_2, 81.21 per cent. The white residue contained chiefly sodium chloride and carbonate, and three deposits collected from the surface of the lava had the composition shown in the subjoined table. As the lava cools, the exhalations become localized and change their character with decreasing temperature.

Analyses of deposits from surface of lava.

NaCl	50.19	63.02	76.01
KCl	.50	.27	.03
Na_2CO_3	11.12	6.49	2.11
Na_2SO_4	1.13	trace	.75
H_2O	30.76	30.22	21.10
	100.00	100.00	100.00

In some cases the fumes also contain copper chloride, which forms, on the lava, deposits of atacamite and tenorite, the latter, obviously, by oxidation.

2. Ammonium-chloride fumaroles, which are divided into two subclasses. First, acid fumaroles, which form mostly upon the terminal walls of the lava stream and emit much hydrochloric acid. They also contain ferric chloride, which is partly condensed as such and partly oxidized to hematite. As the temperature falls they develop hydrogen sulphide and deposit crystals of sulphur. Second, alkaline fumaroles, which are free from hydrochloric acid and ferric chloride and deposit only ammonium chloride. They represent a lower temperature than the acid type. The gaseous portion of these exhalations, acid or alkaline, is still essentially air, containing from 81.19 to 84.17 per cent of nitrogen.

3. Water fumaroles, which give off only water vapor, mixed with impoverished air. Temperature relatively low.

4. Fumaroles emitting water vapor and carbon dioxide, the last phase of activity. The gases from two of three fumaroles in the crater of Etna, analyzed by Silvestri, had the following composition:

Analyses of fumarole gases from Mount Etna.

N_2	77.28	79.07
O_2	17.27	18.97
CO_2	5.00	1.61
H_2S	.45	.35
	100.00	100.00

Although the observations made by T. Wolf[a] at Cotopaxi were only qualitative, they confirm the belief that a regular order exists in the composition of volcanic exhalations. Near the crater the fumes of hydrochloric acid were overwhelming and there was a suspicion of free chlorine. At lower levels on the mountain hydrogen sulphide was recognized, and occasionally sulphur dioxide. The order, so far as it was studied, is the same as that noted in the volcanoes of the Mediterranean.

In his great monograph on the volcanic eruptions of Santorin,[b] F. Fouqué discusses at some length the gaseous emanations, in which, as in the Icelandic craters, free hydrogen appeared, and also small quantities of hydrocarbons. The great eruption of Nea Kaméni, one

[a] Neues Jahrb., 1878, p. 163.

[b] Santorin et ses éruptions, Paris, 1879, 4°.

of the islands of the archipelago, began in January, 1866, and some of the gases analyzed were collected in March. For the first time hydrogen and marsh gas were taken from an active volcano in the presence of true volcanic flames, and it was shown beyond reasonable doubt that in the central fires water had been dissociated into its elements. Ordinarily the combustible gases are burned as soon as they reach the air, but the peculiar conditions prevailing at Santorin permitted their accumulation unchanged and rendered their complete identification possible. The subjoined analyses represent mixtures containing gases of this class:

Analyses of volcanic gases from Santorin.

A. Gas collected on Nea Kaméni, March 17, 1866, from the surface of sulphurous water in a fissure between Giorgios and Aphroessa, temperature 78°. Three other similar analyses are tabulated with this.

B. From the same fissure on Nea Kaméni, temperature 69°. Collected March 25, 1866.

C. Gas collected March 7, 1867, over sea water, near the end of a still incandescent lava stream.

D. Occurrence similar to C, but from a different stream. Taken March 5, 1867.

	A.	B.	C.	D.
H_2S	trace	trace	.....	.....
CO_2	36.42	50.41	0.22	none
H_2	29.43	16.12	56.70	1.94
CH_4	.86	2.95	.07	1.00
O_2	.32	.20	21.11	[a] 24.94
N_2	32.97	30.32	21.90	72.12
	100.00	100.00	100.00	100.00

[a] 25.94 in table, but corrected in list of errata at the end of the volume.

Gas C was a true explosive mixture, which detonated violently upon contact with a flame. In collecting it special care was taken to avoid an admixture of air; its oxygen, therefore, is not from extraneous sources. It is possible, however, that both the oxygen and the hydrogen in this instance came from the decomposition of sea water in contact with hot lava, although Fouqué believed that they were present in the molten stream. In 1866 the largest proportions of hydrogen were found in gases taken from the principal fissures of the eruption, and they diminished in quantity with the distance of their points of issue from the focus of activity. A precisely similar diminution follows the lapse of time, as shown by analyses A and B of gases from the same locality, but collected eight days apart.

Gases collected in May, 1866, and some taken at greater distances from the center of eruption consisted either of carbon dioxide or of atmospheric air which had been entangled in the lavas. Some were heavily loaded with water vapor, which, when condensed, gave a solution containing hydrochloric and sulphuric acids, the former, as in the instances previously cited, being largely in excess of the latter. Several of the dried gases had the composition shown in the subjoined table.

Analyses of volcanic gases from Santorin.

A. Gas taken May 4, 1866, from the bottom of a fissure on Nea Kaméni. Collected over sulphurous water, at temperature 56°.

B. Collected May 12, 1866, at the foot of the cone Giorgios, from a small fumarole surrounded by crystals of sulphur. Temperature 87°.

C. Like B and near it, the sulphur partly crystallized and partly fused. Temperature 122°.

D. Gas from periphery of eruptive field, March, 1867.

E. Gas collected near the port of St. George of Nea Kaméni, March 9, 1867.

	A.	B.	C.	D.	E.
H_2S	trace	0.42	0.90	.....	.....
CO_2	95.37	5.88	12.24	none	56.63
O_2	.49	18.99	16.41	20.62	1.84
N_2	4.14	74.71	70.45	79.38	41.41
CH_4	.....	.....	.....	.....	.12
	100.00	100.00	100.00	100.00	100.00

These analyses all tell the same story as that given by the Italian investigations; carbon dioxide appears as the volcanic intensity dies away; only at Santorin the maximum of activity is represented by hydrogen, and the acid products were less completely examined.

For other volcanic regions the data relative to gaseous exhalations are unfortunately very meager. Our list must close with three analyses by H. Moissan [a] of gases from West Indian fumaroles, which are interesting on account of the determinations of argon. The analyses are as follows:

Analyses of gases from West Indian fumaroles.

A. From a fumarole on Mont Pelée, Martinique. Gas collected by Lacroix after the great eruption of May, 1902. Temperature about 400°. Gas at first saturated with steam. Around this vent ammonium chloride and sulphur were deposited.

B. From the Fumarole du Nord, Guadeloupe.

C. From the Fumarole Napoléon, Guadeloupe.

Gases A and B, previous to analysis, were both saturated with water.

	A.	B.	C.
CO_2	15.38	52.8	69.5
CO	1.60	none	none
CH_4	5.46	none	none
H_2	8.12	none	none
O_2	13.67	7.5	2.7
N_2	54.94	36.07	22.32
A	.71	.73	.68
HCl	trace	trace	none
H_2S	.....	2.7	4.5
S, vapor	trace	trace	trace
	99.88	99.80	99.70

Here the recent gas is noticeably charged with combustible substances, the lower activity of Guadeloupe being shown by their absence and by the larger quantities of carbon dioxide. Carbon monoxide appears in the Mont Pelée emanation, which emphasizes the

[a] Compt. Rend., vol. 135, 1902, p. 1085, and vol. 138, 1904, p. 936.

observations made by W. Libbey[a] on Kilauea. He, by spectroscopic study of the volcanic flames, found that hydrogen, carbon monoxide, and hydrocarbons were probably present. Hydrogen had been similarly observed by J. Janssen[b] much earlier—namely, in volcanic flames at Santorin in 1867, and at Kilauea in 1883. The spectral lines of sodium, copper, chlorine, and carbon compounds were also seen.

SUBLIMATES.

It has already been remarked that the gases issuing from a volcano are often if not always accompanied by substances which are gaseous only at high temperatures, and are deposited, upon cooling, in solid form. These sublimates, as they are called, are of many different kinds, and it is sometimes difficult to determine whether a given example is a true sublimation or is produced by secondary changes. To discriminate between the products of direct condensation from vapor and substances due to the action of the gases upon lava is not always easy. Some of the so-called sublimates are nonexistent at high temperatures, and are formed only upon cooling;[c] others result from decompositions of volatile matter; and still others are generated by reactions between different gases. For example, sulphur may be directly sublimed; it may be formed by the decomposition of hydrogen sulphide, or by the partial oxidation of that compound; and it is precipitated from mixtures of hydrogen sulphide and sulphur dioxide, two compounds which can not exist together. When they are commingled, sulphur is set free. By either of these processes volcanic sulphur can be deposited; but only the first is strictly a sublimation—that is, the volatilization and recondensation of a substance without chemical change. It is perhaps permissible, however, to use the term sublimate a little more loosely, for rigidly accurate discrimination is not practicable in the present instance. Any solid, then, deposited by or from volcanic gases, may be regarded conventionally as a sublimate.

The most conspicuous of all the volcanic sublimation products is undoubtedly native sulphur. It is found in or near all active volcanic craters, and it often contains appreciable quantities of selenium, as in the well-known selensulphur of the Lipari Islands. Tellurium has been found in Japanese sulphur,[d] to the extent of 0.17 per cent; and A. Cossa[e] reports it as present in some of the soluble salts which are formed stalactitically in the crater of Vulcano. The last-named locality has been studied with more than ordinary thoroughness, and among its fumarole deposits, which are partly sublimates

[a] Am. Jour. Sci., 3d ser., vol. 47, p. 372, 1894.
[b] Compt. Rend., vol. 64, p. 1303, 1867; vol. 97, p. 601, 1883.
[c] For example, ammonium chloride, which, when vaporized, is dissociated into $NH_3 + HCl$.
[d] E. Divers and T. Shimidzu, Chem. News, vol. 48, p. 284, 1883.
[e] *Zeitschr. anorg.* Chemie, vol. 17, p. 205, 1898.

and partly secondary products, A. Bergeat [a] names realgar, boric acid, sodium chloride, ammonium chloride,[b] ferric chloride, glauberite, lithium sulphate, sodium sulphate, alum,[c] hieratite,[d] and compounds of cobalt, zinc, tin, bismuth, lead, copper, and phosphorus. The chlorides named in this list are commonly found in volcanic craters, and the chlorides of potassium, calcium, magnesium, ferrous iron, manganese, lead, and aluminum have also been observed.

At Vesuvius A. Lacroix [e] found large crystals of potassium chloride and other crystals consisting of a double chloride of potassium and manganese. Mixed chlorides of sodium and potassium are reported by E. Casoria [f] and G. Freda.[g] These salts, however, are interpreted by F. Henrich [h] as secondary, formed by the action of moisture and hydrochloric acid on the alkaline silicates of the heated lavas. From ferric chloride the rare minerals kremersite, $KNH_4FeCl_5.H_2O$, and erythrosiderite, K_2FeCl_5, are derived, and also hematite; while copper chloride yields the oxide, tenorite; chlorothionite, $K_2SO_4.CuCl_2$; dolerophanite, Cu_2SO_5; and cyanochroite, $K_2Cu(SO_4)_2.6H_2O$; with some hydrous chlorides and oxychlorides. The simple anhydrous chlorides are the true sublimates; the other compounds are generated from them by secondary reactions. From the fluorine gases we get hieratite, ammonium silicofluoride, rarely fluor spar, and the oxyfluoride of calcium and magnesium, nocerite. Most of these substances were first described from Vesuvius, and we owe our knowledge of them to the indefatigable labors of A. Scacchi, who has also described many sulphates, simple, double, or basic, which are formed by the action of solfataric vapors upon the surrounding rocks. Similar sulphates, of sodium, potassium, calcium, magnesium, and aluminum, were found by A. Lacroix [i] among the fumarole products of Mont Pelée. Sodium carbonate is also produced in a secondary way. Silver was discovered by J. W. Mallet [j] in volcanic ash from Cotopaxi and Tunguragua; and it is quite probable that this metal, which volatilizes readily, was ejected as vapor. Silver

[a] Die Aeolischen Inseln: Abhandl. Math.-phys. Classe, K. bayer. Akad., vol. 20, Abth. 1, p. 193, 1899.

[b] Containing, according to Deville and Leblanc (Ann. chim. phys., 3d ser., vol. 52, p. 5, 1858), also iodide.

[c] Potash alum, containing cæsium, rubidium, and thallium. A. Cossa, Atti Accad. Lincei, 1878, pt. 2, p. 34.

[d] Potassium silicofluoride, K_2SiF_6. A. Cossa, Compt. Rend., vol. 94, p. 457, 1882.

[e] Compt. Rend., vol. 142, p. 1249, 1906. See also H. J. Johnston-Lavis, Nature, May 31, 1906. In Bull. Soc. Min., vol. 30, p. 219, 1907, Lacroix has described the minerals of the Vesuvian fumaroles in considerable detail.

[f] Abstract in Zeitschr. Kryst. Min., vol. 41, p. 276, 1906. Casoria found molybdenum, bismuth, copper, and zinc in Vesuvian salts.

[g] Gazz. chim. ital., vol. 19, p. 16, 1888.

[h] Zeitschr. angew. Chemie, vol. 19, p. 326, 1906; vol. 20, p. 179, 1907.

[i] Bull. Soc. min., vol. 28, p. 60, 1905. Lacroix (Compt. Rend., vol. 144, p. 1397, 1907) has recently discovered a double sulphate of potassium and lead among the fumarole products of Vesuvius. This new mineral is named palmierite.

[j] Proc. Roy. Soc., vol. 42, p. 1, 1887; vol. 47, p. 277, 1889–90.

begins to vaporize not much above its melting point; and at the temperature of the oxyhydrogen flame it can be distilled easily. Sulphides have been found as sublimation products at Vesuvius, formed perhaps by the action of hydrogen sulphide upon volatilized metallic chlorides. A. Lacroix[a] and F. Zambonini[b] both report galena among the substances produced during the eruption of April, 1906, and Lacroix mentions pyrite and pyrrhotite also.

The ammonium salts found in volcanic emanations were partially considered in the preceding pages. They are very common, but their significance has been variously interpreted. Some writers have argued that their nitrogen is derived from organic matter, such as vegetation, with which the flowing lava has come into contact—an opinion which is not well sustained. O. Silvestri,[c] in 1875, found silvery incrustations of an iron nitride, Fe_5N_3, on an Etna lava, and conducted a series of experiments to determine its origin. Fragments of lava were first heated in gaseous hydrochloric acid, when water was expelled, silica was liberated, and chlorides of iron were formed. Subsequent heating of the mass in a stream of ammonia formed hydrochloric acid again, together with ammonium chloride, hydrogen, and a nitride of iron. Ammonium chloride, acting on lava at a red heat, gave similar products. Ammonia alone, passed over heated lava, was decomposed, yielding a gas containing 90 per cent of hydrogen, while a large part of its nitrogen was absorbed.

On the other hand, it is well known that when metallic nitrides are heated in steam, ammonia is formed. We have, therefore, something like a group of reversible reactions to deal with, not strictly reversible perhaps, but of such a character as to render it uncertain which compound, nitride or ammonia, existed first. Either substance can be generated from the other. J. Stoklasa,[d] however, regards it as possible that nitrides, formed deep within the earth, are the initial compounds. At all events, he has clearly shown that the nitrogen of lava is an original constituent, and not of organic origin. In all of the lavas ejected by Vesuvius during the eruption of 1906 ammonium compounds were found, the largest amount, 300 milligrams of NH_3 per kilogram, being extracted from an olivine bomb. The water-soluble portion of the lapilli contained 33 per cent of ammonium chloride. Organic contamination, in the samples of lava examined, was impossible. An alternative hypothesis, framed to account for the volcanic ammonia, is that of O. Rosenbach,[e] who argues that it may be generated by reactions between atmospheric nitrogen and hot

[a] Compt. Rend., vol. 143, p. 727, 1906.

[b] Idem, p. 921.

[c] Gazz. chim. ital., vol. 5, p. 301, 1875; Pogg. Annalen, vol. 157, p. 165, 1876.

[d] Ber. Deutsch. chem. Gesell., vol. 39, p. 3530, 1906; Chem. Zeit., vol. 30, p. 740, 1906; Centralbl. Min. Geol. Pal., 1907, p. 161. See also R. V. Matteucci, Centralbl. Min. Geol. Pal., 1901, p. 45, on ammonium chloride in the crater of Vesuvius.

[e] *Natur. Wochenschr.*, vol. 21, p. 740, 1906.

lava, in presence of moisture and hydrochloric acid. This suggestion is supported by very little evidence and needs experimental verification.

It is difficult to assign any limit to the possibilities of sublimation within the vent of an active volcano. Given a temperature sufficiently high, and almost any mineral matter may be volatilized or decomposed into volatile constituents. In the electric furnace, H. Moissan [a] has vaporized alumina, lime, magnesia, silica, zirconia, and titanic oxide, and these substances are all found in volcanic rocks. The oxides of the iron group are more stable, and fuse but do not seem to distill. According to these observations, alumina volatilizes most easily, lime quite easily, and magnesia with less facility. P. Schützenberger [b] has observed that silica gradually loses weight in a good wind furnace, whose temperature is far below that of the electric arc; and E. Cramer [c] has completely vaporized rock crystal under similar conditions. Cramer used a Deville furnace, with gas carbon or retort graphite for fuel, with a blast of air; and in one experiment 4.517 grams of quartz were evaporated. At the temperature of melting cast iron, quartz was stable and lost no weight; although Moissan [d] has observed that at 1,200° silica appears to have an appreciable tension. According to A. L. Day and E. S. Shepherd,[e] quartz vaporizes rapidly in air at about the temperature of melting platinum. Silica, then, is volatile at temperatures which are probably reached or exceeded within the volcanic reservoirs; and it may appear among the products of sublimation. In fact, quartz, tridymite, and various silicates have been repeatedly observed in lavas under conditions which indicated an origin of this kind. A. Scacchi,[f] for example, reports leucite, augite, hornblende, mica, sodalite, microsommite, cavolinite, garnet, and possibly sanidine and vesuvianite as formed by sublimation at Vesuvius. Furthermore, experiments recently conducted by A. L. Day and E. T. Allen in the laboratory of the United States Geological Survey have shown that feldspars can be easily sublimed at the temperature of the electric arc, a temperature which is in the neighborhood of 3,700° C.[g] The actual temperature at which the volatility of silicates begins is yet to be ascertained; but it is certainly lower than that employed in Day and Allen's experiments. It may

[a] La four électrique, pp. 32–49, Paris, 1897. See also Compt. Rend., vol. 116, p. 1222, 1898.

[b] Compt. Rend., vol. 116, p. 1230, 1893.

[c] Zeitschr. angew. Chemie, 1892, p. 484.

[d] Compt. Rend., vol. 138, p. 243, 1904.

[e] Science, vol. 23, p. 670, 1906.

[f] Zeitschr. Deutsch. geol. Gesell., vol. 24, p. 493, 1872. Condensed from the Italian original by J. Roth. See also G. vom Rath, Neues Jahrb., 1866, p. 824, on augite as a fumarole product. H. Traube (Centralbl. Min. Geol. Pal., 1901, p. 679) has described the artificial production of minerals by sublimation.

[g] 3,900° to 4,000° absolute. See C. W. Waidner and G. K. Burgess, Bull. Bureau of Standards, vol. 1, p. 109, 1904.

fall within the range of volcanic temperatures; and in that case sublimation can be supposed to play an appreciable part among the phenomena of eruptions.[a] If the more volatile substances accumulate in the upper portions of a reservoir, they would appear among the first ejectamenta; and the difference between the earlier and later outflows of an eruption would be partly accounted for. Whether this factor in the eruptive process is relatively small or large can not be determined at present. It probably exists, and it may be important; but no more definite conclusion can be drawn from the established evidence.

OCCLUDED GASES.

Although we can not determine with absolute certainty the origin of volcanic gases, the subject is not entirely unsuited to scientific discussion. Some evidence exists, and from it some conclusions may be legitimately drawn. It has long been known that nearly if not quite all rocks, upon heating to redness, give off large quantities of gas—a fact which was noted by Priestley as early as 1781.[b] In recent years these gases have been elaborately studied, and from two points of view. At first they were thought to be occluded in the rocks; and, indeed, inclosures of carbon dioxide are not rare; but latterly it has been shown that igneous action may generate them from the solid minerals themselves. Let us first assemble the data, and then consider their significance.

That quartz and other crystalline minerals often contain cavities filled with carbon dioxide is well known, and inclusions of this order have been studied by several competent authorities.[c] Hawes and Wright examined the remarkable smoky quartz from Branchville, Connecticut, which contains so many inclusions of gas that it explodes almost like a percussion cap when struck with a hammer. In this case the gas, as analyzed by Wright, gave 98.33 per cent of CO_2, with 1.67 per cent of nitrogen, and traces of hydrogen sulphide, sulphur dioxide, ammonia, a fluorine compound, and possibly chlorine. Much water was also present with the gaseous inclusions. In other minerals other gases are sometimes found in notable quantities, as, for example, hydrogen sulphide in a Canadian calcite,[d] and marsh gas, which Bunsen [e] extracted from the rock salt of Wielieczka. In

[a] J. Joly (Proc. Roy. Irish Acad., 3d ser., vol. 2, p. 38, 1891) mentions the sublimation of enstatite at the highest temperatures observed on the platinum ribbon of his meldometer. In this case the temperature could not have exceeded 1,700°. Some of the so-called sublimed silicates of volcanoes, however, may not be true sublimates at all, but products of reactions between silica and volatile chlorides or fluorides. Such reactions are more than probable.

[b] See his letters to Josiah Wedgwood, in Scientific Correspondence of Joseph Priestley, edited by H. Carrington Bolton, New York, 1892, privately published.

[c] See especially W. N. Hartley, Jour. Chem. Soc., vol. 29, p. 137, 1876; vol. 30, p. 237, 1876. G. W. Hawes, Am. Jour. Sci. 3d ser., vol. 21, p. 203, 1881. A. W. Wright, idem, p. 209.

[d] *See B. J. Harrington*, Am. Jour. Sci., 4th ser., vol. 19, p. 345, 1905.

[e] *Ann. chim. phys.*, 3d ser., vol. 38, p. 269, 1853.

the latter instance the inclosed gases contained 84.60 per cent of methane, 10.35 per cent of nitrogen, and small quantities of oxygen and carbon dioxide. These minerals, however, are not volcanic, and they are cited here merely to show that gaseous inclusions are possible. The observations of W. Ramsay and M. W. Travers [a] are also interesting, for in zircon they found both argon and helium, and the latter gas was yielded by a number of other rare-earth minerals and also uraninite, all obtained from pegmatite veins.

In 1876, in the course of his investigations upon the gases evolved from meteorites, A. W. Wright [b] found that a specimen of trap, heated to redness, gave off three-fourths of its volume of gas, which contained 13 per cent of carbon dioxide, the remainder being chiefly hydrogen. In 1896 W. A. Tilden [c] made a similar observation upon the red Peterhead granite. This rock gave off 2.61 times its volume of gases, containing 24.8 per cent of CO_2 and 75.2 per cent of hydrogen. A year later [d] Tilden published the results of his experiments upon a considerable number of rocks and minerals, 24 examples in all. For most of these only partial analyses were made, but in five cases the gases evolved were more completely examined. The data are as follows for the percentage composition of the gases and for the volume obtained from a unit volume of rock:

Volume and composition of gases evolved from rocks.

Rock.	Volume of gas.	Composition of gas.				
		CO_2.	CO.	CH_4.	N_2.	H_2.
Granite	2.8	23.60	6.45	3.02	5.13	61.68
Gabbro	6.4	5.50	2.16	2.03	1.90	88.42
Pyroxene gneiss	7.3	77.72	8.06	.56	1.16	12.49
Corundum gneiss	17.8	31.62	5.36	.51	.56	61.93
Basalt	8.0	32.08	20.08	10.00	1.61	36.15

Even such a mineral as beryl gave off 6.7 volumes of gas, in which hydrogen largely predominated. The gases appeared to Tilden to be wholly inclosed in very minute cavities, so small that little was lost when the rocks were reduced to powder. Their extraction was effected by the usual process of heating the pulverized material in vacuo.

In 1898 M. W. Travers [e] described a series of experiments upon the extraction of gases from various minerals and rocks, which led

[a] Proc. Roy. Soc., vol. 60, p. 442, 1896–97. Argon and helium have also been found in malacone, a variety of zircon, by E. S. Kitchin and W. G. Winterson (Jour. Chem. Soc., vol. 89, p. 1568, 1906). Many of the rare-earth minerals, according to H. Erdmann (Ber. Deutsch. chem. Gesell, vol. 29, p. 1710, 1896), contain small quantities of nitrogen.

[b] Am. Jour. Sci., 3d ser., vol. 12, p. 171, 1876.

[c] Proc. Roy. Soc., vol. 59, p. 223, 1895–96.

[d] Chem. News, vol. 75, p. 169, 1897. Proc. Roy. Soc., vol. 60, p. 453, 1896–97.

[e] Proc. Roy. Soc., vol. 64, p. 130, 1898–99.

to results resembling those obtained by Tilden. The conclusions reached, however, were quite different; for Travers was able to show that in some cases at least the gases were not occluded, but were derived from the interaction of nongaseous substances. Chlorite, serpentine, gabbro, mica, talc, feldspar, and glauconite were studied, and in each instance the hydrogen and carbon monoxide that were evolved by heating the mineral in vacuo were quantitatively related to the ferrous oxide and water which the specimen contained. The inference is that these gases were generated by a reaction between the ferrous salts, the carbon dioxide, and the water of the original silicates. Unfortunately, Travers's conclusions can not be directly applied to Tilden's work, for the latter gave no analyses of the rocks themselves. It is noticeable, however, that the largest evolution of gas cited in Tilden's series was that from the corundum gneiss of Seringapatam, and not from the presumably more highly ferruginous pyroxene gneiss and basalt. The yield of gas from beryl was also very considerable, a fact which Travers's observations do not explain. That molten glass absorbs combustible gases, probably hydrogen, was observed by H. Sainte-Claire Deville and L. Troost.[a] The absorbed gas is largely given out on cooling, in the form of bubbles. Even solid glass, at 200° and under a pressure of 200 atmospheres, has been found by J. B. Hannay[b] to absorb oxygen and carbon dioxide. When the charged glass is cooled under pressure the gases are retained, but on quick heating to the softening point they are expelled with almost explosive violence, driving the glass into foam. By slow heating to 300° most of the dissolved gas can be quietly discharged.

The investigations of A. Gautier[c] led to the same conclusion as that reached by Travers, but the work was more extended and various methods of attack were employed. Two samples of the same granite, collected at different times and heated to 100° in vacuo with sirupy phosphoric acid, gave off the following gases, measured in cubic centimeters per kilogram of rock:

Gases evolved by granite heated to 100° with phosphoric acid.

	A.	B.
HCl and SiF_4	trace	trace
H_2S	1.33	22.7
CO_2	272.6	237.5
Hydrocarbons	12.3	5.3
H_2	53.05	191.48
N_2 (rich in argon)	232.50	102.48
	571.78	559.46

[a] Compt. Rend., vol. 57, p. 965, 1863.

[b] Chem. News, vol. 44, p. 3, 1881. A. A. Campbell Swinton (Chem. News, vol. 95, p. 134, 1907) has also shown that gases are occluded by the glass walls of vacuum tubes. Barus's work on the absorption of water by glass is considered in Chapter IX.

[c] Compt. Rend., vol. 131, p. 647, 1900; vol 132, pp. 58, 189, 1901; vol. 136, p. 16, 1903. Ann. chim. phys., 7th ser., vol. 22, p. 97, 1901.

On heating the same rock to 300° with water alone gases were evolved as follows, in cubic centimeters per kilogram:

Gases evolved by granite heated to 300° with water.

	A.	B.
H_2S	1.3	1.0
CO_2	7.2	5.3
H_2	46.0	14.6
N_2	.3	5.9

Hence it is clear that the action of water alone on an igneous rock moderately heated tends to develop gases closely similar in character to those which are emitted by active volcanoes. Heated to redness, in vacuo, powdered rocks emit much more gas, and the volcanic phenomena are imitated even more closely. In the subjoined table A, B, and C are analyses of gases thus extracted from the granite of Vire; D represents a granitoid porphyry, E an ophite, and F lherzolite. The percentages by volume are given, and the volume of gas, reduced to 0° and 760 millimeters, yielded by 1 kilogram of rock.

Analyses of gas evolved from powdered rocks heated to redness.

	A.	B.	C.	D.	E.	F.
CO_2	14.80	8.98	14.42	59.25	35.71	78.35
H_2S	trace	1.71	.69	none	.45	11.85
CO	4.93	5.12	5.50	4.20	4.85	1.99
CH_4	2.24	1.09	1.99	2.53	1.99	.01
H_2	77.30	82.80	76.80	31.09	56.29	7,34
N_2 (with argon)	.83	.42	.40	2.10	.68	trace
	100.10	100.12	99.80	99.17	99.97	99.54
Volume of gas, cubic centimeters	2,709	4,209	2,570	2,846	2,517	5,450

Before heating, these rocks were dried at 250° to 300° to remove hygroscopic moisture. The volume of gas extracted from one volume of rock amounted to 6.7 from the granite, 7.6 from the porphyry, 7.6 from the ophite, and 15.7 from the lherzolite. The granite, it will be seen, gives the smallest evolution of gas per volume of material, but it is by far the richest in hydrogen. Even in this case, according to Gautier, a cubic decimeter of granite at 1,000° would give, calculated for that temperature, about 20 liters of mixed gases and 89 liters of steam—more than one hundred times its initial volume.

In order to prove that the gases are not simply inclosed in the rocks, Gautier extended his experiments along several lines. First, he argued, inclosed gases should not vary in composition during the process of extraction, whereas gases generated by heat might do so. The latter condition held in the case of granite when two fractions of the gas were examined separately. The analyses are as follows:

Analyses of gas evolved from granite.

	First third.	Last two-thirds.
CO_2	20.19	6.13
H_2S	1.28	.41
CO	.57	1.02
CH_4	2.04	.80
H_2	75.54	91.64
N_2	.30	.30
	99.92	100.30

A similar variation was exhibited during the evolution of gas from ophite.

In his third memoir Gautier showed that ferrous silicates heated to redness in a current of steam yield a gas containing 65 per cent of hydrogen. Therefore the water of constitution in a rock, acting on the compounds of iron therein contained, can give the same reaction. To test this conclusion still further, Gautier heated 150 grams of dried and powdered ophite to redness in vacuo and obtained 2.25 grams of water and 371 cubic centimeters of gas, containing 202 cubic centimeters of hydrogen and 122 cubic centimeters of carbon dioxide. After the evolution of gas had ceased, the material was allowed to cool, and then reheated in a current of steam carrying a little carbonic acid. By this means 70 cubic centimeters of gas were developed, having, after the removal of carbon dioxide, the subjoined composition:

CO	3.32
CH_4	6.08
H_2	36.20
N_2, etc	54.20
	99.80

This gas was certainly not preexistent in the rock, for that had been previously exhausted, and yet it was moderately rich in hydrogen.

Gautier's conclusions were, in the main, confirmed by K. Hüttner.[a] He, too, found that the gases in question are generated by reactions brought about by heat within the rock; only, instead of regarding the CO as derived from the action of CO_2 on ferrous silicates, he showed that it can be produced by the reducing action of the liberated hydrogen upon CO_2. Rocks containing more or less water were heated in a stream of carbon dioxide, when both hydrogen and carbon monoxide were given off.

That such a reduction was possible had long been known; but Gautier,[b] in a later investigation, studied the reaction much more thor-

[a] Zeitschr. anorg. Chemie, vol. 43, p. 8, 1905.

[b] Compt. Rend., vol. 142, p. 1382, 1906; Bull. Soc. chim., 3d ser., vol. 35, p. 929, 1906. Gautier gives references to earlier literature.

oughly and found that it was reversible. At a white heat the reaction is as follows:

$$CO_2+3H_2=CO+H_2O+2H_2.$$

At temperatures between 1,200° and 1,250°, on the other hand, the equation becomes—

$$3CO+2H_2O=2CO_2+2H_2+CO.$$

The coexistence of water vapor, hydrogen, and both oxides of carbon in volcanic emanations thus becomes intelligible. When water emitted by heated rocks mingles with carbon dioxide from any source whatever, within the vent of a volcano, both reactions take place, and mixed gases, which sometimes contain traces of formic acid, are generated. This mixture is a powerful reducing agent, which acts upon the iron silicates in an opposite direction to that of the oxidizing vapor of water. Either oxidation or reduction is therefore possible, according to the preponderance of one constituent or another among the volcanic gases.

Going still further, Gautier[a] investigated the reactions between steam and the metallic sulphides. At incipient redness steam changes the iron sulphide, FeS, into magnetite, Fe_3O_4, with formation of free hydrogen and hydrogen sulphide. Galena, in a current of superheated steam, was partly sublimed and recrystallized as such[b] and partly decomposed into metallic lead and free sulphur. A little sulphate of lead was formed at the same time. With cuprous sulphide, under like conditions, copper was liberated and a mixture of hydrogen with sulphur dioxide was formed. The same gaseous mixture was also generated by the action of steam upon hydrogen sulphide. From these facts Gautier infers that the sulphur dioxide of volcanoes is produced by the reduction of sulphides, followed by the oxidation of the hydrogen sulphide so liberated. This oxidation can be brought about, as Gautier[c] has shown, by reactions between metallic oxides and hydrogen sulphide, a reversion of some of the other reactions studied. At a red heat steam reduces ferrous sulphide, forming magnetite. At a white heat hydrogen sulphide reconverts magnetite into FeS, and a mixture of sulphur dioxide with hydrogen is generated. Hydrogen sulphide may also react with carbon dioxide to form carbonyl sulphide, COS, and water. In short, Gautier has shown that a large number of reactions are possible, starting only with water, carbon dioxide, and the solid constituents of lavas. Many of these reactions are reversible, and they give rise to nearly all the gaseous mix-

[a] Compt. Rend., vol. 142, p. 1465, 1906; Bull. Soc. chim., 3d ser., vol. 35, p. 934, 1906.

[b] This recalls the existence, already mentioned, of galena as one of the Vesuvian sublimates.

[c] Compt. Rend., vol. 143, p. 7, 1906; Bull. Soc. chim., 3d ser., vol. 35, p. 989, 1906.

tures which appear in volcanic emanations. The nitrogen of the volcanic gases Gautier, like several other authorities, attributes to the presence of nitrides in the lava.

In a general memoir, recently published, Gautier[a] has summed up his views upon the chemistry of volcanism. The phenomena, he thinks, are due to fissuring and subsidence in the crust of the earth, whereby masses of crystalline rocks are lowered into the heated region. Gases are then developed, in accordance with the reactions that he has established, under enormous pressures and in immense quantities. To illustrate the magnitude of the phenomena to which the reactions may give rise, Gautier in one of his earlier papers shows that a cubic kilometer of granite would yield 26,400,000 metric tons of water and 5,293,000,000 cubic meters of hydrogen, measured at ordinary temperatures. That amount of hydrogen, burning, would give 4,266,000 tons of water, making nearly 31,000,000 tons in all, or as much as passes Paris in the Seine during an average flow of twelve hours. We can therefore account for the evolution of volcanic steam and gases by the action of heat alone without involving either the infiltration of sea water or unknown and imaginary sources of supply deep within the bowels of the earth. Given a mechanical source of heat and rocks of ordinary composition, and the observed chemical phenomena will follow. Gautier, however, goes further than the experimental data warrant. He supposes that the nucleus of the earth consists largely of iron, containing hydrogen and carbon monoxide in solution. He also assumes the existence of metallic carbides, from which CO and hydrocarbons may be generated. Sodium chloride, moreover, he regards as nuclear; and upon suppositions of this sort he builds up an elaborate argument, of which the soundness is yet to be established. It is rich in suggestions which may or may not bear fruit in future discoveries. The carbide theory, I may say, is not due to Gautier alone. It was also advanced by H. Moissan,[b] who attributes volcanic activity to the action of water upon metallic carbides, although these compounds are not seen as natural products on the surface of the earth. Water, acting upon the artificial carbides, develops hydrogen and hydrocarbon gases; the latter, through the influence of heat, partly polymerize to liquid or solid compounds and partly burn, yielding carbonic acid and water; and so the observed order of evolution seen in volcanic eruptions is paralleled. This view also finds some support in the observations of O. Silvestri,[c] who

[a] Ann. mines, 10th ser., vol. 9, p. 316, 1906. Compare F. Loewinson-Lessing (Compt. Rend. VII. Cong. géol. internat., p. 369, 1897), who attributes volcanic gases to the absorption of sedimentary rocks by magmas. Clays yield water, limestones furnish CO_2, etc.

[b] Proc. Roy. Soc., vol. 60, p. 156, 1896–97. See also E. Stecher, 14. Ber. Natur. Gesell. Chemnitz, 1900; A. Rossel, Arch. sci. phys. nat., 4th ser., vol., 14, p. 481, 1902; and H. Lenicque, Mém. Soc. ingén. civils, France, October, 1903, p. 346.

[c] *Gazz. chim. ital.*, vol. 7, p. 1, 1877.

obtained both solid paraffin and liquid hydrocarbons from the lavas of Etna. The theory accounts conveniently for some products of volcanism and may be true in part, for the carbides are readily formed and are likely to be present below the region to which the surface waters penetrate. If deep-seated waters really exist, then the carbide hypothesis must be abandoned, or else so qualified as to deprive it of any real significance.

In strong contrast with Gautier's conclusions are the views advanced by A. Brun,[a] who regards water as of minor importance in the production of volcanic phenomena. He agrees, however, with Gautier in believing that the gases emitted by lava at the instant of its fusion are generated within it by chemical reactions. Their sources, he thinks, are nitrides of iron and silicon, hydrocarbons, and certain chloro-silicates, such as the compound $Ca_2Cl_2SiO_3$, which he artificially prepared.[b] Hydrocarbons, in small amount, he extracted from lava, as Silvestri had done before him. From a Lipari lava, by heating to temperatures between 800° and 900°, Brun obtained abundant ammonium chloride. Quickly ignited at 900° it gave off free nitrogen. At volcanic temperatures the rock emitted chlorine and hydrochloric acid. The observed volcanic gases, according to Brun, are evolved by the action of the molten magma upon the compounds named above, and the temperatures of several stages in the process are as follows:

0° to 825°.	Volatilization of water.
825°.	First evolution of chloride vapors.
874° to 1,100°.	Temperature of explosions.
1,100°.	Mean temperature of flowing lava.

The vast clouds of vapor arising from volcanoes are thought by Brun to consist mainly of volatilized chlorides, with little or no steam. This conclusion is in direct opposition to the prevailing belief.

As between Brun and Gautier, the work of the latter seems to be more general and more conclusive. Deductions from it, however, must not be pushed too far, for the evidence does not cover all the ground. That rocks contain some gaseous inclusions is established, although hydrogen may not be among them; and these were probably entangled when the magma first solidified. Percolating waters certainly reach volcanic matter from above, and it is highly probable that some water filters in from the sea. A volcano on the seaboard could hardly escape from receiving some accessions of that kind.[c]

---

[a] Arch. sci. phys. nat., 4th ser., vol. 19, pp. 439, 589, 1905. For a popular summary of his own work, with a criticism of Brun, see Gautier, Revue scientifique, 5th ser., vol. 8, p. 545, 1907.

[b] Chlorosilicates known to exist in nature, like sodalite and several other species, are more probable sources of chlorine. Sodalite is among the minerals reported as sublimates at Vesuvius.

[c] Cf. A. Daubrée, Études synthétiques de géologie expérimentale, pp. 235–241, 1879.

What the relative magnitude of these several factors may be we have no means of determining. Furthermore, experiments like those of Gautier do not reproduce the conditions existing within a volcano. His rocks were heated under conditions which removed the gaseous products as fast as they were formed; in a volcanic reservoir they must accumulate in contact with or permeating the lava until the pressure has been relieved by an explosion. Steam may oxidize a ferrous compound, but the hydrogen in its turn is a powerful reducing agent. There are here, then, two opposing tendencies, and we can not readily decide what sort of an equilibrium would be established between them. It is probable that in the depths of a volcano temperatures prevail which dissociate water into its elements, unless the enormous pressures there existing should compel some sort of union that would otherwise be impossible. The chemistry of great pressures and concurrently high temperatures is entirely unknown, and its problems are not likely to be unraveled by any experiments within the range of our resources. The temperatures we can command, but the pressures are beyond our reach. We may devise mathematical formulæ to fit determinable conditions; but the moment we seek to apply them to the phenomena displayed at great depths, we are forced to employ the dangerous method of extrapolation, and our conclusions can not be verified.

VOLCANIC EXPLOSIONS.

It is generally admitted that the volcanic gases are the chief agents in producing volcanic explosions. This is emphasized by E. Reyer,[a] by S. A. Arrhenius,[b] and also, more recently, by C. Doelter,[c] who regards the deep-seated magmas as impregnated by gaseous mixtures, which explode upon relief of pressure. The consideration of these gases, moreover, is directly connected with various current speculations concerning the origin of the earth; and whether we incline to the nebular hypothesis or to the planetesimal conception lately developed by T. C. Chamberlin, we must take them into account. Chamberlin and R. D. Salisbury[d] regard the gases as originally entangled in the meteoroidal matter from which, according to the planetesimal hypothesis, the earth was formed; and they are therefore true additions to the atmosphere and hydrosphere. These

[a] Beitrag zur Fysik der Eruptionen, Wien, 1877.

[b] Geol. Fören. Förhandl., vol. 22, p. 411, 1900.

[c] Sitzungsb. Akad. Wien, vol. 112, p. 681, 1903.

[d] Geology, vol. 1, pp. 588–594, 602–618, 1904. See also *ante*, Chapter II, p. 52. According to Chamberlin and Salisbury, crystallization has much to do with the evolution of volcanic gases. When crystals form within a lava they give up their gaseous load, which overcharges the still fluid portions of the magma, thereby causing increased pressure and provoking explosions. See analyses by R. T. Chamberlin, of gases from the rocks and phenocrysts of a small tuff cone, Red Mountain, Arizona, cited by W. W. Atwood, Jour. Geol., vol. 14, p. 188, 1906.

authors admit that lavas, in rising to the surface, may encounter rocks saturated with moisture, and so generate some steam; but they argue that large accessions of water, such as infiltrations from the sea, would absorb more heat than the molten magma could afford to lose. Could Stromboli, for instance, which has been in continual activity for more than two thousand years, have retained its heat under such adverse conditions? The question is pertinent, but not final, for we know nothing about the relative quantities of water and lava which take part in the eruptions. A large molten reservoir and a moderate infiltration of water, a supply of heat greater than the wastage, are conceivable; and it is also to be remembered that some water lowers the melting point of a rock and so helps to preserve its fluidity. A considerable degree of cooling is not incompatible with aqueo-igneous fusion and would not necessarily check the outflow of a lava stream or the visible activity of a volcano. Arrhenius [a] claims that a continuous activity like that of Stromboli would be impossible without a steady supply of water, and he regards the sea bottom as equivalent to a semipermeable membrane through which by osmotic pressure the water is forced. This pressure, at a depth of 10,000 meters, would amount to 1,700 atmospheres. It is not as a liquid, however, but as a vapor, far above its critical temperature, that the water enters the magma, in which it is absorbed much as ordinary water is taken up by calcium chloride. During an eruption it is emitted as steam. The reverse movement of magma to the ocean is prevented, according to Arrhenius, by the impermeability of the intervening septum to the larger and heavier molecules of which the molten rock is composed, and especially to the amorphous silica which the entering water is supposed to set free. Here the nature of the fluid magma itself is in question—a subject which will be taken up more fully in the next chapter.

So far, then, we have several distinct hypotheses to account for the gaseous exhalations of volcanoes. Arrhenius and Daubrée, as well as many earlier writers, derive them from infiltrations of sea water, Arrhenius assuming osmotic pressure and Daubrée capillary attraction as the method by which entrance to the magma was effected. Chamberlin regards the gases as original inclosures within the earth, now issuing from great depths. Gautier, Moissan, and Brun assign their origin to reactions within the rocks themselves, but differ as to the details of the process.

Of all these differing views, that of Gautier involves the smallest amount of hypothesis, and it also has the merit of simplicity. It is not, however, as we have already seen, absolute and final, but it cer-

[a] Geol. Fören. Förhandl., vol. 22, p. 411, 1900.

tainly represents a part of the truth, and possibly the major portion. On the experimental side it needs further investigation, for it is difficult to suppose that a fluid magma, saturated with gas and water, could emerge from a volcano and solidify without retaining some gaseous occlusions. That is, the presence of such occlusions is not completely disproved by Gautier's experiments, and the extent to which the theory can be accepted depends upon their magnitude. Here we may properly resort to some evidence from analogy. Gaseous occlusions are taken up by iron, steel, and slags in ordinary furnace operations, and among them hydrogen is the most conspicuous.[a] Data relative to the absorption of hydrogen by iron are abundant,[b] and meteoric iron seems always to contain it.[c] From the Lenarto iron T. Graham obtained 2.85 times its volume of gas, containing 86 per cent of hydrogen. From the Augusta iron Mallet extracted 3.17 volumes, in which hydrogen, carbonic oxide, carbon dioxide, and nitrogen were present. There is, to be sure, one adverse experiment by M. W. Travers,[d] on meteoric iron of unstated origin, which is not quite conclusive. By heating this iron, hydrogen was obtained; upon dissolving the iron in copper-sulphate solution, none was evolved. The failure to develop hydrogen in the second experiment is held by Travers to prove its absence, at least as a gaseous occlusion. The possibility that hydrogen, from a metallic hydride, might be expended in the precipitation of copper, seems not to have been investigated. The weight of evidence, so far, is that meteoric irons do occlude hydrogen, while meteoric stones, according to Wright, yield chiefly carbon dioxide. The Kold Bokkeveld carbonaceous meteorite gave thirty times its volume of gas, in which carbon dioxide predominated. The terrestrial native iron from Ovifak, in Greenland, gives off when heated, according to Woehler,[e] more than one hundred times its volume of gas, which is mainly carbon monoxide with a little dioxide. If Chamberlin's theory of the

[a] See table given by A. C. Lane in his paper, Geological activity of the earth's originally absorbed gases; Bull. Geol. Soc. America, vol. 5, p. 264, 1893. See also references cited by G. Tschermak, Sitzungsb. Akad. Wien, vol. 75, pp. 170–174, 1877.

[b] See, for example, L. Troost and P. Hautefeuille, Compt. Rend., vol. 76, p. 562, 1873; L. Cailletet, idem, vol. 61, p. 850, 1865; and Thoma, Zeitschr. physikal. Chem., vol. 3, p. 91, 1891. Thoma's paper gives many references to literature. H. Wedding and T. Fischer (Ber. V. Internat. Kong. angew. Chemie, vol. 2, p. 25, 1904) have summed up the subject quite thoroughly. The papers by J. Parry (Am. Chemist, vol. 4, p. 225, 1873–74; vol. 6, p. 107, 1875–76) are also important.

[c] T. Graham, Proc. Roy. Soc., vol. 15, p. 502, 1866–67. J. W. Mallet, idem, vol. 20, p. 365, 1871–72. A. W. Wright, Am. Jour. Sci., 3d ser., vol. 9, p. 294, 1875; vol. 10, p. 44, 1875; vol. 11, p. 253, 1876; vol. 12, p. 166, 1876. J. Dewar and G. Ansdell, Proc. Roy. Inst., vol. 11, p. 445, 1886.

[d] Proc. Roy. Soc., vol. 64, p. 130, 1898–99.

[e] Ann. Chem. Pharm., vol. 163, p. 250, 1872. A similar observation by M. Berthelot is recorded by A. Daubrée, Compt. Rend., vol. 74, p. 1541, 1872.

earth's origin is correct, we have in these gases an adequate supply for the maintenance of all volcanic phenomena. Or, if the earth itself is equivalent to a huge meteorite, as many thinkers have supposed, the analogy between it and the smaller bodies accounts for all volcanic gases. From this point of view they are occlusions, forced out by pressure and the resulting mechanical heat. Between this supposition and that of Chamberlin there is little essential difference; at least upon the chemical side of the problem. The analogy between the expulsion of a gas from the interior of our globe and its evolution from meteorites has been well developed by G. Tschermak,[a] who regards volcanism as a cosmic phenomenon, of which the typical example is to be found in the terrific gaseous upheavals that are seen on the surface of the sun.

For each of the theories so far proposed relative to the origin of volcanic gases strong arguments can be adduced, and no one should be exclusively adopted. The phenomena are probably complex, and many activities contribute to their development. Some gas must be derived from reactions like those described by Travers and Gautier; some must originate from percolating waters, and a portion of the supply may possibly come from deep-seated sources. Whether we assume that the earth was once a molten globe or that it was formed by the accretion of meteoric masses, gases must be retained within its interior, and their escape from time to time would seem to be unavoidable. Molten matter, whether metallic or stony, is known to dissolve gases in large amounts, as silver dissolves oxygen,[b] and they are expelled in great measure during solidification. They are, moreover, expelled explosively, a fact which can be verified in any laboratory; but that the expulsion is complete is extremely improbable. Some gas, it may be much or little, is retained by the solid mass, and modifies its properties. All of these elements contribute to the phenomena of volcanism, but their relative magnitudes can not now be evaluated. Speculation upon them may help to stimulate research, but so long as the temperatures and pressures within a volcano are unmeasured the problems suggested by the hypotheses must remain unsolved. The question of volcanic temperatures, of which more will be said in the next chapter, is particularly important in the investigation of volcanic explosions. The latter are due in part to cooling and the violent expulsion of gases following relief of pressure, but chemical combination may also be manifest in them. If the temperature in the depths of a volcano is high enough to dissociate water into its

[a] Sitzungsb. Akad. Wien, vol. 75, p. 151, 1877.

[b] One volume of molten silver can absorb 22 volumes of oxygen, which escapes explosively when the metal cools. This "spitting" of melted silver is familiar to all assayers.

elements, then the issuing gases will form an explosive mixture of tremendous energy. The moment such a mixture reached the surface of the molten lava it would have become cool enough to ignite, and the characteristic detonations would follow. Hydrogen alone, emerging into the air, might form with the latter a similar mixture and produce the same phenomena. E. W. von Siemens,[a] observing a series of explosions at Vesuvius, ascribed them to this cause. That hydrogen does issue from volcanoes is established; under certain conditions it burns quietly, and under others it gives rise to explosions; but in either case it develops much heat and so retards the cooling of its surrounding matter. One gram of hydrogen, burning to form water, liberates a quantity of heat represented by 34,000 calories; that is, it would raise the temperature of 34,000 grams of water from 0° to 1° C. This reaction alone, this combustion of hydrogen in air, evidently plays a very large part in the thermodynamics of volcanism.

SUMMARY.

That the volcanic gases appear in a certain regular order has been shown by the various researches upon their composition, and especially by the labors of Deville and Leblanc. What, now, in the light of all the evidence, is that order, and what do the chemical changes mean?

First. The gases issue from an active crater at so high a temperature that they are practically dry. They contain superheated steam, hydrogen, carbon monoxide, methane, the vapor of metallic chlorides, and other substances of minor importance. Oxygen may be present in them, with some nitrogen, argon, sulphur vapor, and gaseous compounds of fluorine.

Second. The hydrogen burns to form more water vapor, and the carbon gases oxidize to carbon dioxide. From the sulphur, sulphur dioxide is produced. The steam reacts upon a part of the metallic chlorides, generates hydrochloric acid, and so acid fumaroles make their appearance.

Third. The acid gases of the second phase force their way through crevices in the lava and the adjacent rocks, and their acid contents are consumed in effecting various pneumatolytic reactions. The rocks are corroded, and where sulphides occur hydrogen sulphide is set free. If carbonate rocks are encountered, carbon dioxide is also liberated.

Fourth. Only steam with some carbon dioxide remains, and even the latter compound soon disappears.

---

[a] Monatsber. K. preuss. Akad., 1878, p. 558.

This seems to be the general course of events, although it is modified in details by local peculiarities. All of the substances enumerated in the lists of gases and sublimates given in the earlier portions of this chapter may take part in the reactions, but they do not seriously affect the larger processes which have just been described. The order is essentially that laid down by Deville and Leblanc, except that the early evolution of hydrogen and carbonic oxide is taken into account. The current of events may be disturbed, so to speak, by ripples and eddies—that is, by subsidiary and reversed reactions—but its main course seems to be clearly indicated.[a]

[a] For a recent summary of our knowledge concerning the magmatic gases, see F. C. Lincoln, Econ. Geol., vol. 2, p. 258, 1907.

CHAPTER IX.

THE MOLTEN MAGMA.

TEMPERATURE.

In the chapter upon volcanic gases the question of temperatures was purposely left vague, and only the bare fact that they must be high was taken into account. For an intelligent study of the magmas, however, some more definite estimates of temperatures are essential, even though their inferior limits can alone be determined with any degree of certainty. We can measure the temperature at which lavas and their component minerals fuse, under ordinary conditions of pressure; but these melting points are modified by various agencies within the depths of the earth, and it is not yet possible to strike a definite balance between the opposing forces. By pressure, which steadily increases as we descend into the earth, the melting points must be raised,[a] but on the other hand the water that we know to be present in the molten mass tends to lower them, and the latter tendency is probably the stronger. The fact that pressure tends to prevent the escape of dissolved vapors, and so to increase fluidity, must also be taken into account. It should be remembered, moreover, in any reasoning upon the unerupted magma, that the temperature at which it can retain the liquid state is a minimum, and that actually it may be very much hotter. The temperature, furthermore, is believed to increase with the depth; but we can do no more than to surmise what the conditions may be miles below the apparent surface of the lava column.[b] Although the characteristics of the individual rock-forming minerals will not be generally discussed until the next chapter is reached, our knowledge of their melting points may properly be summed up here. It is only within recent years that anything like accurate measurements of high temperatures have been possible, and therefore the few and scattered older data can be ignored.[c] The development of the thermo-couple by C. Barus in

[a] Estimates of the change in fusibility due to pressure have been made by Lord Kelvin, Phil. Mag., 5th ser., vol. 47, p. 66; and C. E. Stromeyer, Mem. Manchester Lit. Phil. Soc., vol. 44, No. 7, 1900. The fundamental data, however, are few and unsatisfactory.

[b] For estimates of temperatures far within the earth, see Clarence King, Am. Jour. Sci., 3d ser., vol. 45, p. 7, 1893; O. Fisher, idem, 4th ser., vol. 11, p. 414, 1901; F. R. Moulton, cited by T. C. Chamberlin, Jour. Geol., vol. 5, p. 674, 1897; and A. C. Lunn, in Chamberlin and Salisbury's Geology, vol. 1, p. 552, 1904. All the estimates reach exceedingly high figures.

[c] See, for example, A. Schertel and T. Erhard, Beiblätter, 1879, p. 347; and Schertel, idem, 1880, p. 542.

the United States Geological Survey, and by H. Le Chatelier in France, and the use of the Seger cones in the ceramic industry, have placed high-temperature pyrometry upon a new footing and have made practicable the class of determinations which we now require.

In 1891 J. Joly[a] described an instrument (the meldometer) by means of which the melting points of minerals could be rapidly and easily determined, and several years later R. Cusack[b] reported a considerable number of measurements made with its aid. The instrument consisted of a thin ribbon of platinum, upon which the mineral to be examined, in very fine powder, was placed. The particles of mineral dust were observed with a microscope; the ribbon was heated with an electric current; and from the expansion of the platinum, which was measurable, the temperature was ascertained. For the method by which the meldometer was calibrated the original memoir may be consulted.

C. Doelter,[c] in recent years, has made many melting point determinations by means of a thermoelectric couple. In his earlier work the minerals were fused in a gas furnace; later an electric furnace was employed.

The determinations by A. Brun[d] were published in 1902 and 1904. His fusions were effected in a muffle furnace, heated by a mixture of oxygen and illuminating gas, and the temperatures were measured by comparison with Seger cones. The crystallized mineral was mounted on a slender peduncle of platinum, and so placed that it was heated by radiation from the walls of the muffle out of contact with the flame.

In all of the determinations represented by the foregoing investigations the subjective element has been large. The tested samples were watched and the human eye was trusted to determine when softening began and when fusion was complete. Greater exactness has been secured in the researches conducted by A. L. Day and his colleagues[e] in the geophysical laboratories of the United States Geological Survey and the Carnegie Institution upon almost ideally pure

---

[a] Proc. Roy. Irish Acad., 3d ser., vol. 2, p. 38, 1891.

[b] Idem, vol. 4, p. 399, 1896.

[c] Min. pet. Mitth., vol. 20, p. 211, 1901; vol. 21, p. 23, 1902; vol. 23, p. 297, 1903; Sitzungsb. Akad. Wien, vol. 114, p. 529, 1905; vol. 115, abth. 1, July, 1906. The determinations cited are from his third paper.

[d] Arch. sci. phys. nat., 4th ser., vol. 13, p. 552, 1902; vol. 18, p. 537, 1904. There are also some determinations by W. C. Roberts-Austen, cited by Lord Kelvin, Phil. Mag., 5th ser., vol. 47, p. 66, 1899; others by J. H. L. Vogt, published in part 2 of his Die Silikatschmelzlösungen, and a few by W. Hempel, Ber. V. Internat. Kong. angew. Chemie, vol. 1, p. 725, 1904. For data on shales and clays, see W. C. Heraeus, Zeitschr. angew. Chemie, 1905, p. 49.

[e] A. L. Day and E. T. Allen, Am. Jour. Sci., 4th ser., vol. 19, p. 93, 1905, on the feldspars. E. T. Allen and W. P. White, idem, vol. 21, p. 100, 1906, on wollastonite. A. L. Day and E. S. Shepherd, idem, vol. 22, p. 265, 1906, on the lime-silica series. E. T. Allen, F. E. Wright, and J. K. Clement, idem, vol. 22, p. 385, 1906, on magnesium metasilicate.

artificial minerals, and with thermoelectric couples which had been calibrated by comparison with the standards at the Physikalische Reichsanstalt at Berlin. In these measurements the melting points were determined by noting the exact temperatures at which abrupt absorptions of heat occurred, and in that way errors of judgment were avoided.

From the great mass of data now available I have compiled the following table, which well exhibits the great divergence between the older and the newest determinations. The table might be greatly extended, but so many of the published figures relate to unanalyzed minerals that their value is problematical.

Melting points (°C.) of various minerals, as determined by different investigators.

FELDSPARS AND FELDSPATHOIDS.

Mineral.	Joly.	Cusack.	Doelter.	Brun.	Day et al.
Anorthite, natural			1,165–1,210	1,490–1,520	
Anorthite, artificial				1,544–1,562	1,532
An_5Ab_1, artificial					1,500
An_2Ab_1, artificial					1,463
Labradorite	1,230	1,223–1,235	1,040–1,210	1,370	
Andesine			1,155–1,185	1,280	
An_1Ab_1, artificial					1,419
An_1Ab_2, artificial					1,367
An_1Ab_3, artificial					[a] 1,340
Oligoclase	1,220		1,135–1,185	1,260	
Albite	1,175	1,172	1,115–1,170	1,259	
Orthoclase			1,185–1,220		
Leucite		1,298	1,275–1,315	1,410–1,430	
Nepheline		1,059–1,070	1,105–1,125	1,270	

[a] Approximate. Viscosity prevents exact measurements.

MISCELLANEOUS MINERALS.

Mineral.	Cusack.	Doelter.	Brun.	Day et al.
Enstatite		1,375–1,400		
$MgSiO_3$, artificial				1,521
Wollastonite [a]	1,203–1,208	1,230–1,255	1,366	
$CaSiO_3$, artificial			1,515	1,512
Diopside, natural	1,187–1,195	1,135–1,265	1,270	
Diopside, artificial				[b] 1,375
Augite	1,187–1,199	1,085–1,200	1,230	
Tremolite	1,219–1,223	1,200–1,220	1,270	
Hornblende	1,187–1,200	1,065–1,155	1,060–1,070	
Olivine	1,342–1,378	1,265–1,410	1,750	
Quartz [c]	1,425		1,780	1,600
Magnetite		1,190–1,225		
Hematite		1,350–1,400	1,300	
Fluorite			1,270	[d] 1,387

[a] Wollastonite has no true melting point. At 1,180° it passes into the pseudohexagonal form, which melts at 1,512°.

[b] Hitherto unpublished measurement by Allen and White. A much lower value, 1,225°, was given by Vogt.

[c] More properly silica. Quartz is transformed into tridymite at about 800°, and has no true melting point of its own. Roberts-Austen gives the melting point of silica as 1,775° and Hempel as 1,685°. Alumina (corundum ?) melts, according to Hempel, at 1,880°, magnesia at 2,250°, and lime at 1,900°. O. Boudouard (Jour. Iron and Steel Inst., 1905, pt. 1, p. 350) puts the melting point of silica at 1,830°. Other recent papers on the melting points of quartz and silicates are by J. A. Douglas, Quart. Jour. Geol. Soc., vol. 63, p. 145, 1907; and G. Stein, Zeitschr. anorg. Chemie, vol. 55, p. 160, 1907.

[d] Hitherto unpublished determination by A. L. Day on the natural mineral.

Many of the published melting points have no real significance. Some of the minerals for which melting points have been recorded break down into other substances before or during fusion, a fact of which Brun has taken notice in a number of instances. The micas, for example, for which Doelter gives several determinations, lose water and are transformed into other silicates or mixtures of silicates, whose precise character is unknown. Garnet, when fused, also splits up into two or more compounds, and in such cases the recorded melting points are meaningless.

In his second paper Brun gives the melting point of artificial anorthite, as determined by a calorimetric method, at from 1,544° to 1,562°. Japanese anorthite fused at 1,490°, albite at 1,259°, olivine at about 1,750°, wollastonite at 1,366°, and the hexagonal calcium metasilicate at 1,515°. In the glassy state the artificial anorthite begins to show deformation at 1,083° to 1,110°, and it crystallizes between 1,210° and 1,250°. The albite glass softens at 1,177°. These lower temperatures accord fairly with those determined by Cusack and Doelter, who seem to have observed them rather than the true melting points. Other discordances are due to differences between the substances examined, for natural minerals are rarely pure, and in the pyroxene-hornblende-olivine series the variations due to isomorphism are very large. One augite, for example, contains much, another little, iron; calcium and magnesium also vary in their proportions, and so on. In these series, generally speaking, the melting point falls as the percentage of iron increases. The presence of water in a mineral has also a lowering effect upon the melting point, and this impurity is not often entirely absent. The figures given, therefore, do not, except in those from the geophysical laboratory and in one or two other cases, refer to ideally pure compounds, but to the natural minerals with all their defects of composition. They help us to form some idea of the temperatures which govern volcanic phenomena, but we can not reason upon them as if they were precise and definite. They also furnish us with some checks that we can use in studying the order of formation of minerals when a molten lava cools, although here again the data should be handled with great caution. A comparison of the different figures for the melting point of the same mineral, say for leucite or olivine, will show how great the existing uncertainties really are.

In the geological interpretation of the melting points there is one particularly dangerous source of error. We must not assume that the temperature at which a given oxide or silicate melts is the temperature at which a mineral of the same composition can crystallize from a magma. Many substances exist in more than one modifica-

tion, and certain forms, which often correspond to natural minerals, are developed only at temperatures far below the apparent points of fusion. Quartz, for example, ceases to be quartz and becomes tridymite long before it fuses; wollastonite is transformed into a pseudohexagonal substance which is unknown as a mineral species, and the melting point of magnesium metasilicate, under ordinary conditions, is not that of the orthorhombic enstatite, but of a monoclinic variety. In these instances, which will be taken up in detail in the next chapter, the transition temperatures, at which one form changes to another, are geologically as important as the melting points, and perhaps of even greater value. They are the temperatures above which the several species can not form, and therefore they are of the utmost significance. Silica crystallizes as quartz only below 1,000°; wollastonite can not exist above 1,180°; and so the formation of either mineral in a rock tells us something of the conditions under which it solidified. As yet the data of this class are unfortunately few, but their number is likely to become much greater within the near future.

For the direct study of the igneous rocks themselves, the available melting-point measurements are very few. Mixtures, such as rocks, unless they happen to be eutectic, have no distinct melting points, and two temperatures at least should be determined for each example. The following temperatures, observed by Doelter,[a] will serve to illustrate this point:

Melting points (°C.) of various igneous rocks.

Rock.	Softens.	Becomes fluid.
Granite, Predazzo	1,150–1,160	1,240
Monzonite, Predazzo	1,115–1,125	1,190
Lava, Vesuvius	1,030–1,060	1,080–1,090
Lava, Etna	962–970	1,010–1,040
Basalt, Remagen	992–1,020	1,060–1,075
Limburgite	995–1,000	1,050–1,060
Phonolite	1,060	1,090
Nepheline syenite	1,040–1,060	1,060–1,100

According to A. Brun,[b] the basalt from Stromboli begins to soften at 1,130°, and at 1,170° it becomes pasty. The still molten rock contains crystals of augite, whose melting point he places at 1,230°. The temperature at which the basalt solidified, therefore, can not exceed that figure, and may have been much lower. Similar reasoning has been employed by C. Doelter,[c] based upon the presence of leucite in Vesuvian lava. Doelter, however, assigned to leucite a melting point

[a] Min. pet. Mitth., vol. 21, p. 23, 1902.
[b] Arch. sci. phys. nat., 4th ser., vol. 13, p. 367, 1902.
[c] Sitzungsb. Akad. Wien, vol. 112, p. 681, 1903.

which is certainly too low,[a] and his computations, which must be revised, need not be considered further. All we can now say with certainty is that the temperature of an emerging lava must be above that at which it begins to solidify. That temperature is rarely, if ever, below 1,000° C., and the actual temperature not long before emission may be hundreds, perhaps a thousand, degrees higher. Lava at Torre del Greco, says A. Geikie,[b] fused the sharp edges of flints and decomposed brass, the copper actually crystallizing. From its effect on flint, it would seem that its temperature could hardly be below 1,600°, at which point silica softens. If, however, the apparent fusion was due to a solvent action of the molten lava, the argument in favor of a high temperature breaks down.

INFLUENCE OF WATER.

So far the measurements cited in this chapter relate to dry fusion or to the fusion of minerals containing only insignificant quantities of hygroscopic water. Within a volcano, apparently, the conditions are quite different, and there the presence of water must be taken into account, together with the gases which are so powerfully operative in producing explosions. The magma, before eruption, is something very different from the smoothly flowing stream of lava, for it is heavily charged with aqueous vapor and other gases, under great pressure, exactly as the soda water in an ordinary siphon bottle is loaded with carbon dioxide. When the pressure is released the gases escape with explosive force, carrying the liquid matter with them.[c] In the eruption of a volcano this process produces a great quantity of fiery spray, which solidifies in the form of volcanic ash, while other portions of the foaming surface of the lava cool to pumice. When the lava stream itself appears its effervescence has largely ceased, and it exhibits the ordinary phenomena of a cooling liquid.

The condition of the water which is contained within a magma is perhaps best explained by certain experiments of C. Barus,[d] who found that colloid substances, in presence of solvents, swell up enormously, and that at high temperatures the swollen coagulum passes

[a] See preceding table of melting points (p. 240). Preliminary experiments by A. L. Day have shown that the melting point of leucite is certainly above 1,500°.

[b] Text-book of Geology, 4th ed., p. 304.

[c] This comparison of a volcano with a bottle of soda water or champagne has been developed by S. Meunier. He assumes that the water was originally occluded or combined in the rocks, and when the latter, by displacement, are brought into the region of high temperature, their aqueous content is set free and an explosion becomes possible. See La Nature, vol. 30, pt. 1, p. 386, 1902.

[d] Am. Jour. Sci., 4th ser., vol. 9, p. 161, 1900. The name "water glass," as used by Barus, is unfortunate, for it already belonged to the soluble alkaline silicates and had been in current use for many years.

into a clear and apparently homogeneous solution. This observation he extended to mixtures of ordinary soft glass and water, which he heated in closed steel tubes to 210° C. Under these conditions 210 grams of glass with 50 grams of water formed a resinous opalescent mass, in which all the water was absorbed. This substance, to which Barus gave the name of "water glass," when heated in air, swells up enormously, loses water, and forms a true pumice. By ordinary exposure to air the substance slowly disintegrates. Salts dissolved in the water do not enter the glass, which acts in that respect like a semipermeable membrane. Hard glasses are more refractory; but it is probable that at the temperatures and pressures existing within a volcano, all of the silicates would act in a similar way and give similar solutions. This may enable us to form some notion of the unerupted magma, with its dissolved gases, and the changes which it undergoes when the pressure upon it is relieved. One effect of the water would be to reduce the temperature at which liquidity could be maintained. An obsidian, in presence of water, was found by Barus to fuse at about 1,250°, while the resulting pumice melted at 1,650°, approximately.[a]

MAGMATIC SOLUTIONS.

So far as we can determine, then, the magma, previous to eruption, is a mass of rock-forming matter, in a state of fusion, and heavily charged with gases under enormous pressure. To what extent and how its temperature may vary we do not know, but the pressure must fluctuate widely. It is through overcoming pressure that eruptions become possible. Then gases and water are largely expelled, and a fluid or viscous lava, very different from the original magma, remains. By pressure, furthermore, the temperature needed to produce complete fluidity is raised, and this fact is emphasized by the phenomena of resorption. A mineral—like quartz, for example—may crystallize within a viscous magma, but when the pressure is reduced its temperature of fusion falls, and partial or complete re-solution may take place. These partly redissolved minerals are familiar objects to the petrologist.

Whether the magma itself, at great depths, is homogeneous or not is an open question, but it is not emitted homogeneously. Different lavas issue, not only from neighboring vents, but successively from the same opening during a series of eruptions. To determine the cause of these differences is one of the great problems of petrology, and many solutions of it have been proposed, discussed, and either abandoned or partly accepted. To discuss these attempts in detail does not fall within the scope of this memoir, but the evidence upon

[a] *Compare* F. Guthrie, Phil. Mag., 5th ser., vol. 18, p. 117, 1884, on the change from *obsidian to pumice* by extrusion of water.

which they rest, so far as it touches chemistry, must be briefly considered.[a]

From a physico-chemical point of view, a molten rock is to be regarded as a solution, behaving in all essential particulars exactly like any other solution. One or more minerals are dissolved in another, as salt dissolves in water; or, better, they are mutually dissolved, like a mixture of water and alcohol. We can not really say that in such a mixture one substance is the solvent and the others are the solutes, for the distinction is not a sound one, however convenient it may be in ordinary cases.[b] The different molten substances dissolve one another, and if there are any limits to their miscibility, they have not been determined. I speak now, of course, with reference to the constituents of an ordinary fluid lava, and these are mostly silicates—that is, metallic salts.

The more familiar aqueous solutions of salts are electrolytes, and in them the compounds are believed to be dissociated into their ions. This dissociation is complete only at infinite dilution; in concentrated solutions it is partial, and in a saturated solution its amount may be comparatively small. In a molten magma probably all of these conditions hold, for as a solution it is dilute with respect to its minor components, but highly concentrated as regards the more essential minerals. As a solution of apatite or rutile it may be very weak; as a solution of quartz, feldspar, or pyroxene, very strong. It is, however, a conductor of electricity, and, therefore, if the analogy between it and ordinary solutions is valid, it is at least partially ionized. This is the view adopted by C. Barus and J. P. Iddings,[c] who studied the electrical conductivity of three molten rocks, for which the following condensed descriptions may be cited here:

Melting points and silica content of three igneous rocks.

Rock.	Approximate melting point.	Percentage of SiO_2.
Basalt	1,250	48.49
Hornblende-mica porphyry	1,400	61.50
Rhyolite	1,500	75.50

[a] For good summaries on magmatic differentiation, see J. P. Iddings, The origin of igneous rocks: Bull. Phil. Soc. Washington, vol. 12, p. 89, 1892; W. C. Brögger, Die Eruptivgesteine des Kristianiagebietes, pt. 3, p. 334, 1898; and F. Loewinson-Lessing, Compt. Rend. VII Cong. géol. internat., p. 308, 1897. These are only a few among many memoirs dealing more or less fully with the subject. Loewinson-Lessing's paper is rich in literature references. For a criticism adverse to the idea of magmatic differentiation see F. Fouqué, Bull. Soc. Min., vol. 25, p. 349, 1902.

[b] G. F. Becker (Twenty-first Ann. Rept. U. S. Geol. Survey, pt. 3, p. 519, 1901) proposes to regard the eutectic mixtures as the true solvents, and the minerals which separate from them as the solutes. This suggestion deserves careful consideration, although it can not be fully utilized until we know what the eutectics really are.

[c] Am. Jour. Sci., 3d ser., vol. 44, p. 242, 1892.

At 1,300° the basalt was quite fluid, but at 1,700° the rhyolite was still viscid, and yet the conductivity increased with the viscosity and with the silica, in spite of the fact that silica alone is probably an insulator. In other words, the fused rocks are electrolytes, and the silicates in them are probably more or less dissociated into their ions.[a] What these ions are we do not yet know; but their ultimate identification is not hopeless. The extent of the ionization is also unknown, but its existence seems to be established. Furthermore, since the several silicates are present in a magma in different degrees of concentration, they must be differently ionized, and some of them to a much greater extent than others.

When a salt dissolves in water the temperature of solidification is changed. Water, for example, freezes at 0° C., but the addition of 23.6 per cent of sodium chloride to it reduces the melting or solidifying point to −22°. This depression of the melting point is quite a general phenomenon, and from it, by formulæ which need not be considered here, the molecular weight of the dissolved substance can be calculated. In alloys a similar change can be observed, and in some cases it is very striking; the well-known fusible alloys, for instance, melt at temperatures below the boiling point of water.

An igneous rock, so far as our data now go, exhibits the same peculiarity, and becomes fluid at temperatures below the average melting point of its constituent minerals, and sometimes lower than the lowest among the latter. Doelter's figures, as cited on page 242, serve to illustrate this point, although the depression is not so marked as in the more familiar cases just mentioned. The experiments by Michaela Vučnik[b] and Berta Vukits,[c] who fused together minerals of supposedly known melting points and observed those of the mixtures, tell the same story. In some cases, however, the interpretation of the observations is complicated by chemical reactions, which produced new salts; and it is also affected by the liability of glasses to supercooling. Attempts to compute molecular weights from the observed depressions gave unsatisfactory results, and led to no definite conclusions.

N. V. Kultascheff's investigations,[d] although not rigorously comparable with natural phenomena, point in the same direction. Mixtures of Na_2SiO_3 and $CaSiO_3$ were studied, the first salt melting at

[a] The coexistence in certain rocks of antagonistic minerals like quartz and magnetite may be an evidence of dissociation. They should react to form a silicate of iron, but we can readily imagine a highly viscous melt as solidifying so rapidly that all of the ions are unable to find their proper partners. The free oxides therefore appear in the solid product. I offer this merely as a suggestion. Doelter (Sitzungsb. Akad. Wien, vol. 113, p. 169, 1904) ascribes the early separation of oxides and aluminates from cooling magmas to dissociation.

[b] Centralbl. Min. Geol. Pal., 1904, pp. 295, 340, 364.

[c] Idem, pp. 705, 739.

[d] Zeitschr. anorg. Chemie, vol. 35, p. 187, 1903.

1,007° and the second at a temperature above 1,400°.[a] A mixture of 80 per cent of the sodium salt with 20 per cent of the calcium compound fused at 938°, and even greater depressions were produced by additions of the still less fusible silica. Upon adding only 6.5 per cent of silica to the sodium silicate, the melting point was reduced to 820°. It was also found that the two silicates united to form at least two double salts, a fact which complicates the interpretation of the phenomena.

EUTECTICS.

When a fused rock, or mixture of similar character, solidifies, it can do so in either one of two ways. It may solidify as a unit, forming a glass, in which no individualization of its constituents can be detected, or it may solidify as a mass of crystalline minerals, each one exhibiting its own peculiarities. Between these extremes many intermediate conditions are possible, due to partial crystallization and ranging from glass containing a few crystals to a crystalline mass with some glassy remainder left over—that is, both processes may go on in the same cooling magma, and both, of course, incompletely. The more viscous the lava the less easily its materials can crystallize, and hence glasses are most commonly derived from magmas rich in silica. Obsidian has essentially the composition of rhyolite.

Let us now consider what will happen when a solution solidifies to a crystalline aggregate. Take for example a solution of common salt in water, which freezes at —22° C. with a definite proportion—namely, 23.6 per cent—of sodium chloride in the mixture. Upon cooling such a solution, if less than that proportion of salt is present, ice will crystallize first, but when the indicated concentration and temperature have been reached the entire mass—salt and water—will solidify. If, on the other hand, salt is in excess of 23.6 per cent, its hydrate, $NaCl.2H_2O$, will first appear and continue to be deposited until the point of equilibrium has been attained. Then the same mixture will solidify as in the other case. This minimum temperature, with its definite, corresponding concentration of salt and water, is known as the eutectic point, and at that point the solution and the solid have the same composition.[b] Above the eutectic point either salt or water may crystallize out, that substance being first deposited which is in excess of the eutectic ratio—the ratio, that is, of 23.6 NaCl to 76.4 H_2O. In the freezing of sea water the separation of nearly pure ice is seen, because the water is largely in excess of the eutectic proportions.

---

[a] 1,512° according to Allen and White. See table of melting points (p. 240).

[b] F. Guthrie regarded these saline mixtures with water as definite compounds, which he termed cryohydrates. See Phil. Mag., 4th ser., vol. 49, pp. 1, 206, 266, 1875; 5th ser., vol. 17, p. 462, 1884. See also M. Roloff, Zeitschr. physikal. Chemie, vol. 17, p. 325, 1895.

When two salts are fused together and allowed to solidify, the same order of phenomena appears, provided that certain conditions are satisfied. First, the fused salts must be miscible—that is, soluble in one another. If this condition is not fulfilled the melt will separate into layers. Secondly, they must not be capable of acting upon each other chemically, for in that case new compounds are produced. Finally, they should not be isomorphous salts, for then no eutectic mixture is possible. The feldspars albite and anorthite, for example, crystallize together in all proportions, and the melting points of the mixed crystals form a series with no eutectic depression. This difference between isomorphous and eutectic mixtures is fundamental.

Since, now, the fusing point of a lava generally falls below the average melting point of its constituent minerals, the foregoing considerations may be applied to its investigation. Some of its components will form isomorphous mixtures, but a part of it will represent eutectic proportions which differ with the varying composition of different rocks. In each case the substances that are in excess of the eutectic ratios are likely to crystallize first, and the eutectic mixture itself will probably be found in the groundmass, or solidified mother liquor, from which the crystals have separated. From this point of view the study of the eutectics becomes fundamentally important in the study and classification of igneous rocks, for they chiefly determine the character and order of deposition of the phenocrysts. There are doubtless other factors in the problem, but this one is the most fundamental and characteristic. So far none of the eutectics in question have been positively identified, although various attempts to indicate them are on record, with results which may or may not be verified. In Kultascheff's experiments with sodium and calcium silicates two eutectic points were noted, which represented, however, not a single natural mixture, but a series of artificial mixtures wherein both of the original compounds and two double salts took part. H. O. Hofman's work [a] on artificial slags, containing iron and calcium silicates, also tells us something about possible eutectic points, and other valuable data are given in the memoir by A. L. Day and E. S. Shepherd [b] on the compounds of lime and silica. The mixtures studied in the latter investigation, however, do not correspond to any known natural associations.

F. Guthrie,[c] to whom the expression "eutectic" is due, was the first to point out the applicability of his researches to the study of igneous rocks, and of late years his suggestions have received much attention. J. J. H. Teall [d] was one of the first to develop the subject, and he

[a] Technology Quart., vol. 13, p. 41, 1900.
[b] Am. Jour. Sci., 4th ser., vol. 22, p. 265, 1906.
[c] Phil. Mag., 4th ser., vol. 49, p. 20, 1875.
[d] British Petrography, pp. 395–419, 1888.

indicated a micropegmatite, with 62.05 per cent of feldspar and 37.95 per cent of quartz, as a possible eutectic mixture. This possibility has been discussed by several writers, and especially by J. H. L. Vogt,[a] who regards a mixture of 74.25 per cent of orthoclase with 25.75 per cent of quartz as the true eutectic in this particular instance, and shows that it is very close to the average micropegmatite in composition. This is not far from the molecular ratio $3AlKSi_3O_8 : 5SiO_2$, although simple molecular ratios can not necessarily be assumed in eutectic mixtures. The latter, so far as present evidence goes, are not definite compounds. The water-salt eutectic is not a hydrate, but a mixture of salt and ice, which, however, happens to approximate rather closely in composition to $NaCl+10H_2O$.

In the first of the memoirs just cited, which is rich in data relative to the physical constants of molten rocks, minerals, and slags, Vogt attempts to fix the composition of a number of eutectic mixtures. Some of them are as follows, the figures referring to percentages:

68	diopside with 32 olivine.
74	melilite with 26 olivine.
65	melilite with 35 anorthite.
40	diopside with 60 åkermanite.
74.25	anorthite with 25.75 quartz.
75	albite with 25 quartz.

The last two ratios are practically identical with the orthoclase-quartz ratio as given above. The entire subject of eutectics, in reference to rock formation, is elaborately discussed by Vogt, who considers them in connection with the melting points, and the specific and latent heats of the component minerals. These data, however, are more or less crude, and Vogt's results are therefore to be regarded merely as first approximations to the solution of the problems proposed, and as subject to very critical revision. Vogt also seeks to compute the molecular weights of several silicates from the observed melting-point depressions, and concludes that they are neither polymerized nor considerably disassociated. Their simple, empirical formulæ, according to Vogt, represent their true molecular weights, and the fused minerals, as such, exist in the fluid magmas. The essential point in Vogt's work is that he attempts to apply modern physicochemical methods to the investigation of magmas, and whether his conclusions are maintained or not they are at least suggestive.

Up to this point we have considered only simple cases to which the theory of eutectics is easily applied. In salt and water we have merely a system of two components, and the examples given by Vogt

[a] Die Silikatschmelzlösungen, pt. 2, pp. 113–128, 1904. See also Vogt, Min. pet. Mitth., vol. 24, p. 437, 1906; vol. 25, p. 361, 1906; A. C. Lane, Jour. Geol., vol. 12, p. 83, 1904; H. E. Johansson, Geol. Fören. Förhandl., vol. 27, p. 119, 1905; and A. Bygdén, Bull. Geol. Inst. Upsala, vol. 7, p. 1, 1904–5.

are of like simplicity. But igneous rocks are, as a rule, much more complex, and may contain from three to many component minerals. For conditions like these the theoretical treatment is as yet undeveloped, although the researches of Van't Hoff on the Stassfurt salts suggest, with their diagrams, certain analogies which may be followed in the future. The laws of equilibrium must apply to all possible cases of solution, even though we may be unable as yet to trace the details of their working. Just as the Stassfurt problem is complicated by the deposition of hydrates and double salts, so from the magma complex silicates can form, and the exact conditions under which each may develop are so far only partially determined. The difficulties that confront us here are well pointed out by Roozeboom [a] in his great work on the phase rule, where he calls attention to the fact that an igneous rock represents many components and many solid phases. Some of the latter are definite compounds, and some are mixed crystals from isomorphous series. If the cooling of the magma has been too rapid, supersaturation may have occurred, with a change in the order of deposition of the minerals and the formation of some undifferentiated glass base. Furthermore, lava rising from a great depth undergoes a change of pressure, which modifies the relative solubility of its components and alters the position of the eutectic point.

SEPARATION OF MINERALS.

It is evident, from what has been said, that no universal concrete rule can be laid down to determine the order in which the different minerals will separate from a cooling magma. The broad, general principles are clear enough, but their application to the problem under consideration is an affair of the future. For the present, therefore, we must depend upon accurate observations and experiments, and in that way accumulate data for theory to work upon. The much-cited phase rule, with its diagrams, gives us a mathematical method of dealing with our facts, but it is inoperative without them. When accurate numerical data have been obtained, then the rule will become applicable to the relatively simpler cases; but anything more complex than a four-component system is likely to be unmanageable. At present, however, we can see some of the conditions which are involved in the general problem. First, the entire composition of the magma must be taken into account, together with the pressure under which it solidifies. An ordinary lava,

[a] H. W. Bakhuis Roozeboom, Die heterogenen Gleichgewichte vom Standpunkte der Phasenlehre, vol 2, pp. 240 et seq., Braunschweig, 1904. For a simple application of a phase-rule diagram to a system of two components, see W. Meyerhoffer, Zeitschr. Kryst. Min., vol. 36, p. 592, 1902. T. T. Read (Econ. Geol. vol. 1, p. 101, 1905) has discussed the application of the phase rule to the study of magmas, but his suggestions have been criticized by A. L. Day and E. S. Shepherd (idem, p. 286). C. Doelter (Min. pet. Mitth., *vol. 25, p. 79, 1907*) has studied what he calls the "stability fields" of certain minerals.

cooling on the surface of the earth, will behave very differently from similar material which solidifies at a great depth to form a laccolith or batholith. In the latter case its gaseous contents are not so completely lost, and they, especially the water vapor, play an important part in determining the order of mineral deposition. The retention, under pressure, of boric acid and fluorine will cause the formation of compounds which do not appear in surface eruptions, and such minerals as tourmaline and the micas become possible. At the surface quartz is likely to separate early from the magma; in a deep-seated granite it may be the last mineral to appear. There again we touch the question of aqueo-igneous fusion, which can be effected only under pressure.

If in any given case we regard the eutectic mixture as the solvent, the minerals that are in excess of its ratios will be the first to crystallize. Their order of deposition will then depend upon three essential conditions—namely, their relative abundance,[a] their solubility in the eutectic, and their points of fusion. Other things being equal, the less soluble and less fusible substances will be formed earliest. With an excess of alumina, corundum and spinel may form, and as a general rule the so-called accessory minerals, the more trivial constituents of a rock, are among the first separations. Apatite, sulphides, and the titanium minerals belong in this class. Although the sulphides are more easily fusible than the silicates, their insolubility in a silicate magma causes their early precipitation. According to J. H. L. Vogt,[b] the sulphides are much more soluble in very hot magmas than they are at lower temperatures, and this order of difference is one which should be taken into account. Solubility varies with temperature, and differently with different substances. It also varies with the solvent, and J. Morozewicz[c] has shown that alumosilicates rich in soda dissolve alumina much more freely than the corresponding potash compounds, in which it is little soluble, if at all. So also the sulphides, as Vogt has pointed out, are more soluble in femic magmas than in the salic varieties. They are consequently more abundant in basalts and diabases than they are in quartz porphyry or rhyolite. We have here, apparently, a case of limited miscibility between fused sulphides and fused silicates, while on the other hand the silicates themselves seem to be miscible in all proportions. At least, in the latter case, no limitation has been observed, except in so far as chemical reactivity renders the mutual

[a] F. Loewinson-Lessing (Compt. Rend. VII Cong. géol. internat., pp. 352–353, 1897) has called attention to the fact that relative abundance is fundamentally important, that is, silica will divide itself among the several bases in accordance with the law of mass action; or, in other words, that law will determine what silicates can form. Its detailed application, however, is perhaps not practicable.

[b] Die Silikatschmelzlösungen, pt. 1, pp. 96–101, 1903.

[c] Min. pet. Mitth., vol. 18, pp. 56, 57, 1888–89.

presence of certain species impossible. In an actual magma these incompatibilities do not exist, nor do they become evident when we fuse together several oxides to form an artificial melt. When, however, we fuse mixtures of minerals, as in the researches of J. Lenarčič,[a] M. Vučnik,[b] and B. Vukits,[c] the limitations of this class become evident. For instance, when magnetite is fused with labradorite, it is absorbed, and upon cooling the melt, augite crystals appear. With magnetite and anorthite, hercynite may be formed; leucite and acmite give magnetite, leucite, and glass; and so on. Again, leucite and nephelite are incompatible with quartz, which converts them into feldspars; and a multitude of such conditions help to determine what compounds shall crystallize from any given magma. In a magma of defined composition certain compounds are capable of existence, others are not; and these limitations are imperative. In the next chapter, upon rock-forming minerals, they will be considered more in detail.

In ordinary solutions, two substances having an ion in common diminish the solubility of each other. How far this rule may apply to magmas is uncertain, and especially so because of our ignorance as to what the ions actually are. Still we may assume that olivine, Mg_2SiO_4, and enstatite, $MgSiO_3$, have magnesium ions in common, and with them the rule ought to work. Each should be less soluble in presence of the other than it is when present alone, and the same condition ought to hold for the two potassium salts leucite and orthoclase, or the sodium couple albite and nepheline. With mixtures of several possible silicates the rule is more difficult to apply, for then complex ions are likely to form. For instance, in a magma capable of yielding olivine, enstatite, albite, and anorthite, the ions may be Mg, Ca, Na, SiO_3, SiO_4, $AlSiO_4$, and $AlSi_3O_8$. Even in such a case, which is purely hypothetical, two of the supposed minerals have an ion in common, and olivine and enstatite should be the first to separate. Here we have a suggestion of what really happens in a vast number of cases, possibly in a large majority of cooling magmas. The order in which the minerals are deposited is essentially that laid down by H. Rosenbusch,[d] namely, ores and oxides first, then the ferromagnesian minerals, then the feldspars, and finally, if an excess of silica is

[a] Centralbl. Min. Geol. Pal., 1903, pp. 705, 743.

[b] Idem, 1904, pp. 295, 340, 364, 1906, p. 132.

[c] Idem, 1904, pp. 705, 739. See also memoirs by B. K. Schmutz, Neues Jahrb., 1897, pt. 2, p. 124; K. Bauer, idem, Beil. Bd. 12, p. 535, 1899; K. Petrasch, idem, Beil. Bd. 17, p. 498, 1903; H. H. Reiter, idem, Beil. Bd. 22, p. 183, 1906; R. Freis, idem, Beil. Bd. 23, p. 43, 1907; and V. Pöschl, Centralbl. Min. Geol. Pal., 1906, p. 571. Freis has much to say about eutectics. These writers were students or assistants of Doelter.

[d] Neues Jahrb., 1882, pt. 2, p. 1. Compare papers by J. Joly, Proc. Roy. Soc. Dublin, vol. 9, p. 298, 1900; J. A. Cunningham, idem, p. 383, 1901; and W. J. Sollas, Geol. Mag., 1900, p. 295. On the order of consolidation of magmatic minerals there is a copious literature.

present, quartz. The rule, however, is not and can not be universal, and to it there are many exceptions. Its common validity must be ascribed to the fact that most igneous rocks are formed from relatively few components, with a correspondingly moderate number of possibilities. So far as they are of the same general nature they consolidate most commonly in the same general way.

To a limited degree, minerals are deposited from a magma in the reverse order of their fusibility, the more infusible first; but the rule, as we have seen, is by no means general. In certain cases, however, it holds, especially in the formation of the successive members of an isomorphous series. Plagioclase feldspars, for example, often exhibit a zonal structure, with the less fusible lime salts concentrated at the crystalline centers, and the more fusible soda salts proportionally more abundant around their outer surfaces. The order of fusibility seems to be rather a minor factor in the process of mineral formation during magmatic cooling. The early crystallization of leucite and olivine may be due either to their relative infusibility, to their insolubility in the remainder of the magma, or, as Doelter[a] supposes, to their superior stability at high temperatures. The interpretation of the evidence is by no means a simple affair.[b]

DIFFERENTIATION.

The question whether there is, within the earth, a single, sensibly homogeneous magma, is one that concerns geology, but does not seem to be directly approachable through chemical evidence. If, however, we consider the problem locally, with reference to effusions from one definite volcanic center, the chemist may have something to say. Even here the discussion must be mainly physical, but chemical principles are also involved in its settlement, for the reason that chemical differences characterize the lavas, and they demand consideration.

It is now a commonplace of petrology that within a given area there may be a variety of igneous rocks, exhibiting a relationship to one another, and indicating, by their mode of occurrence, that they had a common origin. To what is this "consanguinity," as Iddings calls it, due? If the lavas, which may differ widely, came from one

[a] Sitzungsb. Akad. Wien, vol. 113, p. 495, 1904. Doelter gives many data on the separation of minerals during the cooling of melts of known composition. The different species were first fused together.

[b] The importance of discriminating between the fusibility of a mineral and its solubility in a magma is strongly emphasized by A. Lagorio, in Zeitschr. Kryst. Min., vol. 24, p. 285, 1895. Minerals may dissolve at temperatures far below their melting points, just as salt dissolves in water. It is also necessary to distinguish between simple solution and chemical reactivity. In the one process a body dissolves and recrystallizes from solution without change. In the other it dissolves because of reactions with the solvent, and new compounds are generated. In either process, however, a solution may become saturated, and then its solvent action ceases.

and the same fissure or crater, how were their differences brought about? To this question there have been many answers, but its discussion still continues voluminously, and the last word is not yet said. If distinct magmas exist, which are ejected sometimes separately and sometimes commingling, the problem becomes apparently simple, and this method of solution has been repeatedly proposed. Bunsen assumed the existence of two such magmas, the normal pyroxenic and the normal trachytic, and Durocher has put forth similar views. Other petrologists have thought that there are more than two fundamental magmas, but such a multiplication of assumptions can only end in confusion. The conception is simple enough, but its application to observed phenomena is quite the reverse. With this phase of the question chemistry has little to do. The prevalent modern opinion favors the idea that at each specified locality there is one essentially homogeneous magma, from which, by some process of differentiation, the various rock species of the region have been derived. Under what conditions and by what processes can such a differentiation be produced? Upon this problem, presented in this form, physical chemistry has some suggestions to offer, regardless of the antecedent assumption or of the geological evidence upon which it is based.

It is not necessary for us now to consider the historical aspect of the discussion, for that has been well done by several other writers. J. P. Iddings, especially, in his memoir upon the origin of igneous rocks,[a] and more recently W. C. Brögger[b] and F. Loewinson-Lessing[c] have done full justice to this side of the question. We need only take up broadly the hypotheses which have been suggested in order to explain the observed differentiation, and examine them as to their validity. An exhaustive discussion of details is out of the question.

Although R. W. Bunsen was the first to show that a magma is really a solution, little attention was paid to this consideration until A. Lagorio,[d] in 1887, published his famous memoir on the nature of the "glass base" or groundmass. In developing his fundamental conception, Lagorio called attention to "Soret's principle," which asserts that when two parts of the same solution are at different temperatures, there will be a concentration of the dissolved substance in the cooler portion. Through the operation of this process, namely, unequal cooling, it was thought that a homogeneous molten mass might become heterogeneous, the substances with which a magma was most nearly saturated tending to accumulate at the cooler points,

[a] Bull. Phil. Soc. Washington, vol. 12, p. 89, 1892.

[b] Die Eruptivgesteine des Kristianiagebietes, pt. 3, pp. 276 et seq., 1898.

[c] Compt. Rend. VII Cong. géol. internat., p. 308, 1897.

[d] Min. pet. Mitth., vol. 8, p. 421, 1887. This memoir is rich in references to former literature.

leaving the warmer portions with an excess of the solvent material. This view was speedily adopted by many petrographers, but objections to it were soon found, and it is now generally abandoned. G. F. Becker[a] showed that to produce the observed phenomenon in so viscous a medium as molten lava by such a process of molecular diffusion would require almost unlimited time; and H. Bäckström[b] pointed out that although the operation of Soret's principle might cause changes in the absolute concentration, it could no more alter the *relative* proportions of the dissolved substances than it could in a mixture of gases.

Another process which surely plays a part in the differentiation of magmas is the solution of foreign material. The molten lava, as it rises from the depths to the surface of the earth, is inclosed between walls of rock upon which it exerts a solvent action. This action may be very slight or it may be important; and its extent will depend on the character of the magma, the character of the rock with which it is in contact, the temperature, and the pressure. Not one of these factors can be set aside as negligible. The absorbed rock may be either igneous or sedimentary; the effect produced upon it may be limited to a thin contact zone or it may permeate large masses of material; and no general rule governs the process entirely. The wall rock varies in solubility with respect to the magma, and this condition, modified as it must be by variations in temperature, is of prime importance. If a magma is saturated with respect to the substances contained in its walls, its solvent action will be slight; if unsaturated, its activity must be greater. A basaltic magma should take up silica; a siliceous magma might absorb bases. For example, blocks of limestone, more or less altered by contact with the molten magma, are ejected from some volcanoes, and may be found embedded in the solidified lavas. In extreme cases they may disappear entirely, leaving a local enrichment in lime salts as evidence of their former nature.[c] This general process, this assimilation of extraneous material, is given much weight by Johnston-Lavis and Loewinson-Lessing in their discussions of magmatic differentiation; but its

[a] Am. Jour. Sci., 4th ser., vol. 3, p. 21, 1897.

[b] Jour. Geol., vol. 1, p. 773, 1893. See also F. Loewinson-Lessing, Compt. Rend. VII Cong. géol. internat., p. 390, 1897.

[c] See, for example, H. J. Johnston-Lavis, The ejected blocks of Monte Somma: Trans. Edinburgh Geol. Soc., vol. 6, p. 314, 1892-93. Also a paper in Natural Science, vol. 4, p. 134, 1894. F. Loewinson-Lessing (loc. cit.) gives many other references to literature on this subject. For experimental data on the solubility of corundum, emery, andalusite, kyanite, kaolin, pyrophyllite, leucite, and quartz in magmas, see A. Lagorio (Zeitschr. Kryst. Min., vol. 24, p. 285, 1895); also C. Doelter and E. Hussak (Neues Jahrb., 1884, pt. 1, p. 18), who operated on olivine, pyroxene, hornblende, biotite, feldspars, quartz, garnet, iolite, and zircon in much the same way. How far these experiments, conducted on small samples during short times, can be used to illustrate natural phenomena is doubtful, but they do give some information of value. On the absorption of limestone by granite, see A. Lacroix, Compt. Rend., vol. 123, p. 1021, 1896.

effectiveness is by no means universally admitted. R. A. Daly,[a] a recent advocate of the assimilation theory, has sought to explain the mechanism of igneous intrusions by a process which he calls "magmatic stoping." He supposes that a batholithic magma eats its way up by solvent action on the invaded rocks. Blocks of the latter, loosened by this process, sink into the fluid mass and are gradually dissolved. Thus the composition of the magma is altered. Daly also argues in favor of the view that such a magma, by "gravitative adjustment," will separate into layers, the denser submagma below, the lighter above. The latter conception is not new, and has had many supporters.

The hypothesis advanced by A. Michel Lévy [b] that differentiation is brought about chiefly by a circulation at high temperatures and under great pressures of the so-called "fluides mineralisateurs"—that is, of water and the other vapors or gaseous contents of the magma—is one which deserves serious consideration. These agents are supposed to entangle certain other constituents, the lighter substances of the magma, and to concentrate them in the upper layers of the fused mass. Silica and the feldspathic minerals would thus accumulate near the top of a volcanic reservoir, leaving the ferromagnesian minerals in greater proportion at the bottom—an order corresponding with a common order of ejectment during eruptions. This order, however, is not invariable, and in Great Britain, according to A. Geikie,[c] it was generally reversed. There the femic rocks represent the earliest outflows and the salic rocks came later. A progressive enrichment in silica took place, instead of the impoverishment that Michel Lévy's process would imply. In the Yellowstone Park, according to J. P. Iddings,[d] lavas of medium composition were emitted first, and the differentiation was a splitting up of the magma into femic and salic portions. The sequence of lavas, then, appears to have been different in different regions, and the irregularities remain to be explained. Apart from this digression, however, the suggestions of Michel Lévy should be borne in mind. The magmatic vapors must exert an important influence upon the process of differentiation, for they tend to accumulate in the upper part of a lava column or reservoir and to modify its properties locally. It is quite possible that they may

[a] Am. Jour. Sci., 4th ser., vol. 15, p. 269, 1903; vol. 16, p. 107, 1903; vol. 20, p. 185, 1905; and in the Rosenbusch "Festschrift," 1906, p. 203. See also Bull. U. S. Geol. Survey No. 209, p. 104, 1903, on the rocks of Mount Ascutney. A discussion of Daly's views, mainly adverse, at a meeting of the Geological Society of Washington, is reported in Science, vol. 25, p. 621, 1907. J. H. L. Vogt (Die Silikatschmelzlösungen, pt. 2, p. 225, 1904) regards the assimilation theory as quite untenable.

[b] Bull. Soc. géol., 3d ser., vol. 25, p. 367, 1897.

[c] The Ancient Volcanoes of Great Britain, vol. 2, p. 477, 1897.

[d] Bull. Phil. Soc. Washington, vol. 12, p. 89, 1892. Compare J. E. Spurr, Jour. Geol., vol. 8, p. 621, 1900, on the succession of the igneous rocks in the Great Basin of Nevada. Spurr gives a good historical summary of the subject, beginning with the pioneer work of Richthofen.

bring to the top some of the more easily sublimable oxides or silicates, together with decomposable fluorides and chlorides, and during an eruption these substances would be ejected first. A complete segregation, however, is not assumed—only a differential concentration of the magmatic components.

In a later paper than that previously cited G. F. Becker [a] has shown that fractional crystallization may have been an important factor in producing differentiation. This is a process which is well understood, and it must have been more or less operative. From this point of view magmatic differentiation becomes a part of the general cooling process, and not a phenomenon to be considered aside from the ordinary solidification of a lava. The magma, whether it is forming a dike or a laccolith, is inclosed between walls which are cooler than itself, and along these surfaces the less fusible or less soluble minerals will first crystallize. The process is aided by the circulation of convection currents; and that portion of the fused mass which last solidifies, the mother liquor, will be the portion of maximum fusibility, and, therefore, approximate to a eutectic mixture. The center of the dike or laccolith will thus have one composition and its outer parts another. In his memoir upon the Highwood Mountains L. V. Pirsson [b] discusses the process in some detail, and shows how convection and crystallization may go on together. When great differences in specific gravity exist, as in the separation of the heavy titaniferous magnetite of the Adirondacks from the lighter rocks of the same magmatic mass,[c] the crystallizing substances may settle to the bottom, and form a distinct layer quite unlike the superincumbent material. In the differentiation of the eruptive iron ores of Norway, as described by J. H. L. Vogt,[d] the same process may operate, although Vogt gave another interpretation to the phenomena. In cases of this kind the liquation hypothesis of J. Durocher [e] may be partly applicable, and we can easily conceive of the cooling magma as separating into lighter and heavier layers, even before solidification begins. Kemp, in the paper just cited, remarks that copper matte settles out almost completely from a viscous mixture of matte and slag, although in a large mass of magma convection currents might hinder the perfect working of such a process. Liquation, then, must be regarded as a possible mode of differentiation, but probable only in certain special cases. It implies a limited miscibility of the magmatic solu-

[a] Am. Jour. Sci., 4th ser., vol. 4, p. 257, 1897.

[b] Bull. U. S. Geol. Survey No. 237, p. 183, 1905. Compare also A. Harker, Quart. Jour. Geol. Soc., vol. 50, p. 324, 1894; and T. L. Walker, Am. Jour. Sci., 4th ser., vol. 6, p. 410, 1898.

[c] See J. F. Kemp, Nineteenth Ann. Rept. U. S. Geol. Survey, pt. 3, p. 417, 1899.

[d] See summary by J. J. H. Teall in Geol. Mag., 1892, p. 82.

[e] Ann. mines, 5th ser., vol. 11, p. 217, 1857.

tions, and that does not often occur. J. Morozewicz,[a] however, in his experiments upon artificial magmas, observed several cases in which his melts differed in composition from top to bottom, the undermost portion being the heaviest. Similar differences of density are well known to the glass makers, as shown by variations in refractive capacity between the top and bottom portions of their melts. Such a "gravitative adjustment" is presumably most effective in slowly cooling magmas, especially when partial crystallization has occurred. The minerals first formed must have time to sink. The rate of cooling, therefore, is a distinct factor in the differentiation of igneous rocks.

To these agencies in the process of differentiation must be added that of pressure. This has been taken into account by Martin Schweig,[b] whose views may be briefly summarized or paraphrased as follows: In a molten magma, under great pressure, partial crystallization occurs; the crystals formed sink within the fluid mass, while their mother liquor accumulates above them. An eruption takes place, the mother liquor is ejected, and with the consequent relief of pressure the fusibility of the separated crystalline matter is increased. The latter, remelted, is expelled by a later explosion, and in this way the magma, originally homogeneous, gives rise to two or more different lavas, emitted from the same vent. The separation is effected in the first place by fractional crystallization, aided by gravity; and then, under reduced pressure, the crystalline layer again liquefies.

This is a plausible hypothesis, but it leaves some things out of account. Pressure, in the first instance, raises the melting points of the fused minerals, but the water and gases dissolved in the magma act in the opposite way. They tend to make the magma more fusible. When, by eruption, these gases escape, there will be a decrease of fusibility to offset the gain from reduced pressure, and what the algebraic sum of this gain and loss may be no man can say. The opposing tendencies may balance, but it is more probable that one or the other will be the stronger, and beyond this point, with the available evidence, our reasoning can not go. During an eruption the composition of a magma, its gaseous load, its temperature, and the pressure on it are all varying; some of the variations are slow and gradual, others are rapid; heat may be lost by cooling[c] or evolved by chemical change; and no equation can yet be written in which each of these factors shall receive its proper valuation. After eruption the

[a] Min. pet. Mitth., vol. 18, p. 233, 1888–89.

[b] Neues Jahrb., Beil. Bd. 17, p. 516, 1903. Originally published as a doctoral dissertation. The paper contains a good summary, down to 1903, of the entire subject of differentiation.

[c] The sudden expansion of the gases released at the beginning of a volcanic eruption must exert a noteworthy cooling effect on the residual magma.

phenomena are less complex; but even then we are only able to follow them partially. Fractional crystallization, liquation, the influence of dissolved vapors, and the assimilation of foreign material are all intelligible processes, but the first one named is the most general and presumably the most important of all. Even its influence is variable, however, becoming zero in a eutectic mixture, and increasing in potency as we recede from the eutectic point. The more closely the composition of a magma approaches eutectic ratios, the less capable of fractionation it becomes.

RADIOACTIVITY.

This chapter would be incomplete without some reference to recent speculations upon the sources of volcanic heat. That heat, hitherto, has been commonly referred either to the molten matter left over after the consolidation of the lithosphere, or to a generation from mechanical sources, such as pressure and the friction due to movements within the crust. The discovery of radium, however, which emits heat continuously, has led to new conceptions which are at least worth mentioning.

Maj. C. E. Dutton [a] has suggested that volcanic heat may be developed by radioactivity in limited tracts from 1 to 3 and not over 4 miles below the surface of the earth. Heat thus developed might so accumulate as to fuse the rocks in which it was generated. In time, when enough material was melted, the water inclosed in the magma thus produced would become explosive, and an eruption would follow. Then a period of quiet would ensue, more heat would be released by the subterranean radium, and another explosion would occur. Thus Dutton explains the periodicity of eruptions, and he argues that no permanent reservoirs of molten magma are required in order to account for volcanic phenomena. Dutton's views have been opposed by G. D. Louderback,[b] partly on geological grounds, and partly because radiferous minerals, such as uraninite, are not found among volcanic products. On the other hand, the lavas of Vesuvius [c] and Etna [d] have been shown to be radioactive, and R. J. Strutt [e] has found radioactivity in many igneous rocks. The granites are most active, the subsilicic rocks least, but on the whole the distribution of radium within the earth seems to be fairly uniform, and from its decay the internal heat must be, in part at least, derived. Whether all or even a large portion of it is so generated is another question. G.

[a] Jour. Geol., vol. 14, p. 259, 1906.
[b] Idem, vol. 14, p. 747, 1906.
[c] See O. Scarpa, Atti Accad. Lincei, 5th ser., vol. 16, p. 44, 1907; also R. Nasini and M. G. Levi, idem, vol. 15, p. 391, 1906.
[d] G. T. Castorina, Neues Jahrb., 1907, p. 11 (abstract).
[e] Proc. Roy. Soc., vol. 77, ser. A, p. 472, 1906.

von dem Borne [a] has also reported that the granite of the Erzgebirge is strongly radioactive. The distinctly radioactive minerals, the ores of uranium and thorium, are, it should be remembered, principally found in granite and pegmatite. Evidently a new field has been opened to investigation, and the discoveries to be made within it are likely to have very definite bearing upon geological problems.[b]

---

[a] Zeitschr. Deutsch. geol. Gesell., vol. 58, p. 1, 1906.

[b] See also memoirs by A. S. Eve, Phil. Mag., 6th ser., vol. 12, p. 189, 1906, and G. A. Blanc, idem, vol. 13, p. 372, 1907. On radioactivity in Australian minerals, see D. Mawson and T. H. Laby, Chem. News, vol. 92, p. 39, 1905. Other notes on the relations of radium to geology have been published by T. M. Reade, Geol. Mag., 1906, p. 79; J. Joly, Nature, vol. 75, pp. 294, 342, 1907, and W. J. Sollas, idem, p. 319. E. Rutherford, in his Radioactive Transformations, p. 213, New York, 1903, has calculated the amount of radioactive matter needed to account for the internal heat of the earth, and has applied his figures to a computation of the age of our planet. This age he estimates as several hundred millions of years. On radium in rocks near Montreal see A. S. Eve and D. McIntosh, Phil. Mag., 6th ser., vol. 14, p. 231, 1907.

CHAPTER X.

ROCK-FORMING MINERALS.

PRELIMINARY STATEMENT.

When a magma solidifies, it may do so either as a glass or as an aggregate of crystalline minerals. In the latter process, which is the first step in the general process of magmatic differentiation, and in which molecular diffusion plays an important part, each mineral is distinctly marked off in space and occupies a region of its own. It may not be pure; it may entangle, during its formation, particles of other substances, but its definiteness and integrity are none the less clear.

Although more than a thousand distinct mineral species are known to science, only a relatively small number of them are in any sense abundant or to be reckoned as essential constituents of rocks. An igneous rock is usually a mixture of silicates, containing, as basic metals, potassium, sodium, calcium, magnesium, iron, and aluminum, with oftentimes free silica. Other substances are present only in quite subordinate proportions. There may be small quantities of phosphates, especially apatite, some fluorides, various free oxides, the titanium minerals, zircon, sulphides in trivial amount, and sometimes free elements, such as graphite or metallic iron; but these constituents of a rock have only minor significance, except in some exceedingly rare instances. The exceptions need not be considered now.

Each mineral species, using the word in its rigorous sense, is a definite chemical entity, capable of formation only under certain distinct conditions, and liable to alteration in various ways. Each one may be studied as it exists in nature, with the alterations which it there undergoes; or it may be investigated synthetically, with reference to its possible modes of origin, or by analytical methods in order to determine what transformations it is likely to experience. Both methods, the experimental and the observational, furnish legitimate lines of attack upon geological problems. A mineral, with its associations, is a record of chemical changes that have taken place, but they do not end its history. It is still subject to decay—that is, to transformations into other forms of matter, and their study, chemically or in the field, constitutes an important part of metamorphic geology. Alteration products are highly significant, but their investigation demands extreme caution. Errors of diagnosis have been common in

the past, both as to the nature of substances and with regard to their implications; and each reported case of alteration, therefore, should be submitted to the severest scrutiny. A compact muscovite, for example, may easily be mistaken, on superficial examination, for talc or serpentine; and errors of that kind may deprive an otherwise good observation of all its meaning.

Many compounds, identical with natural minerals, have been prepared by laboratory methods, which may either reproduce the conditions existing in nature or vary widely from them. Each substance can be made in several different ways, and so the results of experiment may or may not have geological significance. In one process the conditions of a cooling magma are exactly paralleled; whereas another may have no relation to the phenomena observed by the geologist. The correct interpretation of laboratory experiments is, therefore, an affair demanding nicety of judgment; and the discrimination between relevant and irrelevant data is not always easy. The synthesis of a mineral may be chemically important, and yet shed no light upon the problems of geology. Still, indirect testimony is often of value, and none of it should be rejected hastily.

In the following pages the more important minerals of the igneous and metamorphic rocks will be considered individually, from the various points of view indicated in the preceding paragraphs. Importance and abundance, however, do not always go together. A relatively infrequent mineral may be important for what it signifies, and therefore receive more attention here than some of the commoner species. In a general way the usual order of mineral classification will be followed, but not rigorously. In some cases, for petrographic purposes, two minerals may be studied consecutively which in a text-book upon mineralogy would be widely separated. The problems of paragenesis, which are all-important here, are quite independent of mineralogical classification. The titanium minerals—rutile, ilmenite, perofskite, and titanite, for example—can be properly considered successively, although one is an oxide, two are titanates, and the fourth is a titanosilicate. Petrographically they belong together; mineralogically they do not. So much premised, we may go on to study the individual species, as follows, beginning with the free elements, carbon and iron. The inclusion of diamond in this category may be justified by the fact that it is essentially a mineral of magmatic origin.

DIAMOND AND GRAPHITE.

Diamond.—Pure or nearly pure carbon. Isometric. Atomic weight, 12; molecular weight, unknown. Specific gravity, 3.5. Atomic volume, 3.4. Hardness, 10. Colorless to black, with various shades of yellow, green, blue, red, and brown. The black carbonado

has a specific gravity slightly below that of the pure diamond, ranging from 3.15 to 3.29. Fusibility unknown, probably above 3,000°. Combustible at high temperatures, between 800° and 850°, according to H. Moissan,[a] although oxidation begins at a point somewhat lower.

The diamond has been produced artificially in several ways. R. S. Marsden,[b] in 1880, claimed to have obtained minute crystals from the solution of amorphous carbon in molten silver. J. B. Hannay,[c] by heating amorphous carbon with bone oil and metallic lithium, under great pressure, also secured a few crystals of carbon which appeared to be in the form of diamond. Moissan,[d] however, was the first to obtain unimpeachable results. He dissolved carbon in melted iron, and cooled the mass suddenly under pressure. From the cooled iron, undoubted crystals of diamond were isolated. J. Friedländer[e] dissolved graphite in fused olivine and obtained small diamonds, and R. von Hasslinger,[f] by solution of amorphous carbon in an artificial magnesium silicate magma, was similarly successful. A little later R. von Hasslinger and J. Wolff[g] repeated and varied this experiment, using different magmas in order to determine under what conditions the diamonds would be formed. Magnesia and lime appeared to favor the crystallization of the carbon, but a high proportion of silica in the magma seemed to act adversely. According to Hasslinger and Wolff, a carbide is probably first produced, from which, later, the carbon separates in adamantine form. L. Franck and Ettinger[h] claim to have found diamonds in hardened steel, and A. Ludwig[i] observed their formation when an electric current was passed through an iron spiral embedded in powdered gas carbon, in an atmosphere of hydrogen and under great pressure. In a later investigation Ludwig[j] fused a mixture of carbon and iron in an electric stream, and then suddenly chilled the mass by admission to it of water under a pressure of 2,200 atmospheres. Under these conditions of pressure and instantaneous cooling the fused carbon solidified in the form of minute diamonds. With slow cooling the more stable graphite is produced. These observations accord with the recent conclusions of Moissan,[k] who finds that when carbon is raised to a high temperature at atmospheric pressure it volatilizes without fusion and on cooling

[a] Compt. Rend., vol. 135, p. 921, 1902.

[b] Proc. Roy. Soc. Edinburgh, vol. 11, p. 20, 1880–81. K. Chrustchoff (Zeitschr. anorg. Chemie, vol. 4, p. 472, 1893) also obtained diamonds from solution in silver. Molten silver, he says, can dissolve about 6 per cent of carbon.

[c] Proc. Roy. Soc., vol. 30, pp. 188, 450, 1880.

[d] Compt. Rend., vol. 116, p. 218, 1893. Also C. Friedel, idem, p. 224. See also Q. Majorana, Atti Accad. Lincei, 5th ser., vol. 6, pt. 2, p. 141, 1897.

[e] Abstract in Geol. Mag., 1898, p. 226.

[f] Monatsh. Chemie, vol. 23, p. 817, 1902.

[g] Sitzungsb. Akad. Wien, vol. 112, p. 507, 1903.

[h] Chem. Centralbl., 1896, pt. 2, p. 573. From Stahl u. Eisen, vol. 16, p. 585.

[i] Chem. Zeitung, vol. 25, p. 979, 1901.

[j] Zeitschr. Electrochemie, vol. 8, p. 273, 1902.

[k] Compt. Rend., vol. 140, p. 277, 1903. See also Ann. chim. phys., 8th ser., vol. 5, p. 174, 1905.

always yields graphite alone. In Moissan's work, however, external pressure is not applied. It is generated by internal expansion within the iron, when the surface of the latter is suddenly cooled. The addition of a little ferrous sulphide to the fused iron seems to increase the yield of diamonds.

According to G. Rousseau,[a] diamond is formed at ordinary pressures when acetylene, generated from calcium carbide, is decomposed by an electric current at a temperature of about 3,000°. C. V. Burton[b] claims to have obtained diamond crystals from solution in molten lead to which about 1 per cent of calcium had been added. Finally, Sir William Crookes[c] has detected diamonds in the ash of cordite which had been exploded in closed vessels. In the last instance the pressure generated must have been very high.

In nature the diamond is ordinarily found in gravels and until recently little was known of its parent rock. It has also been discovered in several meteorites, as in the meteoric stones of Novo-Urei, Russia,[d] and Carcote, Chile,[e] and the meteoric iron of Canyon Diablo.[f] The Novo-Urei stone is essentially a mixture of olivine, 67.48 per cent, with augite 23.82 per cent, and therefore resembles a peridotite. The Canyon Diablo iron contains nodules of iron sulphide, troilite, which recall Moissan's latest experiments, and also graphite. For each occurrence the artificial production of diamonds furnishes a parallel—Hasslinger's work in one case, Moissan's in the other.

The origin of the diamond as a mineral seems to be clearly indicated by the foregoing data. It is formed by crystallization from the solution of carbon in a fused magma, and the latter, in most cases, seems to have had the composition of a peridotite—an association which is also seen in the Novo-Urei meteorite. In the South African mines the diamonds occur in or near volcanic pipes, embedded in a decomposed rock, which has been described as a peridotitic tuff or breccia.[g] The volcanic character of this matrix or "blue ground" was early recognized, and several authorities, notably the late H. Carvill Lewis,[h] have ascribed the origin of the diamonds to the solvent action of the molten peridotite magma upon the carbonaceous shales through which it has penetrated. In some cases, however,

[a] Compt. Rend., vol. 117, p. 164, 1893.

[b] Nature, vol. 72, p. 397, 1905.

[c] Proc. Roy. Soc., vol. 76 A, p. 458, 1905.

[d] M. Erofèef and P. Latschinoff, Jour. Russ. Chem. Soc., vol. 20, p. 185, 1888. Abstract in Jour. Chem. Soc., vol. 56, p. 224, 1889.

[e] W. Will and J. Pinnow, Ber. Deutsch. chem. Gesell., vol. 23, p. 345, 1890.

[f] G. A. Koenig and A. E. Foote, Am. Jour. Sci., 3d ser., vol. 42, p. 413, 1891.

[g] See E. Cohen, 5. Jahresb. Ver. Erdkunde, Metz, p. 129, 1882.

[h] Papers before the British Association in 1886 and 1887. In full, edited by T. G. Bonney, in Papers and Notes on the Genesis and Matrix of the Diamond, London, 1897. See also L. de Launay, Les diamants du Cap, Paris, 1897, and G. F. Williams, The Diamond Mines of South Africa, New York, 1902. There is a copious journal literature on the African diamonds. A very recent memoir by R. Beck appears in Zeitschr. Deutsch. *geol. Gesell., vol. 59, p. 275, 1907.* It contains many bibliographic references.

these shales are absent, and W. Luzi[a] has shown that when "blue ground" is fused at a temperature of about 1,770° the diamonds which it contains are perceptibly corroded. That is, the magma itself is proved to be a solvent of carbon which may just as well have come from below as from contact metamorphism. In Lewis's papers it is pointed out that in a number of other regions diamonds are associated more or less closely with rocks of serpentinous—that is, peridotitic—character. T. G. Bonney,[b] however, has sought to prove that the true matrix of the Cape diamond is eclogite, from which he says the mineral has crystallized as an original constituent, just as zircon crystallizes from granite. The very intimate association of these diamonds with garnet lends support to this view. On the other hand, G. F. Williams[c] states that he crushed and examined 20 tons of eclogite at Kimberley and found no trace of diamonds. He also reports a Kimberley diamond which contained an inclusion of apophyllite. If the diagnosis was correct, it throws doubt upon the igneous origin of the gem, for apophyllite is a highly hydrous mineral.

But peridotite is not the only possible matrix for diamond. In Brazil it is associated with hydromica schists and the peculiar form of quartzite known as itacolumite; and O. A. Derby[d] finds no evidence of olivine rocks anywhere in the diamond-bearing region. Furthermore, near Bellary, Madras Presidency, India, M. Chaper[e] found the diamond to be apparently derived from a pegmatite consisting of rose-colored orthoclase and epidote. Near Inverell, New South Wales, T. W. Edgeworth David[f] found diamonds in a matrix of hornblende diabase. In short, though much evidence points to an igneous origin for the diamond, it is not necessary to assume that the same magma has yielded it in all cases.[g]

---

[a] Ber. Deutsch. chem. Gesell., vol. 25, p. 2470, 1892.

[b] Proc. Roy. Soc., vol. 65, p. 223, 1899. Bonney's view is accepted by A. L. Du Toit, Eleventh Ann. Rept. Geol. Commission, Cape of Good Hope, p. 135, 1907. G. S. Corstorphine (Trans. Geol. Soc. South Africa, vol. 10, p. 65, 1907) shows that the supposed eclogite, in which he found diamonds, consists really of garnet-pyroxene nodules which are inclosed in the kimberlite. These nodules are concretionary in character.

[c] Trans. Am. Inst. Min. Eng., vol. 35, p. 440, 1905.

[d] Am. Jour. Sci., 3d ser., vol. 24, 1882, p. 34; Jour. Geol., vol. 6, p. 121, 1898. For the minerals associated with Brazilian diamond see E. Hussak, Min. pet. Mitth., vol. 18, p. 334, 1898–99; and also in Zeitschr. prakt. Geol., 1906, p. 318. According to Hussak, the minerals of the Brazilian diamond sands are those derived from granites, gneisses, and older schists, such as amphibolite. An important earlier paper upon Brazilian diamonds is by C. Heusser and G. Claraz, Zeitschr. Deutsch. geol. Gesell., vol. 11, p. 448, 1859.

[e] Compt. Rend., vol. 98, p. 113, 1884. More fully, in Bull. Soc. géol., 3d ser., vol. 14, p. 330, 1885–86. The description of this pegmatite suggests a resemblance to the unakite of Virginia and North Carolina.

[f] Rept. Brit. Assoc. Adv. Sci., 1906, p. 562. See also Chem. News, vol. 96, p. 146, 1907.

[g] An excellent monograph on the diamond, by E. Boutan, forms a volume in Fremy's Encyclopédie chimique, Paris, 1886. It concludes with a very full bibliography. On diamonds in California, see H. W. Turner, Am. Geologist, vol. 23, p. 182, 1899. For a theoretical discussion on the genesis of the diamond, see A. Koenig, Zeitschr. Electrochemie, vol. 12, p. 441, 1906. On the recent discovery of diamonds in Arkansas, see *G. F. Kunz and H. S. Washington*, Am. Jour. Sci., 4th ser., vol. 24, p. 275, 1907.

Graphite.—Carbon, more or less impure. Rhombohedral. Atomic weight, 12; molecular weight probably below that of diamond. Specific gravity, 2.2. Atomic volume, 5.5. Hardness, 1 to 2. Color, steel gray to black. Fusibility unknown, probably above 3,000°. Combustible at temperatures between 650° and 700°.[a]

Graphite is easily produced artificially and is therefore a common constituent of furnace slags. Here it is derived from the fuel. It is made on a commercial scale by heating coke in the electric furnace, in which process, according to E. G. Acheson,[b] a carbide, possibly carborundum, SiC, is first formed. O. Mülhäuser[c] has shown that when carborundum is strongly heated the silicon is vaporized, leaving graphitic carbon behind. These reactions, connected with Moissan's discovery[d] of carborundum in the Canyon Diablo meteorite, associated with graphite and diamond, may have some geological significance. The fact that graphite is often found in meteorites proves that it has not necessarily an organic origin, an assumption which is sometimes made.

Graphite has also been prepared by passing vapors of carbon bisulphide or carbon tetrachloride over hot iron, but these processes seem to have little or no geological significance. Whether such substances occur in volcanic emanations is so far a matter of pure speculation. So also is E. Weinschenk's suggestion[e] that metallic carbonyls, rising from great depths, may yield graphite by their decomposition. None of these compounds has been identified in nature, and it is more than doubtful whether they could exist at magmatic temperatures. J. Walther[f] is inclined to attribute the Ceylon graphite to derivation from carboniferous vapors rising from the interior of the earth, and it is possible that hydrocarbons might yield the mineral. M. Diersche,[g] studying the same field, ascribes the formation of the graphite to the infiltration of liquid hydrocarbons and their decomposition by heat.

W. Luzi[h] has shown that amorphous carbon can be dissolved in a fused potash glass containing a little calcium fluoride and redeposited as graphite. In other words, graphite can form in a silicate magma, either in consequence of its contact with carbonaceous matter or as an original constituent brought up from below. In fact, graphite often originates as a product of contact metamorphism. L.

---

[a] H. Moissan, Compt. Rend., vol. 135, p. 921, 1902.
[b] Jour. Franklin Inst., vol. 147, p. 475, 1899.
[c] Zeitschr. anorg. Chemie, vol. 5, p. 111, 1894.
[d] Compt. Rend., vol. 140, p. 405, 1903.
[e] Comp. Rend. VIII Cong. géol. internat., vol. 1, p. 447, 1900.
[f] Zeitschr. Deutsch. geol. Gesell., vol. 41, p. 359, 1889. For a full account of the Ceylon graphite see A. K. Coomâra-Swâmy, Quart. Jour. Geol. Soc., vol. 56, p. 609, 1900. This paper contains a valuable bibliography.
[g] Jahrb. K.-k. geol. Reichsanstalt, Wien, vol. 48, p. 274, 1898.
[h] *Ber. Deutsch. chem. Gesell.*, vol. 24, p. 4093, 1891.

Jaczewski[a] regards the Siberian mineral as having been formed by just such a solution of coaly matter in eruptive magmas; but there are many occurrences of graphite that can not be accounted for in this way. Weinschenk,[b] for example, cites instances of an association of graphite with the higher oxides of iron and manganese, which amorphous carbon or the hydrocarbons distilled during contact of a magma with coal would reduce to lower forms. In these cases the metamorphosis of carbonaceous shales can hardly be assumed.

From what has been said it is evident that graphite may originate in diverse ways, and that in some cases its mode of formation is exceedingly obscure. Its commonest occurrences are in the crystalline schists, in which it often seems to replace mica. Graphitic granite, gneiss, mica schist, and quartzite are all well known, and the Laurentian limestones of Canada contain large quantities of the mineral. T. H. Holland,[c] however, has described an elæolite syenite from India in which graphite appears to be an original mineral; and Moissan[d] examined a pegmatite of unknown locality and reached a similar conclusion. Graphite is also found in the iron-bearing basalts of Ovifak, Greenland, embedded in feldspar and associated with native iron.[e] Graphite, then, sometimes appears as a direct separation from a magma, under conditions which preclude the supposition of an organic origin, or interpretation as a result of metamorphic action.

NATIVE METALS.

Native iron.—Isometric. Atomic weight, 55.9; molecular weight unknown. Specific gravity, 7.3 to 7.8, dependent upon the impurities. Atomic volume, 7.2. Color, steel gray to black. Malleable. Luster, metallic. Hardness, 4 to 5. Magnetic.

Minute grains of native iron are not uncommon in certain eruptive rocks, especially in basalts. They were first identified by T. Andrews[f] in the basalt of Antrim, Ireland. More recently they have been found by G. H. Cook[g] in the trap rocks of New Jersey; by G. W. Hawes[h] in the dolerite of Dry River, near Mount Washington, New Hampshire; by F. Navarro[i] in the basalt of Gerona, Spain; and by F. F. Hornstein[j] in basalt near Cassel, Germany. In the New Hampshire locality they occur inclosed in grains of magnetite, suggesting a secondary derivation of the latter mineral from the metal.

---

[a] Neues Jahrb., 1901, vol. 2, ref., p. 74.
[b] Compt. Rend. VIII Cong. géol. internat., vol. 1, p. 447, 1900.
[c] Mem. Geol. Survey India, vol. 30, p. 201, 1901.
[d] Compt. Rend., vol. 121, p. 538, 1895.
[e] See K. J. V. Steenstrup, Mineralog. Mag., vol. 6, p. 1, 1884; and J. Lorenzen, idem, p. 14.
[f] Rept. Brit. Assoc., 1852, pt. 2, p. 34.
[g] Ann. Rept. Geol. Survey New Jersey, 1874, p. 56.
[h] Am. Jour. Sci., 3d ser., vol. 13, p. 33, 1877.
[i] Geol. Centralbl., vol. 7, p. 184, 1905.
[j] Centralbl. Min. Geol. Pal., 1907, p. 276.

There are also a number of other European occurrences. E. Hussak [a] found particles of native iron in an auriferous gravel in Brazil; and A. Daubrée and S. Meunier [b] have described small masses of the metal from gold washings near Berezovsk, in the Ural. These masses were notable because of the fact that they contained traces of platinum, but no nickel. Their specific gravity was 7.59.

The most remarkable occurrence of native iron, however, is that discovered by A. E. Nordenskiöld [c] in 1870, at Ovifak, Disco Island, Greenland. Here large masses of iron, up to 20 tons in weight, had been weathered out like bowlders from the basalt, and in the rock itself lenticular and disklike pieces of the metal were still embedded. At first the iron was thought to be meteoric, but it has since been proved to be of terrestrial origin.[d] In nearly all respects it resembled meteoric iron, for it gave the Widmannstätten figures when etched, contained iron chloride, and was associated with magnetic pyrites and graphite. Schreibersite, the iron phosphide, which is common in meteorites, is, however, absent from the Ovifak masses. In the sample examined by Moissan [e] graphite, amorphous carbon, and grains of corundum were found.

This Ovifak iron is somewhat variable in composition, as the numerous analyses of it show.[f] The following analyses by J. Lawrence Smith are enough to indicate its general character:

Analyses of native iron from Ovifak, Greenland.

A. External oxidized coating of a large mass. Specific gravity, 5.
B. Particles of iron from interior of the mass A. Specific gravity, 6.42.
C. Malleable nodule from dolerite. Specific gravity, 7.46.
D. An irregular mass. Specific gravity, 6.80.

	A.	B.	C.	D.
Fe_2O_3	76.21	.....	.....	.....
Fe	16.56	93.16	90.17	88.13
Ni	1.08	2.01	6.50	2.13
Co	.48	.80	.79	1.07
Cu	.08	.12	.13	.48
S	1.12	.41	.....	.36
P	.14	.32	.....	.25
C	1.36	2.34	.....	2.33
Cl	.....	.02	.....	.08
MgO	.....	.....	.....	trace
SiO_2	.....	.....	1.54	.....
Silicates	.....	.....	.....	4.20
H_2O	4.50	.....	.....	.....
	101.53	99.18	99.13	99.03

[a] Bol. Comm. geog. e geol. São Paulo, No. 7, p. 14, 1890.
[b] Compt. Rend., vol. 113, p. 172, 1891.
[c] Geol. Mag., 1872, pp. 460, 516.
[d] There is abundant literature on this subject. See especially K. J. V. Steenstrup, Mineralog. Mag., vol. 6, p. 1884; J. Lorenzen, idem, p. 14; J. Lawrence Smith, Ann. chim. phys., 5th ser., vol. 16, p. 452, 1879; and A. Daubrée, Études synthétiques de géologie expérimentale, p. 555, 1879.
[e] Compt. Rend., vol. 116, p. 1269, 1898.
[f] See the memoirs, already cited, by Nordenskiöld, Lorenzen, and Smith. Also E. S. Dana, System of Mineralogy, 6th ed., p. 28.

The terrestrial nature of this iron is abundantly proved by the observations of Steenstrup, who found it disseminated throughout large bodies of basalt in place. It is, therefore, a part of the rock itself, but concerning its origin there has been much discussion. Was it present in the original magma or reduced by carbonaceous matter on its way up from below? The latter supposition is admissible, for Daubrée,[a] by fusing a lherzolite with carbon, obtained pellets of metallic iron, containing nickel and almost identical in composition with the specimens from Greenland. Furthermore, as Daubrée observes, beds of lignite are found on Disco Island, and graphite is closely associated with the native iron. The other alternative, however, is not excluded from consideration, and it may be that the iron came as such from great depths below the surface to teach us that the earth is essentially a vast meteorite and that its interior is rich in uncombined metals.[b] If the reduction theory held, we should expect to find similar occurrences of native iron wherever basalts or peridotite had penetrated carbonaceous strata. The rarity of the substance would seem to indicate a profounder origin.

In several localities metallic grains or nodules which approach native nickel in composition have been found in gravels. In meteorites the nickel rarely exceeds 6 or 7 per cent, but in these terrestrial products its proportion is usually much higher. From the drift of Gorge River on the west coast of New Zealand W. Skey[c] obtained grains of this character, which were associated with magnetite, tinstone, native platinum, etc. This awaruite, as Skey named it, is derived, according to G. H. F. Ulrich,[d] from neighboring serpentines or peridotites. The josephinite of W. H. Melville[e] from placer gravels in Josephine and Jackson counties, Oregon, forms pebbles up to several grams in weight and also occurs near large masses of serpentine. Its specific gravity is 6.204. In the sands of the Elvo, near Biella, Piedmont, A. Sella[f] found minute grains of a similar substance, but its geological origin was not determined. Their specific gravity was 7.8. Souesite consists of similar grains, found by G. C. Hoffmann[g] in sands of the Fraser River, in British Columbia. They were associated with native platinum, iridosmine, gold, etc., and had a specific gravity of 8.215. These grains are doubtless derived from peridotites. Still more recently a similar nickel iron from the south fork of Smith

[a] Études synthétiques de géologie expérimentale, pp. 517, 574, 1879.

[b] See also E. B. de Chancourtois, Bull. Soc. géol., vol. 29, p. 210, 1872. C. Winkler (Ber. Math. phys. Classe, K. sachs. Gesell. Wiss., February 5, 1900) suggests that iron and nickel may have been brought up from below as carbonyls, $Ni(CO)_4$, $Fe(CO)_5$, and $Fe_2(CO)_7$—compounds which decompose easily, depositing their metals in the free state. Compare Weinschenk's suggestion as to graphite, *ante*, p. 266.

[c] Trans. New Zealand Inst., vol. 18, p. 401, 1885.

[d] Quart. Jour. Geol. Soc., vol. 46, p. 619, 1890.

[e] Bull. U. S. Geol. Survey No. 113, p. 54, 1893.

[f] Compt. Rend., vol. 112, p. 171, 1891.

[g] Am. Jour. Sci., 4th ser., vol. 19, p. 319, 1905.

River, Del Norte County, California, has been described by G. S. Jamieson,[a] who has also reexamined the mineral from Oregon. The analyses are as follows:

Analyses of nickel iron.

A. Awaruite, Skey. B. Josephinite, Melville. C. Josephinite, Jamieson. D. Del Norte County, Jamieson. E. Souesite, Hoffmann. F. Piedmont. Analyzed for Sella by Mattirolo.

	A.	B.	C.	D.	E.	F.
Ni	67.63	60.45	68.61	68.46	75.50	75.2
Co	.70	.55	1.07	1.07	none	
Fe	31.02	23.22	19.21	18.97	22.02	26.6
Fe_7S_8		.55				
S	.22		.05	.05		
Cu		.50	.59	.56	1.20	
As		.23				
P			.04	.04		
Chromite and magnetite		.12				
SiO_2	.43		.10	.19		
Silicates		12.26			1.16	
Insoluble			9.45	9.97		
MgO			.50	.44		
H_2O at 100°		.81				
H_2O above 100°		1.12				
Cl		.04				
CO_2		trace				
Volatile matter		.70				
	100.00	100.55	99.62	99.75	99.88	101.8

The silicate in Melville's analysis was mainly serpentine, with what appeared to be an impure bronzite. The probable derivation of the nodules from peridotite is thus materially emphasized. With these substances two meteorites only, or supposed meteorites, can be compared. That found in an Indian mound in Oktibbeha County, Mississippi, contained 59.69 per cent Ni and 37.97 per cent Fe; and that from Santa Catarina, Brazil, carried 63.69 Fe with 33.97 Ni. These masses, however, are only presumably, not certainly, meteoric.

Occasionally native iron is found of secondary origin produced by the obvious reduction of iron compounds. On North Saskatchewan River, 70 miles from Edmonston, beds of lignite have burned, reducing the neighboring clay ironstone to metallic iron. According to J. B. Tyrrell,[b] masses of iron can be picked up in this locality which weigh from 15 to 20 pounds. G. C. Hoffmann[c] has described spherules of iron in limonite, found in fissures in quartzite on St. Josephs Island, Lake Huron; and again from a pegmatite from Cameron Township, Ontario.[d] The exact origin of these Canadian irons is not clear. Finally, E. T. Allen[e] has analyzed soft, malleable iron from borings at three points in Missouri, where it occurred in sedimentary rocks not far from beds of coal. The following analyses

[a] Am. Jour. Sci., 4th ser., vol. 19, p. 413. Jamieson urges that the original name awaruite should be used for all these nickel irons.

[b] Am. Jour. Sci., 3d ser., vol. 33, p. 73, 1887.

[c] Trans. Roy. Soc. Canada, vol. 8, pt. 3, p. 39, 1890.

[d] *Ann. Rept.* Geol. Survey Canada, vol. 6, p. 23 R, 1895.

[e] *Am. Jour. Sci.*, 4th ser., vol. 4, p. 99, 1897.

of these products will serve to show the great difference between them and the supposedly magmatic irons described in the preceding pages.

Analyses of native iron of secondary origin.

A. From St. Josephs Island, Hoffmann. Specific gravity, 6.8612.
B. From Cameron Township, Ontario. Analysis by Johnston for Hoffmann. Specific gravity, 7.257.
C. From Cameron, Missouri, Allen.
D. From Weaubleau, Missouri, Allen.
E. From Holden, Missouri, Allen.

	A.	B.	C.	D.	E.
Fe	88.00	90.45	99.16	99.39	97.10
Ni	.10	trace	.....	.....	.....
Co	.21	none	.....	.....	.....
Mn	.51	.75	.....	.....	.....
Cu	.09	none	.....	.....	.....
S	.12	undet.	.....	.....	.....
P	.96	undet.	.207	undet.	undet.
C	(?)	.....	.065	.13	.176
SiO_2	.....	.....	.37	.31	1.65
Insoluble	9.76	7.26	.....	.....	.....
Organic matter	undet.	.....	.....	.....	.....
	99.75	98.46	99.802	99.83	98.926

Not only iron but other native metals may occur as primary constituents of igneous rocks. Platinum, with its companions, osmium, iridium, rhodium, ruthenium, and palladium, are associated with chromite and olivine in peridotites.[a] W. Möricke[b] has found primary gold in a pitchstone from Guanaco, Chile, and G. P. Merrill[c] has described a granite from Sonora in which it also appears. Still other examples are cited by R. Beck.[d] The metallic constituents of magmas, however, have received very little attention so far, and their number may be greater than it is now supposed to be.

SULPHIDES.

Pyrite.—Isometric. Composition, FeS_2. Molecular weight, 120. Specific gravity, 4.95 to 5.10. Molecular volume, 24. Color, brass-yellow; luster, metallic. Hardness, 6 to 6.5.

Pyrrhotite.—Hexagonal. Composition uncertain, varying from Fe_7S_8 to $Fe_{11}S_{12}$. Specific gravity, 4.6. Color, bronze-yellow to copper-red; luster, metallic. Magnetic. Hardness, 3.5 to 4.5. Whether troilite, FeS, which is a common mineral in meteorites, is identical with pyrrhotite or not is a disputed question that need not be considered here.[e]

[a] See J. F. Kemp, Bull. U. S. Geol. Survey No. 193, 1902, for a complete summary of our knowledge concerning native platinum, with many bibliographic references.
[b] Min. pet. Mitth., vol. 12, p. 195, 1891.
[c] Am. Jour. Sci., 4th ser., vol. 1, p. 309, 1896.
[d] Lehre von den Erzlagerstätten, 2d ed., 1903. See also W. H. Weed, Eng. and Min. Jour., vol. 77, p. 440, 1904; and R. W. Brock, idem, p. 511.
[e] See S. Meunier, Ann. chim. phys., 4th ser., vol. 17, p. 36, 1869; and G. Linck, Ber. Deutsch. chem. Gesell., vol. 32, p. 895, 1899.

Both pyrite and pyrrhotite are common though minor accessory constituents of igneous rocks. Pyrite is found under a great variety of associations, but pyrrhotite is more characteristic of the ferromagnesian varieties, such as gabbro, diabase, diorite, and basalt.

Pyrrhotite has been observed as a furnace product and both species can be made artificially by various processes. Those which explain the formation of sulphides in sedimentary rocks will be considered in another connection, but the following experimental data bear upon their occurrence in igneous formations.

J. Durocher,[a] by mingling the vapor of iron chloride with hydrogen sulphide in a porcelain tube heated to redness, obtained small crystals of pyrite. By heating magnetite to whiteness in hydrogen sulphide, T. Sidot [b] produced crystals which appeared to be identical with troilite. Troilite was also formed by R. Lorenz,[c] who heated iron to redness in a stream of H_2S. C. Doelter,[d] on the other hand, by the same reaction, and also with amorphous ferric oxide or hematite instead of metallic iron, obtained pyrite. When ferrous carbonate or sulphate was used, troilite was formed. All of these methods are general. With other metals or their salts other crystallized sulphides, identical with natural minerals, can be produced. In brief, gases or vapors which exist in volcanic exhalations can so react upon one another as to develop crystalline sulphides. The latter appear in or upon the solidified rocks, but preferably in rocks which have cooled under pressure. By pressure the reacting vapors are confined within the magma, and can not readily escape.

Metallic sulphides, fairly crystallized, can also be formed in the wet way, when appropriate mixtures are heated together in sealed tubes. H. de Senarmont [e] heated various metallic solutions with hydrogen sulphide or alkaline sulphides in this manner with great success, and when iron salts were taken pyrite was formed. C. Geitner [f] also obtained pyrite by heating powdered basalt with water and sulphurous acid to 200°. Doelter [g] prepared pyrite by heating hematite, magnetite, or siderite with hydrogen sulphide and water for seventy-two hours to 80° or 90°. When the same investigator [h] heated ferrous chloride with sodium carbonate, water, and hydrogen sulphide for sixteen days to 200° he obtained pyrrhotite, provided that air was excluded from his tubes. In presence of air pyrite was formed.

---

[a] Compt. Rend., vol. 32, p. 823, 1851.
[b] Idem, vol. 66, p. 1257, 1868.
[c] Ber. Deutsch. chem. Gesell., vol. 24, p. 1504, 1891.
[d] Zeitschr. Kryst. Min., vol. 11, p. 30, 1886.
[e] Compt. Rend., vol. 32, p. 409, 1851.
[f] Ann. Chem. Pharm., vol. 129, p. 350, 1864.
[g] Zeitschr. Kryst. Min., vol. 11, p. 30, 1886.
[h] Min. pet Mitth., vol. 7, p. 535, 1885–86.

All these processes find some equivalent in nature. Dry gases, wet gases, and alkaline solutions charged with hydrogen sulphide are capable of producing the minerals which are now under consideration, with other rarer species of the same class. The magmas contain the reagents, and the reactions, or reactions like those just described, naturally follow. In most cases the sulphides appear as secondary minerals, but they are sometimes primary. J. H. L. Vogt[a] has shown that sulphides are actually soluble in silicate magmas, especially at the higher temperatures, and that they are among the earliest minerals to crystallize. Certain of the pyrrhotite deposits of Norway he regards as the direct products of magmatic segregation.

Isomeric with pyrite is the less stable species marcasite, which, however, is not found in igneous rocks. It is common in sedimentary formations and in metalliferous veins, but its mode of formation is unknown. The two species probably differ in molecular arrangement, but the evidence upon this point is far from conclusive. Various structural formulæ have been proposed for them, but none has been definitely established.[b]

Pyrrhotite and marcasite both alter into pyrite, and all three species alter into limonite, goethite, hematite, and sulphates of iron. Perfect pseudomorphs of limonite after pyrite are common.[c]

Several other sulphides occasionally appear as primary minerals in igneous rocks. Molybdenite, MoS_2, is common in granites, and J. F. Kemp,[d] in a pegmatite dike in British Columbia, found masses of bornite, which appeared to be an original constituent of the rock. In the augite syenite of Stokö, near Brevik, Norway, the arsenide, löllingite, $FeAs_2$, appears to have crystallized before the feldspar. The pegmatites of that region, as described by W. C. Brögger, also contain molybdenite, zinc blende, pyrite, galena, and chalcopyrite.[e] Some of these occurrences and many occurrences of pyrite also are doubtless secondary.

FLUORIDES.

Fluorite.—Isometric. Composition, CaF_2. Molecular weight, 78.1. Specific gravity, 3.18. Molecular volume, 24.5. Hardness, 4. Colorless, yellow, red, blue, green, purple, violet, etc.

---

[a] Die Silikatschmelzlösungen, pt. 1, p. 96, 1903. See also Zeitschr. prakt. Geol., 1898, p. 45; and Trans. Am. Inst. Min. Eng., 1901, p. 131. For sulphides in slags, see J. H. L. Vogt, Mineralbildung in Schmelzmassen, Christiania, 1892. See also J. E. Spurr, Trans. Am. Inst. Min. Eng., vol. 33, p. 306, 1903, on Alaskan pyrrhotite.

[b] See E. Weinschenk, Zeitschr. Kryst. Min., vol. 17, p. 501, 1890; A. P. Brown, Proc. Am. Phil. Soc., vol. 33, p. 225, 1894; and H. N. Stokes, Bull. U. S. Geol. Survey No. 186, 1901. Stokes describes many elaborate experiments upon the relative solubility of pyrite and marcasite in chemical reagents.

[c] For a discussion in extenso of the decomposition of pyrite, see A. A. Julien, Ann. New York Acad. Sci., vol. 3, p. 365, 1886; vol. 4, p. 125, 1887.

[d] Trans. Am. Inst. Min. Eng., vol. 31, p. 182, 1901.

[e] See Zeitschr. Kryst. Min., vol. 16, pt. 2, pp. 5–11, 1890. For very complete analyses of Norwegian pyrite, see E. Boettker, Rev. gén. chim. pure et app., vol. 9, p. 323.

Fluorite, although most abundant as a vein mineral and in sedimentary formations, is also found as a minor accessory in granite, gneiss, quartz porphyry, syenite, elæolite syenite, and the crystalline schists. W. C. Brögger[a] reports it, both as an early separation in the augite syenites of Norway, and also as a contact mineral. It sometimes appears as a sublimation product or as the result of the action of fluoriferous gases upon other minerals, on volcanic lavas.[b] It is also produced as a secondary mineral from the decomposition of various fluosilicates. It alters into calcite, being attacked by percolating waters containing calcium bicarbonate or alkaline carbonates. Crystallized calcium fluoride has been prepared by several processes, but they shed little light upon its presence in igneous rocks.[c]

Several other fluorides are found associated with granites or pegmatites, such as tysonite, fluocerite, yttrocerite, etc. More important by far is the mineral cryolite, which forms a large bed in Greenland. According to F. Johnstrup,[d] it is a concretionary secretion in eruptive granite. Cryolite is also found sparingly at Miask in the Urals and in the granites of Pikes Peak, Colorado.[e] It is a double fluoride of aluminum and sodium, Na_3AlF_6. Fluorine compounds, it must be observed, are rarely found in eruptive rocks. They are especially characteristic of the deep-seated or plutonic rocks, where the gaseous exhalations have been retained under pressure, and are commonly regarded as of pneumatolytic origin.

CORUNDUM.

Rhombohedral. Composition, aluminum oxide, Al_2O_3. Specific gravity, 3.95 to 4.10; of the purest material, 4.0. Molecular weight,[f] 102; molecular volume, 25.5. Colorless when pure, but ordinarily colored yellow, gray, green, red, or blue by traces of impurity. Emery is a mixture of corundum with magnetite or hematite, and sometimes spinel. Fusible at about 2,250° C., according to H. Moissan.[g] Hardness, 9, thus ranking among natural minerals next to diamond.

---

[a] Zeitschr. Kryst. Min., vol. 16, pt. 2, p. 56, 1890.

[b] Idem, vol. 7, p. 630, 1883. Abstract of memoir by A. Scacchi. For a study of the gases occluded by fluorite, see H. W. Morse, Proc. Am. Acad., vol. 41, p. 587, 1906. According to H. Becquerel and H. Moissan (Bull. Soc. chim., 3d ser., vol. 5, p. 154, 1891), free fluorine is sometimes present. W. J. Humphreys (Astrophys. Jour., vol. 20, p. 266, 1904) found spectroscopic traces of yttrium and ytterbium in many fluor spars. G. Urbain (Compt. Rend., vol. 143, p. 826, 1906) also found terbium, gadolinium, dysprosium, and samarium.

[c] See the works cited elsewhere in this chapter, by Brauns, Bourgeois, and Fouqué and Lévy.

[d] Cited by F. Zirkel, Lehrbuch der Petrographie, vol. 3, p. 444. The original memoir by Johnstrup is not within my reach.

[e] See the works cited elsewhere in this chapter, by Brauns, Bourgeois, and Fouqué and

[f] The ordinary rounded-off atomic weights may be used for computations of molecular weights and volumes.

[g] *Compt. Rend.*, vol. 115, p. 1034, 1892. 1,880° according to W. Hempel.

Crystallized alumina, artificial corundum, has been produced by various methods. These are well summarized in the works of Bourgeois and Fouqué and Lévy, and in the memoir by J. Morozewicz.[a] They may be briefly grouped as follows: First, by direct fusion of amorphous alumina. Second, by the crystallization of alumina from solution in various molten fluxes, such as potassium bichromate, sodium molybdate, borax, lead oxide, etc. Most of these processes find no equivalent in nature. Third, by the decomposition of aluminum chloride or fluoride by water at high temperatures—methods which may shed some light upon the formation of corundum as a contact mineral, or as a constituent of metamorphic rocks. In some of these reactions boric acid plays a part. Fourth, by the decomposition of other minerals, such as muscovite. Finally, by crystallization of artificial magmas.

It is not necessary for our purposes to examine these processes in detail. It is enough to select from among them those which seem to be the most significant. P. Hautefeuille and A. Perrey,[b] for example, dissolved alumina in melted nepheline, and found that upon cooling the greater part of it crystallized out as corundum. The association of corundum with certain nepheline syenites can be rationally studied in the light of this observation. With leucite a similar result was obtained; but an artificial potassium nepheline gave no similar reaction. A. Brun[c] prepared corundum, together with anorthite, by heating a mixture of 40 parts silica, 37 lime, and 120 alumina to whiteness for three hours. Fusion of the mixture, however, gave him only glass. When the alumina was reduced to 23 parts, zoisite was formed. W. Bruhns[d] obtained corundum in the wet way by heating alumina for ten hours to 300° in a platinum tube with water containing a trace of ammonium fluoride; but at 250° no crystallization took place. By similar reactions hematite, quartz, tridymite, and ilmenite were prepared. These experiments strengthen the supposition that the fluorine compounds contained in volcanic exhalations may assist the natural formation of the minerals named. P. Hautefeuille's synthesis of corundum[e] by the action of moist hydrofluoric acid upon alumina at a red heat is another illustration of the same principle. It is typical of a considerable number of mineral syntheses. That the fluorides are not essential to the formation of corundum, however, is shown by the experiments of G. Friedel.[f] When amorphous alumina is heated to 450–500° with a solution of

[a] Fouqué and Lévy, Synthèse des minéraux et des roches, Paris, 1882. L. Bourgeois, Reproduction artificielle des minéraux, in Fremy's Encyclopédie chimique, vol. 2, 1st appendix. Morozewicz, Min. pet. Mitth., vol. 18, p. 23, 1898.

[b] Bull. Soc. min., vol. 13, p. 147, 1890.

[c] Arch. sci. phys. nat., 3d ser., vol. 25, p. 239, 1891.

[d] Neues Jahrb., 1889, pt. 2, p. 62.

[e] Ann. chim. phys., 4th ser., vol. 4, p. 153, 1865.

[f] Bull. Soc. min., vol. 14, p. 8, 1891.

soda, corundum and diaspore, $HAlO_2$, are both produced. At 530–535° corundum alone formed, and at 400° only diaspore. If the alumina contained a little silica, crystals of quartz appeared. By a similar reaction between ferric hydroxide and soda solution, Friedel obtained crystals of hematite.

From a geological standpoint the most important experiments upon the genesis of corundum are those of Morozewicz,[a] who studied the conditions of its deposition from a cooling magma. He worked with artificial magmas upon a rather large scale, using the furnaces of a glass factory in preparing his melts; and he found that whenever the alumina, in comparison with the other bases, exceeded a certain ratio, the excess, upon cooling the fused mass, crystallized out completely either as corundum, as spinel, as sillimanite, or as iolite.[b] The qualifying conditions are as follows:

An alumosilicate magma in which the molecular ratio of the bases CaO, K_2O, Na_2O is to Al_2O_3 as 1 : 1 is said to be saturated with respect to alumina. If more alumina is present the magma is supersaturated, and the excess will be deposited as one or another of the above-named minerals. If we write the general formula for the magma of $RO.mAl_2O_3.nSiO_2$ the following rules are found to apply: First, if magnesia and iron are absent, and the value of n lies between 2 and 6, the excess of alumina will crystallize wholly as corundum; but if n is greater than 6, sillimanite, or sillimanite and corundum, will form. With magnesia or iron present in an amount above 0.5 per cent, and with $n<6$, spinel is produced, or spinel and corundum together. With $n>6$, the magnesia and the excess of alumina will go to form iolite, or iolite and spinel. In each case the alumina in excess of the ratio $RO : Al_2O_3 :: 1 : 1$ is completely taken up in the formation of the several species named. The balance of the alumina—the normal alumina, so to speak—will obviously appear in other minerals, such as anorthite, nepheline, alkali feldspars, etc., whose nature will depend upon the bases which happen to be associated with it, and also upon the proportion of silica.

Previous to the appearance of Morozewicz's memoir it was commonly supposed, but without good reason, that corundum was not a true pyrogenic mineral. It was best known as occurring with metamorphic rocks, and especially in limestones; and it had been observed as a product of contact action, although rarely.[c] When corundum

[a] Min. pet. Mitth., vol. 18, pp. 22–83, 1898. Also Zeitschr. Kryst. Min., vol. 24, p. 281, 1895.

[b] Cordierite. The name iolite has priority and is given preference by Dana.

[c] K. Busz (Geol. Mag., 1896, p. 492) found corundum in contacts between granite and clay slate on Dartmoor in Devonshire. A. K. Coomâra-Swâmy (Quart. Jour. Geol. Soc., vol. 57, p. 185, 1901) observed it at contacts between granite and micaceous quartzite near Morlaix, France. The corundum was there associated with sillimanite, andalusite, spinel, etc.

was found in igneous rocks it was regarded as derived from accidental inclusions, and not as a primary separation from the magma. The work of Morozewicz modified these beliefs and shed new light upon the problems of petrology. The common association of corundum with spinel, iolite, sillimanite, andalusite, and kyanite at once became significant, and in accordance with the rules developed by Morozewicz.

Pyrogenic corundum, according to A. Lagorio,[a] is found in alumosilicate rocks only when the latter contain over 30 per cent of alumina, and such rocks are rare. Lagorio cites analyses of several examples, and Morozewicz [b] himself describes others. Kyschtymite is an anorthite rock containing up to 59.5 per cent of corundum; a corundum syenite with 18.5 per cent consists largely of orthoclase and albite, and a corundum pegmatite with 35.4 per cent has similar composition. All these rocks are from the Ural Mountains. A corundum anorthosite analogous to kyschtymite has been described by W. G. Miller [c] from Canada; and corundum-bearing nepheline syenites, according to A. P. Coleman,[d] are also found in the same region. In the Coimbatore district, Madras Presidency, India, T. H. Holland [e] found large crystals of corundum in an albite-orthoclase rock near its contact with elæolite syenite. They were associated with chrysoberyl and zinc spinel, zinc oxide and glucina having here played the part usually assigned to magnesia in the commoner magmas. In the Bidwell Bar quadrangle, California, A. C. Lawson[f] found a dike of an oligoclase-corundum rock cutting peridotite.

The solubility of alumina in peridotite magmas—that is, in magmas free from lime and alkalies—seems not to have been experimentally investigated. The corundum of North Carolina and Georgia, however, is associated with rocks of this class, and whether it was derived by fractional crystallization from the olivine rock, dunite, or from contact action with adjacent gneisses is an open question. The latter view, which is that of the earlier writers upon these locali-

[a] Zeitschr. Kryst. Min., vol. 24, p. 285, 1895. This memoir contains abundant literature references upon the occurrence of corundum in igneous rocks.

[b] Min. pet. Mitth., vol. 18, pp. 212, 219, 1898. For present purposes the minor accessory minerals in these rocks may be ignored.

[c] Am. Geologist, vol. 24, p. 276, 1899.

[d] Jour. Geol., vol. 7, p. 437, 1899.

[e] Mem. Geol. Survey, India, vol. 30, pp. 201, 205, 1901. For Indian corundum in general, see Holland, Manual of Geology of India, Economic geology, pt. 1; F. R. Mallet, Rec. Geol. Survey India, vol. 5, p. 20, 1872; vol. 6, p. 43, 1873; and C. S. Middlemiss, idem, vol. 29, p. 39, 1896. Mallet describes beds of corundum in gneiss. A remarkable corundum rock from India is described by J. W. Judd in Mineralog. Mag., vol. 11, p. 56, 1895. For Burmese occurrences, see C. B. Brown and Judd, Proc. Roy. Soc., vol. 57, p. 387, 1895.

[f] Bull. Dept. Geology, Univ. California, vol. 3, p. 219, 1903.

ties, was advocated by T. M. Chatard,[a] but J. H. Pratt[b] argues in favor of a pyrogenic origin. According to Pratt, the corundum crystallized from the fused dunite along the cooler surfaces of contact with the surrounding rocks. In these deposits spinel occurs but rarely. The corundum, emery, and iron spinel of the "Cortlandt series" in New York were regarded by G. H. Williams[c] as segregations in norite.[d]

At Yogo Gulch, in the Little Belt Mountains of Montana, corundum is found in dikes of lamprophyre which contains too little alumina to satisfy the conditions laid down by Morozewicz. The occurrence has been carefully studied by W. H. Weed[e] and L. V. Pirsson,[f] who believe that the corundum was not in this case a constituent of the original magma, but that it has been produced by the action of the latter upon inclosed fragments of clay shale or limestone. This, of course, is a sort of contact action, but its mechanism is not clearly worked out. The thermal decomposition of minerals, especially of silicates, has so far been inadequately studied. Under what natural conditions can alumina be liberated from its silicates? This is a question which demands investigation, but it may be noted here that Vernadsky,[g] by fusing muscovite, obtained sillimanite and corundum. Natural corundum evidently may originate in more than one way, and no single process can account for all of its occurrences.

Notwithstanding the fact that corundum is one of the most refractory of minerals toward aqueous solvents, being insoluble in even the strongest acids, it is not absolutely unalterable by them. S. J. Thugutt[h] found that corundum, upon prolonged heating with water to about 230° in a platinum digester, became appreciably hydrated. The product of the reaction after 336 hours contained 5.14 per cent of combined water. Even at 100° in an open vessel, some hydration occurred. A similar prolonged treatment of corundum with a solu-

---

[a] Bull. U. S. Geol. Survey No. 42, p. 45, 1887. Chatard gives abundant references to literature. See also F. P. King's report upon Georgia corundum (Bull. No. 2, Geol. Survey Georgia, 1894), which contains a bibliography of American publications upon the subject. A similar publication by J. V. Lewis, on North Carolina corundum, forms Bull. No. 11 of the North Carolina Geol. Survey, 1896. Vol. 1 of the North Carolina Geol. Survey, 1905, by Pratt and Lewis, is a valuable monograph on corundum and chromite.

[b] Am. Jour. Sci., 4th ser., vol. 6, p. 49, 1898; vol. 8, p. 227, 1899. In Min. Mag., vol. 12, p. 139, 1899, J. W. Judd and W. E. Hidden have a paper upon North Carolina ruby; also in Am. Jour. Sci., 4th ser., vol. 8, p. 370, 1899.

[c] Am. Jour. Sci., 3d ser., vol. 33, p. 194, 1887.

[d] For an account of the emery mine at Chester, Massachusetts, see B. K. Emerson, Mon. U. S. Geol. Survey, vol. 29, p. 117, 1898. In Bull. U. S. Geol. Survey No. 269, 1906, J. H. Pratt gives a very complete account of the corundum and emery of the United States, together with much information upon foreign localities. For the emery of Naxos, see S. A. Papavasiliu, Geol. Centralbl., vol. 8, p. 99, 1905.

[e] Twentieth Ann. Rept. U. S. Geol. Survey, pt. 3, p. 454, 1900.

[f] Idem, p. 552; Am. Jour. Sci., 4th ser., vol. 4, p. 421, 1897. See also G. F. Kunz, Am. Jour. Sci., 4th ser, vol. 4, p. 417, 1897.

[g] Cited by Morozewicz, Min. pet. Mitth., vol. 18, p. 25, 1898.

[h] *Mineralchemische* Studien, p. 104, Dorpat, 1891.

tion of the silicate $K_2Si_2O_5$ converted it into a substance having the composition of orthoclase, while sodium silicate produced a compound resembling analcite. In nature reactions of this kind are conceivably possible, but they must be very slow; in the laboratory the acceleration due to temperature and pressure accounts for much of the change. However, alterations of corundum are common, and Thugutt's experiments give us some notion of the way in which they were probably effected. By water alone corundum may be transformed into diaspore, $HAlO_2$, which is one of its frequent associates. By further or coincident action of salts dissolved in percolating waters the alteration of corundum can be modified, and a considerable number of other minerals may be produced.[a] Among them gibbsite, spinel, sillimanite, kyanite, andalusite, pyrophyllite, muscovite, paragonite, chloritoid, margarite, zoisite, feldspars, tourmaline, and various vermiculites and chlorites have been recorded.[b] Some of these reported alteration products are doubtless secondary and not due to the direct transformation of corundum, but on this subject there is much uncertainty. The envelopment of one mineral by another does not necessarily establish the derivation of the second from the first. The field observations and the study of natural specimens need to be reenforced by experiments in the laboratory before accurate conclusions concerning the alterations can be drawn.

THE SPINELS.

Spinel.—Isometric. Composition, $MgAl_2O_4$. Molecular weight, 142.5. Specific gravity, 3.5. Molecular volume, 40.7. Usually colored violet, green, or red by impurities. Hardness, 8.

Hercynite.—Isometric. Composition, $FeAl_2O_4$. Molecular weight, 174.1. Specific gravity, 3.93. Molecular volume, 44.3. Color, black. Hardness, 7.5 to 8.

These minerals, together with gahnite, $ZnAl_2O_4$, magnetite, $Fe''Fe'''_2O_4$, magnesioferrite, $MgFe_2O_4$, franklinite, and chromite, form a natural isometric group, in which there are many intermediate mixtures. In the general formula $R''R'''_2O_4$, R'' may be magnesium, ferrous iron, zinc, or manganese; and R''' is represented by aluminum, ferric iron, trivalent manganese, and chromium. In pleonaste we have an intermediate magnesium iron spinel, and in picotite chromium appears. Structurally the formula of spinel is commonly written O=Al—O—Mg—O—Al=O, but this should not be taken as a finality. It is not the only expression possible, nor has its validity been proved.

---

[a] For a discussion of the reactions which are supposed to produce the alterations of corundum, see C. R. Van Hise, Mon. U. S. Geol. Survey, vol. 47, pp. 223-225, 1904.

[b] F. A. Genth, Proc. Am. Phil. Soc., vol. 13, p. 361, 1873; vol. 20, p. 381, 1882; Am. Jour. Sci., 3d ser., vol. 39, p. 47, 1890. These papers are full of details regarding alteration products of corundum.

The following analyses of spinels show the wide variations in their composition:

Analyses of spinels.

A. Rose spinel, Ceylon. Analysis by H. Abich.

B. From Vesuvius. Analysis by H. Abich. Analyses A and B cited from Dana's System of Mineralogy, 6th ed., p. 222.

C. From lherzolite, Auvergne. Analysis by F. Pisani, Compt. Rend., vol. 63, p. 49, 1866.

D. From pyroxenite, Montana. Analysis by L. G. Eakins, Bull. U. S. Geol. Survey No. 220, p. 20, 1903.

E. Pleonaste from near Peekskill, New York. Analysis by C. A. Wolle, Am. Jour. Sci., 2d ser., vol. 48, p. 350, 1869.

F. Hercynite from the Böhmerwald. Analysis by B. Quadrat, Liebig's Annalen, vol. 55, p. 357, 1845.

	A.	B.	C.	D.	E.	F.
Al_2O_3	69.01	67.46	59.06	62.09	60.79	61.17
Cr_2O_3	1.10	.....	.....	2.62	.....	.....
Fe_2O_3	.....	.....	10.72	2.10	5.26	.....
FeO	.71	5.06	13.60	17.56	21.74	35.67
MnO	.....	.....	.....	trace	.....	.....
MgO	26.21	25.94	17.20	15.61	12.84	2.92
CaO	.....	.....	.....	.16	.....	.....
SiO_2	2.02	2.38	.....	.55	.....	.....
	99.05	100.84	100.58	100.69	100.63	99.76

Members of the spinel group have been made artificially by methods which generally recall those mentioned under corundum. For example, S. Meunier[a] fused a mixture of alumina, magnesia, cryolite, and aluminum chloride, and obtained spinel crystals. In another investigation[b] he produced them by heating aluminum chloride and water with metallic magnesium in a sealed tube. These processes, with others which have been described, may perhaps represent in a broad way the pneumatolytic methods of nature. The production of spinel by the fusion of appropriate magmatic mixtures is, however, the process of greatest importance geologically, and some of the conditions attending its formation have been already described under corundum. The details of Morozewicz's experiments need not be repeated here.[c] An interesting emphasis is given to them by the observations of G. Linck,[d] who found, in a German gabbro, spinel associated with sillimanite and corundum.[e]

Spinels are also formed by the breaking down of other minerals, or by the reactions of two or more species upon one another. According to Vernadsky,[f] spinel is among the compounds produced by the fusion of biotite, an observation which has been confirmed by C. Doelter.[g] F. W. Clarke and E. A. Schneider[h] found it to be formed

[a] Compt. Rend., vol. 104, p. 1111, 1887.

[b] Idem, vol. 90, p. 701, 1880.

[c] See also J. H. L. Vogt, Mineralbildung in Schmelzmassen, pp. 189–203.

[d] Sitzungsb. Akad. Berlin, 1893, p. 47.

[e] See also W. Salomon, Zeitschr. Deutsch. geol. Gesell., vol. 42, p. 525, 1890, for spinel in cordierite contact rocks in Italy.

[f] Cited by J. Morozewicz, Min. pet. Mitth., vol. 18, p. 59, 1898.

[g] *Neues* Jahrb., 1897, pt. 1, p. 1.

[h] *Bull. U. S. Geol.* Survey No. 113, p. 30, 1893.

when clinochlore and xanthophyllite were strongly ignited, and Doelter[a] also obtained it by fusing the first-named species. Tourmaline, pyrope, and spessartite also yield spinel among the products of their fusion.[b]

According to Fouqué and Lévy[c] spinel and melanite are formed when nephelite and augite are fused together, and Doelter and Hussak[d] obtained spinel from a mixture of fayalite and sarcolite. M. Vučnik[e] found that a mixture of magnetite and anorthite gave recrystallized anorthite, hercynite, and glass, the magnetite having disappeared. Similar observations with augite-elæolite and corundum-elæolite mixtures were made by B. Vukits.[f]

Spinel, especially pleonaste, is a common accessory mineral in gneisses and in many eruptive rocks. Picotite is more characteristic of the peridotites and the derived serpentines. Spinel is a frequent companion of corundum and also of emery, as at Chester, Massachusetts, and in the norite at Crugers, New York.[g] A number of remarkable spinel rocks from Elba have been described by P. Aloisi.[h] Many of these occurrences are easily interpreted in the light of Morozewicz's experiments. The other experiments, cited above, explain the appearance of spinel as a contact mineral. In many cases it appears in limestones as a product of contact metamorphism. Its alterations seem to have been little studied, but a change into steatite is mentioned in the literature.

Chromite.—Isometric. Normal composition, $FeCr_2O_4$, but with variable replacements of Fe″ by Mg, and of Cr by Al and Fe‴, as in the other members of the spinel group. Specific gravity, 4.32 to 4.57. Color, black. Hardness, 5.5. The following analyses are fairly typical:[i]

Analyses of chromite.

A. From vicinity of Mundorff, British Columbia. Chrompicotite. Analysis by R. A. A. Johnston, for G. C. Hoffmann, Am. Jour. Sci., 4th ser., vol. 13, p. 242, 1902.

B. From Corundum Hill, North Carolina. Analysis by C. Baskerville, for J. H. Pratt, Am. Jour. Sci., 4th ser., vol. 7, p. 281, 1899.

C. From Webster, North Carolina. Analysis by H. W. Foote, for Pratt, loc. cit.

D. From Port au Port Bay, Newfoundland. Analysis by E. Waller, for G. W. Maynard, Trans. Am. Inst. Min. Eng., vol. 27, p. 283, 1897.

---

[a] Neues Jahrb., 1897, pt. 1, p. 1.

[b] Doelter, loc. cit., for tourmaline. C. Doelter and E. Hussak, Neues Jahrb., 1884, pt. 1, p. 157, for garnets.

[c] Synthèse des minéraux et des roches, p. 64.

[d] Neues Jahrb., 1884, pt. 1, p. 157.

[e] Centralbl. Min. Geol. Pal., 1904, p. 297. Criticised by J. Morozewicz in the same journal, 1905, p. 148.

[f] Idem, 1904, pp. 710, 743.

[g] G. H. Williams, Am. Jour. Sci., 3d ser., vol. 33, p. 194, 1887. See also J. H. Pratt, Bull. U. S. Geol. Survey No. 269, p. 34, 1906.

[h] Proc. verb. Soc. tosc. sci. nat., vol. 15, p. 60.

[i] A very complete collection of chromite analyses, down to 1884, with literature references, is given in M. E. Wadsworth's Lithological studies: Mem. Mus. Comp. Zoology, Cambridge, Mass., vol. 11, 1884.

E. From Tampadal, lower Silesia. Analysis by Laszczynski, for H. Traube, Zeitschr. Deutsch. geol. Gesell., vol. 46, p. 50, 1894.

	A.	B.	C.	D.[a]	E.
Cr_2O_3	55.90	57.80	39.95	49.23	41.23
Al_2O_3	13.83	7.82	29.28	7.50	24.58
Fe_2O_3	.....	.....	.....	.....	2.28
FeO	14.64	25.68	13.90	17.21	16.99
MnO	.....	.69	.....	trace	.58
MgO	15.01	5.22	17.31	18.66	14.77
SiO_2	.60	2.80	.....	6.51	.....
	99.98	100.01	100.44	99.11	100.43

[a]Also contains traces of lime, copper, and vanadium.

The earlier syntheses of chromite seem to have little or no geological bearing. S. Meunier,[a] however, who prepared chromite by oxidizing an alloy of iron and chromium, attributes its origin to a similar reaction occurring in nature. He supposes that such an alloy, like platinum and nickel iron, can be brought up from the interior of the earth to be oxidized by vapors when it nears the surface. Unfortunately no such alloy has yet been found in the rocks, and in meteorites chromite itself is a common mineral.

Chromite is essentially a constituent of peridotites and of the serpentines derived from them. It is one of the earliest species formed during the solidification of the magma, and its larger deposits, when it occurs in ore bodies, are now generally ascribed to magmatic differentiation through the action of gravity. J. H. L. Vogt[b] thus interprets the chromite deposits of Norway, and J. H. Pratt[c] has elaborated the same conception with respect to the chromic iron ores of North Carolina. The origin of corundum and of chromite in dunite Pratt explains in the same way. When a peridotite alters to serpentine, the refractory chromite remains unchanged.

Magnetite.—Isometric. Composition, Fe_3O_4, but with variable impurities and replacements. Molecular weight, 231.7. Specific gravity, 5.17. Molecular volume, 44.8. Color, black. Hardness, 5.5 to 6.5. Magnesium, manganese, aluminum, and titanium are common impurities, rutile, ilmenite, hematite, and the spinels being frequent admixtures in magnetite. The titaniferous magnetites form a well-known subclass of ores. In a magnetite from the Tyrolese Alps T. Petersen[d] found 1.76 per cent of nickel oxide, and the magnetites of eastern Ontario may contain half as much.[e]

[a] Compt. Rend., vol. 110, p. 424, 1890.

[b] Zeitschr. prakt. Geol., 1894, p. 384.

[c] Trans. Am. Inst. Min. Eng., vol. 29, p. 17, 1899. For a general review of chromite deposits, see Stelzner-Bergeat, Die Erzlagerstätten, p. 33, 1904. The magmatic view is adopted in this work, and also in Beck's treatise upon ore bodies.

[d] Neues Jahrb., 1867, p. 836.

[e] W. G. Miller, Rept. British Assoc., 1897, p. 600.

Magnetite is often observed as a furnace product, and it forms the "iron scale" of the blacksmith. W. Müller[a] found both magnetite and hematite in crystals, among the oxidation products of the iron-bearing residues from an aniline factory. The mineral has also been produced artificially by several investigators. J. J. Ebelmen[b] prepared it, well crystallized, by fusing together an iron silicate and lime. According to H. Sainte-Claire Deville,[c] ferrous oxide, heated in a stream of hydrochloric acid, forms magnetite, while a mixture of magnesia and ferric oxide, similarly treated, yields magnesioferrite, $MgFe_2O_4$. T. Sidot[d] obtained magnetite by the calcination of ferric oxide alone.

In artificial magmas magnetite is easily formed, especially when the proportion of silica is low. Any excess of iron over that needed to combine with silica is likely to be deposited in the form of magnetite, although the conditions of its appearance are not so simple as in the separation of alumina as corundum.[e] The order of its crystallization, with reference to other minerals, is by no means invariable.

Like the spinels, magnetite may be formed by the breaking down of other species, or by reactions between them. In other words, it may be a product of contact metamorphism. C. Doelter,[f] for example, repeatedly obtained it by fusing various rocks in contact with limestone—a procedure which recalls Ebelmen's experiment. Acmite upon fusion yields magnetite and a glass,[g] and glaucophane gives similarly a mixture in which magnetite appears. By melting together biotite and microcline, Fouqué and Lévy[h] obtained magnetite, leucite, and olivine. J. Lenarčič[i] found magnetite in the mass produced by fusing leucite with augite; but on the other hand, when magnetite and labradorite were taken, the former mineral was dissolved and augite appeared. Similar observations were made by M. Vučnik[j] and B. Vukits,[k] who found magnetite among the fusion products of anorthite and hedenbergite, albite and hedenbergite, olivine and augite, elæolite and augite, and elæolite and diopside. Each of these couples, when fused, yielded magnetite, with other products which varied according to the nature of the mixture.

---

[a] Zeitschr. Deutsch. geol. Gesell., vol. 45, p. 63, 1893.
[b] Compt. Rend., vol. 33, p. 528, 1851.
[c] Idem, vol. 53, p. 199, 1861.
[d] Idem, vol. 69, p. 201, 1869.
[e] See J. Morozewicz, Min. pet. Mitth., vol. 13, p. 84, 1898, and J. H. L. Vogt, Mineralbildung in Schmelzmassen, pp. 203–212.
[f] Neues Jahrb., 1886, pt. 1, p. 128.
[g] Doelter, Neues Jahrb., 1897, pt. 1, p. 1. See also M. Vučnik, cited below.
[h] Synthèse des minéraux et des roches, p. 77.
[i] Centralbl. Min. Geol. Pal., 1903, pp. 705, 743.
[j] Idem, 1904, pp. 300, 342, 344, 345, 366, 369.
[k] Idem, 1904, pp. 705, 715, 743, 748.

Magnetite occurs as an accessory mineral in rocks of all classes, and it sometimes rises to the rank of a principal constituent, or even forms rock masses by itself. It is obviously most abundant in rocks rich in ferromagnesian minerals, such as norites, diabases, gabbros, or peridotites; but it is also associated with nepheline rocks and anorthites. In many cases it forms large ore bodies that are regarded as products of magmatic differentiation; and these deposits, as a rule, are highly titaniferous.[a] Some ores shade from magnetite into ilmenite, with over 40 per cent of titanic oxide. They frequently contain spinel, and sometimes, also, corundum.

In the great iron deposits of the Lake Superior region, and the adjacent parts of Michigan, Wisconsin, and Minnesota, magnetite is found in slates and cherts, often associated with grünerite and actinolite.[b] Here the mineral is not of direct igneous origin. In the Mesabi district, according to C. K. Leith,[c] it is derived from the leaching of a hydrous iron silicate, of uncertain composition, to which he has given the name "greenalite." Other silicates may yield magnetite through metamorphic changes, and it can also form, says C. R. Van Hise,[d] from marcasite and pyrite, and from the oxidation of siderite in situ. By further oxidation magnetite can alter to hematite and limonite, and through the agency of carbonated waters it may be transformed into siderite again.

HEMATITE.

Rhombohedral. Composition, Fe_2O_3. Molecular weight, 159.8. Specific gravity, 5.2. Molecular volume, 30.7. Color, red to steel-gray and black. Hardness, 5.5 to 6.5. Hematite has been prepared artificially by several methods. In the classical experiment of Gay-Lussac,[e] the vapor of ferric chloride was decomposed by steam at a high temperature, and crystals of hematite were formed. A. Daubrée[f] obtained it by passing ferric chloride vapor over lime; and H. Sainte-Claire Deville[g] prepared the specular variety by the slow

[a] See J. H. L. Vogt, Zeitschr. prakt. Geol., 1893, p. 6; 1894, p. 382; 1900, pp. 234, 370; 1901, pp. 9, 180, 289, 327. J. F. Kemp, Nineteenth Ann. Rept. U. S. Geol. Survey, pt. 3, p. 377, 1899; School of Mines Quart., vol. 20, p. 323, 1899; vol. 21, p. 56, 1900; Zeitschr. prakt. Geol., 1905, p. 71. W. Lindgren, Science, vol. 16, p. 984, 1902. G. H. Williams, Am. Jour. Sci., 3d ser., vol. 33, p. 194, 1887. R. Beck, Lehre von den Erzlagerstätten, 2d ed., pp. 20–30. Kemp's paper in the School of Mines Quarterly is a general review of the titaniferous magnetites, with many analyses and copious references to other literature. In Zeitschr. prakt. Geol., 1907, p. 86, Vogt describes magmatic iron ores in granite. On magmatic iron ores in Utah, see E. P. Jennings, Trans. Am. Inst. Min. Eng., vol. 35, p. 338, 1905. On the magmatic magnetites of Lapland, see O. Stutzer, Neues Jahrb., Beil. Bd. 24, p. 548, 1907.

[b] See C. R. Van Hise, W. S. Bayley, H. L. Smyth, and J. M. Clements, in Mon. U. S. Geol. Survey, vol. 28, 1897; vol. 36, 1899; and vol. 45, 1903.

[c] Mon. U. S. Geol. Survey, vol. 43, pp. 101–115, 1903.

[d] A treatise on metamorphism: Mon. U. S. Geol. Survey, vol. 47, p. 229, 1904.

[e] See R. Brauns, Chemische Mineralogie, p. 231, 1896.

[f] Compt. Rend., vol. 39, p. 135, 1854.

[g] Idem, vol. 52, p. 1264, 1861.

action of gaseous hydrochloric acid upon ferric oxide at a red heat. Hematite is also produced, according to H. Arctowski,[a] by the action of vaporized ammonium chloride upon either red-hot iron or ferric oxide. It has also been noted as a sublimation product in the salt-cake furnaces of certain chemical works.[b] Fine crystals of hematite, grouped in rosettes, have been formed in the iron heating pipes of a Deacon chlorine apparatus in Philadelphia. Some of the crystals were as much as 3 centimeters in diameter. Their formation was due to the action of heated air and the sulphur gases from the fuel upon the iron.[c] Ferric chloride or sulphate was probably first formed and then transformed into hematite by aqueous vapor. All these reactions are analogous to, if not identical with, those that produce the so-called "sublimed" hematite which is seen upon volcanic lavas. A. Arzruni,[d] on comparing the volcanic mineral with the artificial product, found them to be crystallographically identical. W. Bruhns's experiment,[e] in which hematite was formed by heating amorphous ferric oxide with water and a trace of ammonium fluoride to 300° in a platinum tube, seems to be less closely related to geological phenomena.

Fouqué and Lévy[f] repeatedly obtained hematite from artificial magmas, and similar observations have been made by others. In ordinary furnace slags, however, according to J. H. L. Vogt,[g] hematite rarely if ever occurs. Ferric oxide can crystallize out as hematite only when ferrous compounds are either absent or present in quite subordinate amounts, for ferrous oxide unites with it to form magnetite. The latter species, therefore, is characteristic of rocks rich in ferromagnesian minerals, while hematite appears chiefly in the more siliceous and feldspathic granites, syenites, trachytes, rhyolites, andesites, and phonolites. It is also found in the crystalline schists; but magnetite is by far the more common as a pyrogenic mineral. In igneous rocks generally ferrous oxide exceeds the ferric in amount, the average percentages, as shown by 961 analyses,[h] being 3.46 FeO and 2.63 Fe_2O_3. This preponderance of the lower oxide seems to determine the frequent formation of magnetite. The ferric pyrite and the ferrous pyrrhotite appear to follow the same rule of association, the one being commonest in highly silicic rocks, the other accompanying the ferromagnesian minerals.

---

[a] Zeitschr. anorg. Chemie, vol. 6, p. 377, 1894; Bull. Acad. Belg., 3d ser., vol. 27, p. 933.

[b] See H. Vater, Zeitschr. Kryst. Min., vol. 10, p. 391, 1885; and B. Doss, idem, vol. 20, p. 566, 1892.

[c] Personal communication from Prof. C. E. Munroe.

[d] Zeitschr. Kryst. Min., vol. 18, p. 46, 1891.

[e] Neues Jahrb., 1889, pt. 2, p. 62.

[f] Synthèse des minéraux et des roches, p. 236.

[g] Mineralbildung in Schmelzmassen, pp. 215–217. Cf. also J. Morozewicz, Min. pet. Mitth., vol. 18, p. 84, 1898.

[h] Bull. U. S. Geol. Survey No. 228, p. 17, 1904.

Hematite alters into limonite, magnetite, pyrite, marcasite, and siderite,[a] and in metamorphic rocks it may be derived from the same species. Limonite, siderite, and magnetite are especially liable to yield it. The derivation of hematite from silicates is probably always indirect, one or another of the above-named species having been formed first. Titanium is a common impurity in hematite, and L. J. Igelström,[b] in a Swedish ore, found molybdenum in very appreciable amounts.

TITANIUM MINERALS.

Ilmenite.—Rhombohedral. Composition, $FeTiO_3$. Molecular weight, 152. Specific gravity, 4.5 to 5. Molecular volume, 30.4. Color, black; luster, submetallic. Hardness, 5 to 6.

Ilmenite, menaccanite, or titanic iron has been little investigated upon the synthetic side. W. Bruhns[c] prepared it, mixed with some magnetite, by heating finely divided metallic iron, ferric oxide, and amorphous titanic oxide with hydrochloric acid in a platinum tube to 270–300°. In nature, however, it is found most widely diffused. It occurs with or replacing hematite in granite and syenites and as an essential constituent in diorite, diabase, gabbro, basalt, etc., often with magnetite.[d] In these rocks it is one of the earliest minerals to separate. It is also found in metamorphic rocks, such as gneiss, mica schist, and amphibolite. A. von Lasaulx[e] describes ilmenite as an alteration derivative of rutile.

The constitution of ilmenite has been much discussed. Some authorities have regarded it as an isomorphous mixture of Fe_2O_3 and Ti_2O_3; but C. Friedel and J. Guérin,[f] who prepared the latter compound artificially, do not favor this view. Ti_2O_3 as such has not been found as an independent mineral. T. König and O. von der Pfordten[g] made various attempts to detect Ti_2O_3 in ilmenite and only met with failure. Since the mineral pyrophanite, $MnTiO_3$, isomorphous with ilmenite, is known, and since, as S. L. Penfield and H. W. Foote[h] have shown, ilmenite sometimes contains large admixtures of the molecule $MgTiO_3$, the formula $FeTiO_3$ may now be regarded as established for titanic iron. In an ilmenite from Warwick, New York, Penfield and Foote found 16 per cent of magnesia. In fact, the compound $MgTiO_3$ is independently represented by the mineral geikie-

[a] C. R. Van Hise, Treatise on metamorphism: Mon. U. S. Geol. Survey, vol. 47, p. 226, 1904.

[b] Zeitschr. Kryst. Min., vol. 25, p. 94, 1896.

[c] Neues Jahrb., 1889, pt. 2, p. 65.

[d] See the papers of Vogt, Kemp, and others cited under magnetite. The titaniferous magnetites are mixtures of that species with ilmenite. See also A. Cathrein, Zeitschr. Kryst. Min., vol. 8, p. 321, 1884.

[e] Zeitschr. Kryst. Min., vol. 8, p. 54, 1884.

[f] Ann. chim. phys., 5th ser., vol. 8, p. 38, 1876.

[g] Ber. Deutsch. chem. Gesell., vol. 22, p. 1485, 1889.

[h] Am. Jour. Sci., 4th ser., vol. 4, p. 108, 1897.

lite[a] from Ceylon. An excess of iron in ilmenite may be due to admixed hematite and an excess of titanium to rutile.

Ilmenite is often surrounded by a margin of white or even reddish alteration products, which is commonly known by the name of leucoxene. According to A. Cathrein,[b] this substance is essentially titanite, sometimes accompanied by rutile.

Pseudobrookite.—Orthorhombic. Composition, ferric orthotitanate, $Fe_4(TiO_4)_3$. Molecular weight, 559.9. Specific gravity, 4.39. Molecular volume, 127.5. Color, dark brown to black. Hardness, 6.

Pseudobrookite is a rare accessory mineral in certain eruptive rocks, such as andesite, trachyte, basalt, and nephelinite. A similar mineral, formed by "sublimation" in a salt-cake furnace, was described by B. Doss,[c] who gave it the formula Fe_2TiO_5 and made it ismorphous with andalusite, Al_2SiO_5. The natural mineral, however, has the orthotitanate formula, as given above.[d]

Perofskite.—Isometric or pseudoisometric. Composition, calcium titanate, $CaTiO_3$. Molecular weight, 136.2. Specific gravity, 4. Molecular volume, 34. Color, yellow, ranging through orange and brown to grayish black. Hardness, 5.5.

Perofskite has been prepared synthetically by several chemists. J. J. Ebelmen[e] obtained it by fusing titanic oxide with lime and potassium carbonate; and later[f] by the action of lime on an alkaline melt containing titanic oxide and silica. P. Hautefeuille[g] heated a mixture of calcium chloride, titanic oxide, and silica to redness in a stream of moist carbon dioxide, or of hydrochloric acid, and obtained perofskite crystals. L. Bourgeois[h] observed its deposition from various fused mixtures resembling natural magmas in composition. Finally, P. J. Holmquist[i] prepared perofskite by fusing together sodium carbonate, calcium carbonate, and titanic oxide, under special manipulative conditions.

Perofskite occurs both in eruptive and metamorphic rocks. It is found in melilite, leucite, and nepheline rocks, and in some peridotites;[j] and is among the earliest secretions. It is particularly charac-

[a] A recent description of geikielite by T. Crook and B. M. Jones is printed in Mineralog. Mag., vol. 14, p. 160, 1906.

[b] Zeitschr. Kryst. Min., vol. 6, p. 244, 1882.

[c] Idem, vol. 20, p. 566, 1892. Doss gives a good bibliography of pseudobrookite.

[d] Established by A. Frenzel, Min. pet. Mitth., vol. 14, p. 121; confirming the earlier analyses of A. Koch, G. Lattermann, and A. Cedarström. See E. S. Dana, System of Mineralogy, 6th ed., p. 232.

[e] Compt. Rend., vol. 32, p. 710, 1851.

[f] Idem, vol. 33, p. 528, 1851.

[g] Ann. chim. phys., 4th ser., vol. 4, p. 163, 1865.

[h] Idem, 5th ser., vol. 29, p. 479, 1883.

[i] Bull. Geol. Inst. Upsala, vol. 3, p. 181, 1896–97.

[j] See G. H. Williams, Am. Jour. Sci., 3d ser., vol. 34, 1887, p. 137; J. S. Diller, idem, vol. 37, p. 219, 1889.

teristic of melilite basalt, being, according to A. Stelzner,[a] the most faithful companion of melilite. At Catalão, Brazil, E. Hussak[b] found a peculiar rock consisting of magnetite and perofskite; a titaniferous magnetite of a new kind. The mineral is also found in chlorite schist, limestone, quartz gneiss,[c] etc. Hussak observed its alteration into titanic oxide, and K. Schneider[d] has described perofskite as derived from titanite.

Titanite.—Monoclinic. Composition, $CaTiSiO_5$. Molecular weight, 196.5. Specific gravity, 3.54. Molecular volume, 55.5. Color, yellow, green, red, gray, brown, or black. Hardness, 5 to 5.5.

Titanite, or sphene, has been produced artificially by several experimenters, but it does not seem to be easily formed. P. Hautefeuille[e] prepared it by fusing a mixture of silica and titanic oxide with calcium chloride. L. Bourgeois[f] obtained it, but obscurely developed, by fusing together its constituent oxides, silica, titanic oxide, and lime. L. Michel[g] fused ilmenite with calcium sulphide, silica, and carbon, which yielded a mixture of titanite, garnet, and a subsulphide of iron.

As a pyrogenic mineral titanite is found among the oldest secretions in the more siliceous rocks, such as granites, diorites, syenites, and trachyte. It is abundant in phonolites and elæolite syenites, and is also common as a secondary mineral, derived by alteration from rutile or ilmenite. It is often associated with chlorite. At Green River, North Carolina, large crystals of sphene are found completely or partially altered into a yellow, friable, earthy substance which has been given the name of xanthitane. According to L. G. Eakins[h] this product is a hydrous titanate of aluminum. An alteration of titanite into rutile has been observed by P. Mann[i] in the foyaite of the Serra de Monchique; and B. Doss[j] has reported pseudomorphs of anatase after sphene.

Rutile.—Tetragonal. Composition, TiO_2. Molecular weight, 80.1. Specific gravity, 4.2. Molecular volume, 19.1. Color, commonly reddish to brown or black. Hardness, 6 to 6.5.

Brookite.—Orthorhombic. Composition and molecular weight as for rutile. Specific gravity, 4. Molecular volume, 20. Color, yellowish, reddish, brown, or iron-black. Hardness, 5.5 to 6.

Octahedrite or anatase.—Tetragonal. Composition and molecular weight the same as for rutile and brookite. Specific gravity, 3.82 to

---

[a] Neues Jahrb., Beil. Bd. 2, p. 390, 1883.
[b] Neues Jahrb., 1894, pt. 2, p. 297.
[c] See O. Mügge, Neues Jahrb., Beil. Bd. 4, p. 581, 1886.
[d] Neues Jahrb., 1889, pt. 1, p. 99.
[e] Ann. chim. phys., 4th ser., vol. 4, p. 129, 1865.
[f] Idem, 5th ser., vol. 29, p. 474, 1883.
[g] Compt. Rend., vol. 115, p. 830, 1892.
[h] Bull. U. S. Geol. Survey No. 60, p. 135, 1890.
[i] Neues Jahrb., 1882, pt. 2, p. 200.
[j] Idem, 1895, pt. 1, p. 128.

3.95. Molecular volume, 20.5. Color, brown, indigo-blue, and black. Hardness, 5.5 to 6.

All three modifications of titanic oxide have been studied synthetically. Crystals of brookite were obtained by A. Daubrée,[a] by the action of aqueous vapor upon titanic chloride at a red heat. By heating amorphous titanic oxide to redness in a current of hydrochloric acid gas, H. Sainte-Claire Deville and H. Caron [b] transformed it into a crystalline modification, and similar results were obtained by P. Hautefeuille and A. Perrey.[c] By the prolonged heating of titanic oxide with boric acid J. J. Ebelmen [d] obtained rutile, and P. Hautefeuille [e] attained the same end when sodium tungstate or vanadate was used as flux. H. Traube [f] also crystallized rutile from fused sodium tungstate, and was able to add to it appreciable quantities of iron, manganese, and chromium, impurities which are found in the natural mineral. Several investigators have prepared rutile by the same general process, using microcosmic salt as the solvent. B. Doss,[g] by this method, prepared both rutile and anatase. Deville and Caron [h] also prepared rutile by heating titanic oxide with silica and oxide of tin to redness. By heating ilmenite and pyrite together at about 1,200°, L. Michel [i] obtained a mixture of rutile and pyrrhotite.

The three forms of titanic oxide were reproduced by P. Hautefeuille [j] by various modifications of the same general pneumatolytic process. Potassium titanate and calcium chloride were heated in a current of hydrochloric acid mixed with air, and crystals were formed. Titanic oxide with potassium or calcium fluoride, or potassium silicofluoride, similarly treated, gave the same products, which, when the operation was conducted at a strong red heat, was rutile. Brookite was formed by heating potassium titanofluoride in aqueous vapor, and by the action of hydrofluoric acid upon titanic chloride, at a temperature not higher than the boiling point of zinc. A mixture of titanic oxide, calcium fluoride, and potassium chloride, heated in a stream of hydrochloric acid, silicon fluoride, and moist hydrogen, also gave brookite, and so did titanic oxide, silica, and potassium silicofluoride in a current of hydrochloric acid alone. When titanic fluoride was decomposed by aqueous vapor at a lower temperature, at or near the boiling point of cadmium, octahedrite was produced.

[a] Compt. Rend., vol. 29, p. 227, 1849.
[b] Idem, vol. 53, p. 161, 1861.
[c] Idem, vol. 110, p. 1038, 1890.
[d] Idem, vol. 32, p. 330, 1851.
[e] Cited by Bourgeois, Reproduction artificielle des minéraux, p. 85, 1884.
[f] Neues Jahrb., Beil. Bd. 10, p. 470, 1895–96.
[g] Idem, 1894, pt. 2, p. 147.
[h] Compt. Rend., vol. 53, p. 161, 1861.
[i] Idem, vol. 115, p. 1020, 1892.
[j] Ann. chim. phys., 4th ser., vol. 4, p. 129, 1865.

How far these experiments may parallel the pneumatolytic processes of nature is doubtful; but they show that rutile, the most stable modification of titanic oxide, is formed at the highest temperatures, brookite at temperatures considerably lower, and anatase at a point still lower in the scale. These observations are in harmony with the known occurrences of the three species as rock-forming minerals.

Rutile occurs as a pyrogenic mineral in eruptive rocks, but it is more common in gneiss, mica schist, and the phyllites. In a hornblende gneiss from Freiberg, A. Bergeat [a] observed rutile, ilmenite, and titanite, which had formed as a single generation, and crystallized before the biotite. Rutile is also found as a secondary mineral, derived from ilmenite and titanite. C. Doelter [b] found rutile to be slightly soluble in water, and more so in a solution of sodium fluoride. From such a solution, containing rutile, after heating to 145° during thirty-four days, the mineral was partially recrystallized. Possibly some secondary rutile may originate from solution of the original substance, or of titanic oxide leached from another species.

Brookite is not found in fresh eruptive rocks, but generally in decomposed granite, gneiss, quartz porphyry, and the sedimentaries. Octahedrite is never primary, but is formed by the alteration of other titanium minerals. It has been observed under a great variety of conditions, as in granite, diabase, quartz porphyry, diorite, the crystalline schists, shales, sandstones, and limestones.[c]

Brookite alters into rutile, and rutile into ilmenite, anatase, and sphene. The titanium minerals are thus closely connected with one another, and transformations are possible in almost every direction. From a magma deficient in lime and iron, titanic oxide may separate as rutile; when lime is abundant, titanite or perofskite may form; in presence of much iron ilmenite or pseudobrookite will be deposited. Brookite and octahedrite appear only as secondary minerals.

CASSITERITE AND ZIRCON.

Cassiterite.—Tetragonal. Composition, stannic oxide, SnO_2. Molecular weight, 151. Specific gravity, 6.9. Molecular volume, 21.9. Color, commonly brown to black, rarely colorless, red, or yellow. Hardness, 6 to 7.

A. Daubrée [d] prepared cassiterite by the action of aqueous vapor upon tin tetrachloride in a red-hot porcelain tube. H. Sainte-Claire Deville [e] obtained it by passing gaseous hydrochloric acid over the

[a] Neues Jahrb., 1895, pt. 1, p. 232.

[b] Min. pet. Mitth., vol. 11, p. 325, 1890.

[c] For a very full summary of the occurrence of zircon and the titanium minerals, especially brookite and anatase, see H. Thürach, Verhandl. Phys. med. Gesell. Würzburg, vol. 18, No. 10, 1884. On the rutile of Nelson County, Virginia, see T. L. Watson, Econ. Geol., vol. 2, p. 493, 1907.

[d] Compt. Rend., vol. 29, p. 227, 1849.

[e] *Idem*, vol. 53, p. 161, 1861.

amorphous oxide of tin at a high temperature, and also by acting upon stannous chloride with aqueous vapor. According to A. Ditte,[a] stannic oxide may be crystallized by fusion with calcium chloride; and its crystallization is mentioned by Deville and H. Caron[b] as having been effected by heating a fluoride of tin with boric oxide. The formation of cassiterite as a furnace product has several times been observed, most recently by A. Arzruni[c] and J. H. L. Vogt.[d] In this case it was produced during the manufacture of pulverulent stannic oxide, by the slow oxidation of metallic tin. With this exception, the syntheses of cassiterite point to its origin as a pneumatolytic mineral, and its commoner associations tell a similar story. It is almost invariably accompanied by minerals containing boric oxide or fluorine, such as topaz, tourmaline, lepidolite, and apatite.[e]

Cassiterite is rarely found as an original rock-forming mineral. M. von Miklucho-Maclay[f] has reported it accompanied by rutile, topaz, apatite, and tourmaline, as an inclusion in the mica of a granite. According to R. Beck,[g] it is also an original constituent of granite on the islands of Banca and Billiton. It also occurs, but sparingly, in the lithia-bearing pegmatites of Maine and California, and, according to L. C. Graton,[h] as an original constituent of pegmatite in the Carolinas. The relations of cassiterite as a vein mineral will be considered in another connection later.

Zircon.—Tetragonal. Composition, zirconium orthosilicate, $ZrSiO_4$. Molecular weight, 183. Specific gravity, 4.6 to 4.8. Molecular volume, 38.7. Color, commonly brown, but also colorless, yellow, red, bluish, green, etc. Hardness, 7.5.

Zircon has been repeatedly produced synthetically. H. Sainte-Claire Deville and H. Caron[i] obtained it by heating zirconia in a current of silicon fluoride. Deville[j] also prepared it by heating zirconia with quartz in the same gas. In the latter process, which is identical in character with the former, zirconium fluoride is formed, which reacts upon the quartz, regenerating the silicon fluoride. A small quantity of the latter substance may therefore generate an indefinite amount of zircon. P. Hautefeuille and A. Perrey[k] obtained zircon when a mixture of silica, zirconia, and lithium molybdate was heated to 800°. Finally, K. Chrustschoff[l] effected the synthesis of

[a] Compt. Rend., vol. 96, p. 701, 1883.
[b] Idem, vol. 46, p. 766, 1858.
[c] Zeitschr. Kryst. Min., vol. 25, p. 467, 1896.
[d] Idem, vol. 31, p. 279.
[e] For a list of the minerals occurring with cassiterite, see W. Kohlmann, Zeitschr. Kryst. Min., vol. 24, p. 350, 1895.
[f] Neues Jahrb., 1885, pt. 2, p. 88.
[g] Zeitschr. Kryst. Min., vol. 33, p. 205, 1900.
[h] Bull. U. S. Geol. Survey No. 293, 1906.
[i] Compt. Rend., vol. 46, p. 764, 1858.
[j] Idem, vol. 52, p. 780, 1861.
[k] Idem, vol. 107, p. 1000, 1888.
[l] Neues Jahrb., 1892, *pt. 2, p. 232.*

zircon by heating gelatinous silica and gelatinous zirconia together, under pressure, to a temperature near redness. Deville's work indicates a possible pneumatolytic origin for zircon in some instances; the other processes seem to be unrelated to the ordinary occurrences of the mineral.

Zircon is one of the commonest accessory constituents in all classes of igneous rocks. It is especially common in the more silicic species, such as granite, syenite, diorite, etc., and in all the younger eruptives. It is very characteristic of the nepheline syenites.[a] It is one of the earliest minerals to crystallize from the cooling magmas, and the first one among the silicates. With or in place of zircon some more complex silicates, such as the zircon pyroxenes, may form. These substances, however, are exceedingly rare and quite imperfectly known.

PHOSPHATES.

Apatite.—Hexagonal. Composition variable, two compounds being included in the species.[b] They are $Ca_5(PO_4)_3F$ and $Ca_5(PO_4)_3Cl$. Molecular weight, 504.5 for fluorapatite and 521 for chlorapatite. Specific gravity, 3.17 to 3.23. Molecular volume, 159.1 to 161.6. Color, white, green, blue, red, yellow, gray, or brown. Hardness, 5.

The first synthesis of apatite was effected by A. Daubrée,[c] who obtained it in crystals by passing the vapor of phosphorus trichloride over red-hot lime. N. S. Manross[d] fused sodium phosphate either with calcium chloride, calcium fluoride, or both together, and so obtained chlorapatite, fluorapatite, or a mixture of the two, resembling natural apatite, at will. This process, slightly modified, was also adopted by H. Briegleb[e] successfully. G. Forchhammer[f] prepared chlorapatite by fusing calcium phosphate with sodium chloride. When bone ash or marl was used instead of the artificial calcium phosphate, a mixed apatite was formed. Similar results were reported by Deville and Caron,[g] who fused bone ash with ammonium chloride and either calcium chloride or fluoride, and also by A. Ditte,[h] who repeated Forchhammer's experiment. By heating calcium phosphate with calcium chloride and water, under pressure, at 250°, H. Debray[i] prepared chlorapatite. E. Weinschenk[j] also produced it by heating

[a] For an elaborate discussion of the natural occurrences of zircon, see H. Thürach, Verhandl. Phys. med. Gesell. Würzburg, vol. 18, No. 10, 1884. For zircon in the augite syenites of Norway, see W. C. Brögger, Zeitschr. Kryst. Min., vol. 16, p. 101, 1890.

[b] For complete analyses of apatite, with a discussion of its variations, see J. A. Voelcker, Ber. Deutsch. chem. Gesell., vol. 16, p. 2460, 1883. For manganese, magnesium, cerium, etc., in apatite, see E. S. Dana, System of Mineralogy, 6th ed., pp. 764, 765.

[c] Compt. Rend., vol. 32, p. 625, 1851.

[d] Liebig's Annalen, vol. 82, p. 353, 1852.

[e] Idem, vol. 97, p. 95, 1856.

[f] Idem, vol. 90, pp. 77, 322, 1854.

[g] Compt. Rend., vol. 47, p. 985, 1858.

[h] Idem, vol. 94, p. 1592, 1882.

[i] *Idem, vol. 52, p. 44, 1861.*

[j] *Zeitschr. Kryst. Min.*, vol. 17, p. 489, 1890.

calcium chloride, ammonium phosphate, and ammonium chloride at temperatures of 150° to 180° in a sealed tube. Apatite has been reported as present in lead-furnace slags by W. M. Hutchins[a] and J. H. L. Vogt.[b] The composition of these slag products, however, seems not to have been verified by analysis.

Apatite is found in all classes of rocks—igneous, metamorphic, and sedimentary. In the eruptives it appears as one of the oldest secretions from the magma. It is more common in femic rocks than in the more siliceous varieties. Titaniferous magnetites, like those of Norway and the Adirondacks, often contain apatite in large amounts. Apatite also appears as an important vein mineral; and in these occurrences Vogt[c] regards it as having been formed by pneumatolytic agencies. According to R. Müller,[d] apatite is strongly attacked by waters containing carbonic acid. Both lime and phosphoric acid pass into solution. A carbonated mineral allied to apatite has lately been described by W. Tschirwinsky,[e] under the name podolite. Its composition is represented by the formula $3Ca_3P_2O_8.CaCO_3$, which is that of apatite with calcium fluoride replaced by calcium carbonate.

Monazite.—Monoclinic. Composition, normally, cerium phosphate, $CePO_4$, but other rare-earth metals are always present, replacing cerium. Molecular weight, 235.25. Specific gravity, 5. Molecular volume, 47. Color, yellow, reddish, and brown. Hardness, 5 to 5.5.

Xenotime.—Tetragonal. Composition, yttrium phosphate, YPO_4. Molecular weight, 189. Specific gravity, 4.5. Molecular volume, 42. Color, grayish white, yellowish, reddish, and commonly brown. Hardness, 4 to 5.

Both monazite and xenotime have been prepared artificially by F. Radominsky,[f] who fused the amorphous phosphates of cerium or yttrium with the corresponding chlorides. This process, however, sheds no light upon their genesis in nature.

According to O. A. Derby,[g] these two species, although they occur sparingly, are very common accessory minerals in Brazilian granites and gneisses. The monazite is principally found associated with zircon, in residues from granite, syenite, and gneiss, but not in diabase, diorite, or minette. Xenotime is a fairly constant accessory in muscovite granite. It was also found in a biotite gneiss, but was absent from phonolites and the nepheline or augite syenites. O. A. Derby[h] also reported a titaniferous magnetite from Brazil, which

[a] Nature, vol. 36, p. 460, 1887.
[b] Mineralbildung in Schmelzmassen, p. 263.
[c] See his paper in Trans. Am. Inst. Min. Eng., vol. 31, p. 134, 1901, and also papers in Zeitschr. prakt. Geol., 1894, p. 458; 1895, pp. 367, 444, 465.
[d] Jahrb. K.-k. geol. Reichsanstalt, vol. 27, Min. pet. Mitth., p. 25, 1877.
[e] Centralbl. Min. Geol. Pal., 1907, p. 279.
[f] Compt. Rend., vol. 80, p. 304, 1875.
[g] Am. Jour. Sci., 3d ser., vol. 37, p. 109, 1889; vol. 41, p. 308, 1891.
[h] Idem, 4th ser., vol. 13, p. 211, 1902.

contained monazite, and still another association of monazite with graphite. On examining a number of granites and gneisses from New England, Derby[a] found several occurrences of monazite, and one of xenotime. W. Ramsay and A. Illiacus[b] also report the presence of monazite in the pegmatites of Finland. W. E. Hidden[c] found crystals of xenotime, intergrown with zircon, in a decomposing granite in Henderson County, North Carolina.

Although it is an inconspicuous mineral in rocks, monazite sometimes accumulates in large quantities in residual sands, which, as a source of the rare earths, have important commercial value. The Brazilian monazite sands are described by E. Hussak and J. Reitinger,[d] who give very complete analyses of several samples. In North Carolina[e] the sands are derived from gneiss, and W. Lindgren[f] reports sands of granitic origin from the Idaho Basin, Idaho.

QUARTZ, TRIDYMITE, AND OPAL.

Quartz.—Rhombohedral. Composition, silicon dioxide, SiO_2. Molecular weight, 60.4. Specific gravity, 2.65. Molecular volume, 22.8. Colorless when pure, but often tinted yellow, violet, red, blue, green, brown, or black. Hardness, 7.

Tridymite.—Hexagonal. Composition like quartz, SiO_2. Specific gravity, 2.3. Molecular volume, 26.3. Colorless or white. Hardness, 7. Fuses at about 1,600°.

The fused silica forms a glass, which can be worked into flasks, crucibles, beakers, etc., for chemical uses. Quartz, furthermore, is distinctly volatile at high temperatures, as was shown in a previous chapter.[g]

Opal.—Amorphous silica, carrying a variable amount of water (from 2 to 13 per cent). Color, white, yellow, red, brown, green, blue, or gray. Specific gravity, 1.9 to 2.3. Hardness, 5.5 to 6.5.

Free silica occurs in nature in many forms, quartz and opal being peculiarly variable species. Chalcedony, jasper, agate, flint, and other similar minerals are commonly regarded as cryptocrystalline

---

[a] Proc. Rochester Acad. Sci., vol. 1, p. 198, 1891.

[b] Zeitschr. Kryst. Min., vol. 31, p. 317, 1899.

[c] Am. Jour. Sci., 3d ser., vol. 36, p. 380, 1888.

[d] Zeitschr. Kryst. Min., vol. 37, p. 550, 1903. Another memoir on the Brazilian sands, by A. Lisboa, appears in Ann. Escola de Minas, No. 6, Ouro Preto, 1903.

[e] See report on monazite by H. B. C. Nitze, Sixteenth Ann. Rept. U. S. Geol. Survey, pt. 4, p. 667, 1895. This memoir contains a valuable bibliography. Another general paper upon monazite, thorite, and zircon, by P. Truchot, may be found in the Revue gén. sci., vol. 9, p. 145, 1898, and, translated into English, in Chem. News, vol. 77, pp. 135, 145.

[f] Am. Jour. Sci., 4th ser., vol. 4, p. 63, 1897. Also in Eighteenth Ann. Rept. U. S. Geol. Survey, pt. 3, p. 677, 1898. On monazite sand in Queensland, see Bull. Imperial Inst., vol. 3, p. 233, 1905; and in the Malay Peninsula, idem, vol. 4, p. 301, 1906.

[g] See also A. L. Day and E. S. Shepherd on quartz glass, in Science, vol. 23, p. 670, 1906. They found that quartz began to vaporize rapidly at about the temperature of melting platinum—that is, between 1,700° and 1,750°.

quartz and often contain admixtures of amorphous or soluble silica,[a] with other impurities.

The different modifications of silica are readily prepared by simple laboratory methods. When an orthosilicate is decomposed by a strong acid, gelatinous silica is formed, which, upon drying, becomes an amorphous mass essentially identical with opal.[b] The siliceous sinters deposited by hot springs are all classed as opal. At the hot springs of Plombières, in France, common opal and hyalite have been formed by the action of the waters upon an ancient Roman cement.[c] The precious opal, which fills seams and cavities in igneous rocks, such as trachyte, was probably formed by the action of hot, magmatic water upon the silicates, the latter being first decomposed and the liberated silica being deposited in the hydrous form.

On the artificial production of quartz and tridymite there have been many researches. P. Schafhaütl[d] simply heated a solution of colloidal silica in a Papin digester, and obtained a crystalline deposit of quartz. H. de Senarmont[e] heated gelatinous silica with water and carbonic acid, sometimes also with hydrochloric acid, at temperatures of from 200° to 300°, with similar results. A. Daubrée[f] produced quartz, together with various silicates, by the action of silicon chloride at high temperatures upon lime, magnesia, glucina, or alumina. He also obtained quartz by heating water to a temperature below redness in a sealed glass tube;[g] and he furthermore observed its deposition from the waters of Plombières.[h] To K. Chrustschoff[i] we are indebted for a series of experiments, based fundamentally upon the original processes of Schafhaütl and Senarmont. He obtained quartz by heating an aqueous solution of colloidal silica to 250° for several months. In his latest research he added hydrofluoboric acid to his solution of silica, and varied the temperature. At 180° to 228° he obtained regular crystals, resembling the form of silica known as christobalite, at 240° to 300° quartz was formed, and at 310° to 360° tridymite. C. Friedel and E. Sarasin[j] produced quartz by heating, in a steel tube, caustic potash, gelatinous silica, and amorphous alumina nearly to redness during fourteen to thirty-eight hours. When the experiment was conducted at a higher tem-

[a] For recent discussions upon the nature of chalcedony, etc., see A. Michel Lévy and E. Munier-Chalmas, Bull. Soc. min., vol. 15, p. 159, 1892; and F. Wallerant, idem, vol. 20, p. 52, 1897. The fibrous varieties, quartzine and lutecite, are especially considered.

[b] For details concerning syntheses of opal, see L. Bourgeois, Reproduction artificielle des minéraux, p. 93, 1884.

[c] See A. Daubrée, Études synthétiques de géologie expérimentale, p. 189, 1879.

[d] Cited by L. Bourgeois, Reproduction artificielle des minéraux, p. 80, 1884.

[e] Ann. chim. phys., 3d ser., vol. 32, p. 142, 1851.

[f] Compt. Rend., vol. 39, p. 135, 1854.

[g] Études synthétiques de géologie expérimentale, p. 158, 1879.

[h] Idem, p. 175.

[i] Am. Chemist, vol. 3, p. 281, 1873. Compt. Rend., vol. 104, p. 602, 1887. Neues Jahrb., 1897, pt. 1, p. 240, Referate.

[j] Bull. *Soc. min., vol. 2, pp. 113, 158, 1879.*

perature they obtained tridymite and quartz side by side. W. Bruhns,[a] upon heating powdered glass to about 300° under pressure, with a weak solution of ammonium fluoride, obtained quartz; when microcline was similarly heated with hydrofluoric acid for fifty-three hours, tridymite was formed. E. Baur[b] claims to have obtained quartz and tridymite simultaneously, as did Friedel and Sarasin, when a mixture of silica, sodium aluminate, and water was heated for six hours to 520° in a steel bomb. Both species and also a soda feldspar were produced by J. Königsberger and W. J. Müller[c] when glass was heated to 300° and upward with water alone. From the filtered and slowly cooled solution quartz and opal were deposited; the tridymite and feldspar were found in the decomposed and undissolved residue. Exceptionally fine, doubly terminated, and clear crystals of quartz were obtained by E. T. Allen[d] when a mixture of magnesium ammonium chloride, sodium metasilicate, and water was heated at 400° to 450° during three days in a steel bomb.

All the foregoing experiments relate to the production of quartz and tridymite in the wet way, but dry methods have also been successfully employed. R. S. Marsden[e] reports the deposition of crystallized silica from solution in molten silver, but the first definite work upon this branch of the subject is due to G. Rose.[f] He fused adularia with microcosmic salt, and amorphous silica with a deficiency of sodium carbonate, with borax, and with wollastonite, and in each case obtained tridymite. He also observed the transformation of quartz into tridymite by simple ignition, whereas upon fusion it yielded only a glass. K. Chrustschoff[g] by fusing a rock rich in quartz also obtained tridymite; and K. B. Schmutz,[h] who melted together a granite, sodium chloride, and sodium tungstate, found plagioclase, augite, and tridymite in the subsequently cooled mass. H. Schulze and A. Stelzner[i] found tridymite as an accidental product in the muffle of a zinc furnace; and C. Velain[j] observed it with anorthite and wollastonite in the glass formed by the ashes of wheat and oats during the combustion of a grain mill. It has also been reported by A. Schwantke,[k] as produced by the action of lightning upon a roofing slate. S. Meunier[l] fused silica, caustic potash, and aluminum fluoride

[a] Neues Jahrb., 1889, pt. 2, p. 62.
[b] Zeitschr. physikal. Chemie, vol. 42, p. 572, 1903. Questioned by A. L. Day and E. S. Shepherd, Am. Jour. Sci., 4th ser., vol. 22, p. 276, 1906.
[c] Centralbl. Min. Geol. Pal., 1906, pp. 339, 353. The authors discuss at length the relations between quartz and tridymite.
[d] Cited by Day and Shepherd, op. cit., p. 297.
[e] Proc. Roy. Soc. Edinburgh, vol. 11, p. 37, 1880.
[f] Ber. Deutsch. chem. Gesell., vol. 2, p. 388, 1869.
[g] Neues Jahrb., 1887, pt. 1, p. 205.
[h] Idem, 1897, pt. 2, p. 147.
[i] Idem, 1881, pt. 1, p. 145.
[j] Bull. Soc. min., vol. 1, p. 113, 1878.
[k] Centralbl. Min. Geol. Pal., 1904, p. 87.
[l] Compt. Rend., vol. 111, p. 509, 1890.

together, and obtained tridymite. P. Hautefeuille[a] heated amorphous silica with sodium or lithium tungstate to 750°, when quartz was formed; but at temperatures from 900° to 1,000° tridymite alone appeared. F. Parmentier,[b] repeating this experiment with sodium molybdate, produced both quartz and tridymite, and so, too, did P. Hautefeuille and J. Margottet[c] with lithium chloride as the flux.

During 1906 several investigations were made public which had for their purpose the determination of the transition point between quartz and tridymite. C. Johns[d] found that quartz sand was transformed to tridymite at 1,500°, and suggested that the true inversion temperature might be 200° lower. P. D. Quensel[e] prepared both minerals, first by heating a mixture of oligoclase and quartz with tungstic oxide and later from amorphous silica and the same flux. According to his data, quartz formed below 1,000° and tridymite above. The figures obtained by A. L. Day and E. S. Shepherd[f] are, however, much more precise. They found that quartz is the unstable form of silica at all temperatures above 800°, and will go over into tridymite whenever the conditions are favorable. On the other hand, when tridymite is fused with a mixture of potassium chloride and lithium chloride, quartz begins to appear at about 750°. When quartz glass was devitrified at 1,200°, or crystalline quartz was heated to the same temperature, homogeneous tridymite was formed.

In all probability quartz and tridymite are polymers of the fundamental molecule SiO_2. Tridymite is the lower, less complex polymer, and is therefore the more stable at high temperatures. The synthetic data all bear out this conclusion and show the difficulty of preparing pyrogenic quartz from magmatic mixtures. J. Morozewicz[g] has shown that when an artificial magma, preferably aluminous, is supersaturated with silica, the excess of the latter separates out on cooling, partly as tridymite and partly as a prismatic modification which has not been further examined. A liparite magma, however, containing about 1 per cent of tungstic acid, solidifies as a mixture of quartz, sanidine, and biotite. The function of the tungstic acid seems to be to liberate silica at the lower range of temperatures through which quartz can form, while at higher temperatures the reverse reaction takes place and silica is reabsorbed. These conclusions, as stated by Morozewicz, are drawn from his own observations, in con-

[a] Bull. Soc. min., vol. 1, p. 1, 1878.

[b] Cited by L. Bourgeois, Reproduction artificielle des minéraux, p. 81, 1884.

[c] Bull. Soc. min., vol. 4, p. 244, 1881.

[d] Geol. Mag., 1906, p. 118.

[e] Centralbl. Min. Geol. Pal., 1906, pp. 657, 728. Quensel puts the melting point of tridymite as low as 1,560°, and claims to have observed incipient fusion at 1,500°.

[f] Am. Jour. Sci., 4th ser., vol. 22, p. 276, 1906. Cf. also G. Stein, Zeitschr. anorg. Chemie, vol. 55, p. 159, 1907. On changes in quartz crystals at 570°, see O. Mügge, Neues Jahrb. Festband, p. 181, 1907.

[g] Min. pet. Mitth., vol. 18, pp. 158–166, 1898.

nection with the experiments by Hautefeuille, which have already been cited. The formation of still a third, prismatic modification of silica, was also reported by Fouqué and Lévy,[a] who obtained it by fusing an excess of silica with the elements of augite, enstatite, or hypersthene.

Next to the feldspars, quartz is the most abundant mineral in the crust of the earth. Tridymite is rare. From a discussion of about seven hundred analyses of igneous rocks, in comparison with their mineralogical characteristics, quartz appears to form about 12 per cent of the entire lithosphere.[b] It occurs in many forms and associations—as a primary mineral, as a secondary deposition, as a cementing substance, and as the chief constituent of quartzites and sandstones. Porphyritic quartz is found in such eruptives as quartz porphyry, rhyolite, dacite, etc. Granitic quartz, which is massive, represents the youngest secretion in granite, syenite, diorite, etc., and is peculiarly rich in liquid or gaseous inclusions. It is the surplus of silica left over after the bases have been satisfied, and being probably less in amount than the eutectic ratio demands it remains in solution to near the end of the solidifying process. We have already noted Vogt's conclusions,[c] to the effect that micropegmatite is a true eutectic mixture of feldspar and quartz, containing about 25 per cent of the latter mineral; and the glass base or groundmass of many rocks has similar composition. It is easy to understand from a consideration of the synthetic experiments why silica should form glass during the solidification of a magma, but the generation of quartz is a less simple matter. Lavas begin to solidify at temperatures above the transition point of quartz, and the development of the latter in such a rock as rhyolite is probably a result of very slow cooling, or even supercooling. That is, the temperature of the cooling mass is probably held for a long time just below the transition point, so that quartz forms instead of tridymite. The formation of quartz, especially in plutonic rocks, is possibly also conditioned by pressure, and it is likely that magmatic water, by reducing the temperature of fusion, may aid in its deposition. Under great pressure the denser quartz should tend to form rather than tridymite. The latter mineral is characteristic of volcanic rocks, especially of rhyolite, trachyte, and andesite. The occurrence of tridymite in Mont Pelée has been especially studied by A. Lacroix.[d] Rocks collected soon after the eruptions contained none of this mineral, which began to appear about six months later. Lacroix therefore regards tridymite not as an immediate crystallization from the magma, but as having been formed, after cooling, by the action of

[a] Synthèse des minéraux et des roches, pp. 88, 89.
[b] F. W. Clarke, Bull. U. S. Geol. Survey No. 228, pp. 19, 20, 1904.
[c] *See p. 223, ante.*
[d] *Bull. Soc.* min., vol. 28, p. 56, 1905.

magmatic gases on the andesitic paste. In recent lavas quartz occurs but rarely. In some cases, however, quartz has been observed in basalts—that is, in rocks which are capable of assimilating, as silicates, more silica than they contain—but in most instances this quartz is regarded as foreign and representing accidental inclusions. There are quartz basalts, however, in which the quartz appears to be an original and early secretion from the magma, and these examples are not easy to explain. In fact, no final explanation of them has yet been proposed.[a] The dissociation hypothesis, offered in the preceding chapter to account for the coexistence of quartz and magnetite, has perhaps the maximum of probability.

Secondary quartz may be produced by several processes. Certain hydrous silicates, like talc and pectolite, are broken down by mere ignition, with liberation of free silica. Possibly this fact may have some bearing upon the formation of quartz as a contact mineral. Most silicates are decomposable by percolating waters, and we have already seen that silica, in a greater or less amount, is almost invariably present in springs and rivers. Silica so dissolved is redeposited by evaporation as opal, but when alkalies are present, according to G. Spezia,[b] quartz is formed. Spezia also observed that when opal was heated with a solution of an alkaline silicate it was transformed into an aggregate of quartz crystals. At high temperatures a dilute solution of sodium silicate dissolves quartz to some extent, but the latter is redeposited at lower temperatures.[c] A 5 per cent solution of borax, under pressure and at 290° to 315°, attacks quartz strongly, but at 12° to 16°, even under very great pressure, no solution was noted.[d] These experiments by Spezia shed much light upon the deposition of opal or quartz as a cementing material. There is also a suggestive experiment reported by Ramsay and Hunter,[e] who heated amorphous silica with water to 200° in a sealed tube. In two days the silica had caked together to a granular mass of glass. The quartz crystals which line cavities in chalcedony or wood opal may have been formed by the action of alkaline silicates upon the last-named mineral. Much has been written upon the solubility of quartz, and the corrosion of quartz pebbles, pre-

[a] See J. P. Iddings, Bull. U. S. Geol. Survey No. 66, 1890, and Am. Jour. Sci., 3d ser., vol. 36, p. 208, 1888, on quartz basalts from New Mexico; and J. S. Diller, Bull. U. S. Geol. Survey No. 79, 1891, on quartz basalts from California. Also a note by Diller, in Science, 1st ser., vol. 13, p. 232, 1889, on porphyritic quartz in eruptive rocks. In Bull. No. 79 Diller cites many references to similar rocks from other localities. Iddings discusses at some length the possible origin of the quartz, but reaches no certain conclusions.

[b] Jour. Chem. Soc., vol. 76, pt. 2, p. 300, 1899.

[c] Idem, vol. 78, pt. 2, p. 595, 1900.

[d] Idem, vol. 80, pt. 2, p. 605, 1901. For Spezia's original papers, of which these notes are abstracts, see Atti Accad. Torino, vol. 31, p. 196, 1896; vol. 33, pp. 289, 876, 1898; vol. 35, p. 750, 1900; and vol. 36, p. 631, 1900–1901.

[e] Rept. British Assoc. Adv. Sci., 1882, p. 239.

sumably by organic matter, has repeatedly been noted.[a] Quartz may be dissolved and replaced by pseudomorphs of other minerals, and silicates are often decomposed by percolating waters, yielding pseudomorphs of quartz. Geological literature contains innumerable references to replacements of this order.

THE FELDSPARS.

Orthoclase.—Monoclinic. Composition, $KAlSi_3O_8$. Molecular weight, 279.4. Specific gravity, 2.56. Molecular volume, 109.1. Colorless, often reddish or yellowish, sometimes gray or green. Hardness, 6 to 6.5.

Microcline.—Triclinic. Composition, specific gravity, hardness, etc., like orthoclase.

Albite.—Triclinic. Composition, $NaAlSi_3O_8$. Molecular weight, 263.3. Specific gravity, 2.605. Molecular volume, 101.1. Colors as in orthoclase, commonly white. Hardness, 6 to 6.5.

Anorthoclase.—Triclinic. Intermediate in composition between albite and microcline.

Anorthite.—Triclinic. Composition, $CaAl_2Si_2O_8$. Molecular weight, 279.1. Specific gravity, 2.765. Molecular volume, 100.9. Fuses at 1,532°. Color, white, grayish, reddish. Hardness, 6 to 6.5.

The mineral celsian may be a barium anorthite, $BaAlSi_2O_8$. Hyalophane is another barium feldspar, which, however, is monoclinic, and appears to be a mixture of a salt like celsian with orthoclase. Traces of barium are often found in feldspars.

Albite and anorthite form the extreme ends of a series of minerals known as the plagioclase feldspars. Several stages of mixture in this series have received distinctive names, as shown below. The symbols Ab and An represent albite and anorthite respectively.

Oligoclase	Ab_6An_1 to Ab_3An_1.
Andesine	Ab_3An_1 to Ab_1An_1.
Labradorite	Ab_1An_1 to Ab_1An_3.
Bytownite	Ab_1An_3 to Ab_1An_6.

These feldspars are generally regarded as isomorphous mixtures of the two end species; but some authorities consider them as representing definite compounds, which, in their turn, may commingle isomorphously in any proportion. On purely chemical grounds, the prevalent opinion is the more probable, and the observations of A. L. Day and E. T. Allen[b] upon the melting points of the feldspars support this conclusion. Their data are as follows:

[a] See C. W. Hayes, Bull. Geol. Soc. America, vol. 8, p. 213, 1896; M. L. Fuller, Jour. Geol., vol. 10, p. 815, 1902; and C. H. Smyth, Am. Jour. Sci., 4th ser., vol. 19, p. 277, 1905. On the chemical reactivity of quartz, due to its solubility, see F. Rinne, Centralbl. Min. Geol. Pal., 1904, p. 333. On the solubility of quartz in alkaline solutions, as conditioned by the fineness of its subdivision, see G. Lunge and C. Millberg, Zeitschr. angew. *Chemie*, 1897, p. 393.

[b] *Am. Jour. Sci., 4th ser.*, vol. 19, p. 93, 1905.

Melting points of feldspars.

	°C.		°C.
Anorthite	1,532	Ab_1An_1	1,419
Ab_1An_6	1,500	Ab_2An_1	1,367
Ab_1An_2	1,463	Ab_3An_1	1,340

These figures give a regular curve, but from this point on to the albite molecule the mixtures become too viscous to admit of good melting-point measurements. It should be noted that the observations were made upon artificial preparations of great purity.

Of all the feldspars anorthite is the one most easily made pyrogenically. In the investigation by Day and Allen just cited it was prepared without difficulty by simply fusing its constituent oxides together; and this observation is in accord with the results obtained by previous experimenters. J. H. L. Vogt[a] observed its formation in slags, and J. Morozewicz[b] repeatedly obtained feldspars varying from labradorite to nearly pure anorthite in his experiments with artificial magmas. Fouqué and Lévy[c] obtained anorthite directly from its constituents; and S. Meunier,[d] upon fusing silica, lime, and aluminum fluoride together, found sillimanite, tridymite, and anorthite in the resultant mass. Anorthite is also formed by the breaking down of other more complex silicates. A. Des Cloizeaux,[e] by fusing garnet and vesuvianite, obtained crystals which Fouqué and Lévy identified as anorthite; and similar results are reported, with much more detail, by C. Doelter and E. Hussak.[f] Doelter[g] also found anorthite among the products formed by fusing epidote, axinite, chabazite, and scolecite. Finally, C. and G. Friedel[h] prepared anorthite in the wet way by heating muscovite with lime, calcium chloride, and a little water to 500° in a steel tube. Feldspars analogous to anorthite, oligoclase, and labradorite, but containing strontium, barium, or lead in place of calcium, were also obtained by Fouqué and Lévy[i] when mixtures of silica, alumina, sodium carbonate, and the proper monoxide were heated together to temperatures a little below the point of fusion.

All attempts to prepare the alkali feldspars by dry fusion have failed. Whether the constituent substances are taken or the natural minerals themselves are fused, the product is always a glass, without any distinct evidences of crystallization. Anorthite, as we have seen, crystallizes easily, and the intermediate feldspars, which form with-

[a] Mineralbildung in Schmelzmassen, p. 181.
[b] Min. pet. Mitth., vol. 18, p. 156, 1898.
[c] Synthèse des minéraux et des roches, p. 138.
[d] Compt. Rend., vol. 111, p. 509, 1890.
[e] Manuel de minéralogie, vol. 1, pp. 277, 543, 1862.
[f] Neues Jahrb., 1884, pt. 1, p. 158.
[g] Idem, 1897, pt. 1, p. 1; Allgem. chem. Mineralogie, p. 183.
[h] Compt. Rend., vol. 110, p. 1170, 1890.
[i] Synthèse des minéraux et des roches, p. 145.

out difficulty near the anorthite end of the series, become more and more unmanageable as we approach albite. This fact was observed by Fouqué and Lévy [a] and corroborated by Day and Allen, the latter having also shown that the viscosity of the alkaline compounds impedes their crystallization, at least within any reasonable time which can be allowed for a laboratory experiment. Albite, however, may be recrystallized, as J. Lenarčič [b] has shown, when it is fused with half its weight of magnetite. The mixture forms a mobile liquid in which crystallization can take place. Other substances also render crystallization possible. P. Hautefeuille [c] heated an alkaline alumosilicate of sodium to 900–1,000° with tungstic acid and obtained albite. A similar experiment with a potassium alumosilicate yielded orthoclase,[d] and a mixture of silica, alumina, and acid potassium tungstate gave the same result. By heating a potassium alumosilicate mixture with alkaline phosphates to which an alkaline fluoride had been added, Hautefeuille [e] produced both quartz and orthoclase, and a potassium feldspar was also obtained by Doelter [f] when a mixture corresponding to $KAlSiO_4$ was fused with potassium fluoride and silicofluoride. How these extraneous substances act is not clear. Day and Allen,[g] repeating a part of Hautefeuille's work, heated a powdered albite glass with sodium tungstate and succeeded in bringing about a crystallization. The fragments of glass, however, became crystalline without change of form and their outlines were unaltered—that is, the transformation from the vitreous to the crystalline modification took place without solution of the material. The mechanism of this reaction is quite unexplained.

By hydrochemical means the alkali feldspars are more easily prepared. C. Friedel and E. Sarasin [h] heated gelatinous silica, precipitated alumina, and caustic potash together, with a little water, to dull redness in a steel tube. Quartz and orthoclase were produced. In a later investigation [i] they heated a mixture having the composition of albite, with an excess of sodium silicate, to about 500° and obtained albite. The same process, essentially, was followed by K. Chrustschoff,[j] who heated an aqueous solution of dialyzed silica with a little alumina and caustic potash to 300° during several months, when quartz and orthoclase formed. C. and G. Friedel [k] also prepared orthoclase by heating muscovite with potassium silicate and water to 500°. In a series of experiments in which amorphous

[a] Synthèse des minéraux et des roches, pp. 142–145.
[b] Centralbl. Min. Geol. Pal., 1903, p. 705.
[c] Compt. Rend., vol. 84, p. 1301, 1877.
[d] Idem, vol. 85, p. 952, 1877.
[e] Idem, vol. 90, p. 830, 1880.
[f] Neues Jahrb., 1897, pt. 1, p. 1.
[g] Am. Jour. Sci., 4th ser., vol. 19, p. 117, 1905.
[h] Compt. Rend., vol. 92, p. 1374, 1881.
[i] Idem, vol. 97, p. 290, 1883.
[j] Idem, vol. 104, p. 602, 1887.
[k] Idem, vol. 110, p. 1170, 1890.

silica was heated with potassium or sodium aluminate and water to 520° in a steel bomb E. Baur[a] determined the conditions under which quartz alone, feldspar alone, or both together, could form. When the silica was in excess, quartz appeared; with silica and the aluminate in nearly equal proportions, both minerals crystallized; when the aluminate preponderated in the mixture, only feldspar formed.

The feldspars are by far the most abundant of all the minerals and form nearly 60 per cent of the material contained in the igneous rocks.[b] Among the latter only the pyroxenites, peridotites, leucitites, and nephelinites contain no feldspars, or at most contain them in quite subordinate quantities. The monoclinic alkali feldspars are especially characteristic of the more siliceous plutonic rocks, although they also occur in many eruptives and in metamorphic schists. In granite, for example, orthoclase, quartz, and muscovite are the conspicuous minerals. Albite is also found under similar conditions. In the less siliceous rocks, such as gabbro or basalt, the plagioclases are more abundant, and the feldspars approach anorthite in composition as the proportion of silica in a magma decreases. This statement, however, must be construed as indicating a tendency, not as the formulation of a distinct rule. The more siliceous rocks contain preferably the more siliceous feldspars, and vice versa. Anorthite has also been repeatedly observed in meteorites, and it is not uncommon as a contact mineral in limestones.[c] Orthoclase, probably of aqueous origin, sometimes occurs as a gangue mineral in metalliferous fissure veins.[d]

The feldspars are all highly alterable minerals and their alteration products are both numerous and important. They are attacked by water alone, more so by water containing carbon dioxide, and still more vigorously by acid waters, such as issue from volcanic vents or are formed by the oxidation of sulphides. Alkaline solutions also exert a powerful decomposing action upon this group of silicates. Among the many experiments relative to this class of reactions those of A. Daubrée[e] are perhaps the most classic. Fragments of orthoclase were agitated with water alone by revolution in a cylinder of iron during 192 hours. From 5 kilograms of the feldspar 12.6 grams of K_2O were thus extracted and found in the filtered solution.

---

[a] Zeitschr. physikal. Chemie, vol. 42, p. 567, 1903. The paper is illustrated by diagrams based upon the phase rule.

[b] See F. W. Clarke, Bull. U. S. Geol. Survey No. 228, p. 20, 1904.

[c] For example, crystals of anorthite occur with epidote in the limestone of Phipsburg, Maine, and also with garnet, scapolite, etc., at Raymond, Maine. See Bull. U. S. Geol. Survey No. 113, p. 110, 1893, and Bull. No. 167, p. 69, 1900. C. H. Warren (Am. Jour. Sci., 4th ser., vol. 11, p. 369, 1901) describes crystals of anorthite from the limestone of Franklin, New Jersey, near its contact with granite.

[d] W. Lindgren (Am. Jour. Sci., 4th ser., vol. 5, p. 418, 1898) has described an occurrence of this kind near Silver City, Idaho. He gives a number of references to other localities.

[e] Études synthétiques de géologie expérimentale, pp. 268–275, 1879.

To water charged with carbon dioxide 2 kilograms of orthoclase, after ten days of agitation, yielded 0.27 gram of K_2O, with 0.75 gram of free silica. With alkaline solutions, especially at elevated temperatures and under pressure, the changes are even more striking, as shown by J. Lemberg's investigations.[a] Labradorite, heated 324 hours to 215° with a sodium carbonate solution, yielded cancrinite. Other feldspars, similarly treated, but with variations in detail, were transformed into analcite. With glasses formed by the fusion of feldspars, and with potassium carbonate, zeolites of the chabazite and phillipsite series were produced.

The end products of the alteration of feldspars are commonly kaolinite and quartz. Other hydrous silicates of alumina are probably also formed. When the alkalies have not been wholly withdrawn muscovite is a common alteration product. Many of the zeolites are generally interpreted as hydrated feldspars, those which contain lime having been derived from plagioclase. From anorthite calcite may be formed. Scapolites,[b] epidote, and zoisite are also not uncommon derivatives of feldspars. Finally, by substitution of bases, one feldspar may pass into another, as in the alteration of orthoclase into albite.[c]

LEUCITE AND ANALCITE.

Leucite.—Isometric. Composition, $KAlSi_2O_6$. Molecular weight, 219. Specific gravity, 2.5. Molecular volume, 87.6. Color, white to gray. Hardness, 5.5 to 6. Fuses at about 1,420°.

Analcite.—Isometric. Composition, $NaAlSi_2O_6.H_2O$. Molecular weight, 220.9. Specific gravity, 2.25. Molecular volume, 98.2. Colorless or white, sometimes tinted by impurities. Hardness, 5 to 5.5.

Although leucite and analcite are widely separated in mineralogical classification, one being placed near the feldspars and the other among the zeolites, they belong chemically together. They are similar in form and in composition, and are connected by so many relations that they can not be adequately studied apart. Analcite, to be sure, differs from leucite in respect to hydration, but G. Friedel[d] has shown that its water is not a part of the essential crystalline molecule. When heated in sealed tubes with dissociating ammonium chloride, leucite and analcite both yield the same ammonium derivative,[e] $NH_4AlSi_2O_6$. Furthermore, as the experiments of J. Lemberg[f] and

[a] Zeitschr. Deutsch. geol. Gesell., vol. 39, p. 559, 1887.

[b] See J. W. Judd, Mineralog. Mag., vol. 8, p. 186, 1889, on the alteration of plagioclase into scapolite.

[c] For an example of this kind see F. A. Genth, Proc. Am. Phil. Soc., vol. 20, p. 392, 1882.

[d] Bull. Soc. min., vol. 19, p. 363, 1896.

[e] F. W. Clarke and G. Steiger, Bull. U. S. Geol. Survey No. 207, 1902.

[f] Zeitschr. Deutsch. geol. Gesell., vol. 28, pp. 537 et seq., 1876.

S. J. Thugutt [a] have shown, the two species are easily convertible the one into the other. When leucite is heated to 180–195° with a solution of sodium chloride or sodium carbonate, analcite is formed. Analcite, similarly treated with potassium salts, is converted into leucite.

Leucite and analcite are both easily prepared synthetically. Leucite can be formed by simply fusing together its constituent oxides, and cooling the mass slowly. This process was followed by Fouqué and Lévy,[b] who also formed leucite, with other minerals, from various artificial magmas.[c] By fusion of its constituents with potassium vanadate, P. Hautefeuille [d] obtained measurable crystals of leucite. The same result followed the fusion of muscovite with potassium vanadate. Syntheses of leucite by indirect methods, with the intervention of fluorides or of silicon chloride, have also been effected by S. Meunier [e] and A. Duboin.[f] C. Doelter,[g] by fusing a mixture equivalent to $Al_2O_3+2SiO_2$ with sodium fluoride, prepared a soda leucite, $NaAlSi_2O_6$.

When microcline and biotite are fused together, leucite appears among the products;[h] and Doelter [i] found that it was formed when muscovite, lepidolite, or zinnwaldite was fused alone. It was also produced hydrochemically by C. and G. Friedel [j] when muscovite was heated to 500° in a steel tube with silica and a solution of potassium hydroxide.

The syntheses of analcite have all been effected under pressure, and in the wet way. A. de Schulten [k] heated sodium silicate, caustic soda, and water, in contact with aluminous glass, at a temperature of 180° to 190°. He also produced analcite by heating a solution of sodium silicate with sodium aluminate, in proper proportions, to 180° for eighteen hours.[l] C. Friedel and E. Sarasin [m] prepared analcite by heating precipitated aluminum silicate with sodium silicate and water to 500° in a sealed tube. J. Lemberg [n] derived analcite from andesine and oligoclase by prolonged heating with sodium carbonate solutions at 210° to 220°. These transformations illustrate the ready formation of analcite as a secondary mineral. They are not, however, all strictly similar. Analcite derived from leucite can be transformed into leucite

[a] Mineralchemische Studien, pp. 100, 101, Dorpat, 1901.
[b] Synthèse des minéraux et des roches, p. 153.
[c] Bull. Soc. min., vol. 2, p. 111, 1879; vol. 3, p. 118, 1880.
[d] Cited by L. Bourgeois, Reproduction artificielle des minéraux, p. 130.
[e] Compt. Rend., vol. 90, p. 1009, 1880; vol. 111, p. 509, 1890.
[f] Idem., vol. 114, p. 1361, 1892.
[g] Neues Jahrb., 1897, pt. 1, p. 1.
[h] Fouqué and Lévy, Synthèse des minéraux et des roches, p. 77.
[i] Loc. cit.
[j] Compt. Rend., vol. 110, p. 1170, 1890.
[k] Idem, vol. 90, p. 1493, 1880; Bull. Soc. min., vol. 3, p. 150, 1880.
[l] Compt. Rend., vol. 94, p. 96, 1882.
[m] Idem, vol. 97, p. 290, 1883.
[n] Zeitschr. Deutsch. geol. Gesell., vol. 39, p. 559, 1887.

again, as we have already seen; but according to S. J. Thugutt[a] the reaction with andesine is not reversible. The two alterations, therefore, are chemically unlike. Analcite may also be generated by alteration from elæolite and ægirite.[b] When formed with other zeolites, it is the earliest one to appear.

Leucite is a mineral characteristic of many recent lavas, but not found in the abyssal rocks. Its absence from the latter and older depositions may be due to its easy alteration into other species; but such an explanation is of course only tentative. Its formation takes place only when the potassium of a magma is in excess over the amount required to form feldspars. When the excess is small, leucite and feldspar may both appear; when it is large enough, leucite alone forms. Comparatively speaking, it is rather a rare mineral; a fact which is possibly explained by some observations of A. Lagorio.[c] In an artificial leucite-tephrite magma, kept at a red heat, the difficultly fusible leucite crystallizes out. If, then, the temperature is raised, the mineral redissolves; if lowered, the mass becomes so viscous that the crystallization of leucite ceases. In brief, the formation of leucite seems to be possible only through a very narrow range of temperatures, and the favorable conditions do not often occur.[d]

Analcite is most frequently found as a secondary mineral, the product of zeolitization; and until recent years it was supposed to have no other origin. It was often noted in eruptive rocks, but it was supposed to be always the result of alteration. It is now generally recognized, however, that analcite may occur as an original pyrogenic mineral; but, being a hydrated species, it can so appear only in deep-seated rocks, where it has been formed under pressure. W. Lindgren,[e] for example, identified it in the sodalite syenite of Square Butte, Montana. In certain rocks analcite has probably been erroneously identified as glass; for instance, in the monchiquites, which L. V. Pirsson[f] interprets as analcite basalts equivalent to the similar leucite lavas. W. Cross[g] has described an analcite basalt from near Pikes Peak, Colorado, and has also identified primary analcite in the phonolites of Cripple Creek.[h] The groundmass of a tinguaite from Manchester, Massachusetts, according to H. S. Washington,[i] consists of analcite and nepheline; and J. W. Evans[j] has identified the mineral in a monchiquite from Mount Girnar, India. In the last

[a] Neues Jahrb., Beil. Bd. 9, p. 604, 1894–95.

[b] See W. C. Brögger, Zeitschr. Kryst. Min., vol. 16, pp. 223, 333; 1890.

[c] Zeitschr. Kryst. Min., vol. 24, p. 293, 1895.

[d] On the formation of leucite in igneous rocks, see H. S. Washington, Jour. Geol., vol. 15, pp. 257, 357, 1907.

[e] Am. Jour. Sci., 3d ser., vol. 45, p. 286, 1893.

[f] Jour. Geol., vol. 4, p. 679, 1896.

[g] Idem, vol. 5, p. 684, 1897.

[h] Sixteenth Ann. Rept. U. S. Geol. Survey, pt. 2, p. 36, 1895.

[i] *Am. Jour. Sci.*, 4th ser., vol. 6, p. 182, 1898.

[j] *Quart. Jour. Geol. Soc.*, vol. 57, p. 38, 1901.

instance some of the analcite has been transformed into a mixture of feldspar and nepheline. The extreme case of an analcite rock, however, is the heronite from Heron Bay, Lake Superior, described by A. P. Coleman.[a] This is a dike rock containing analcite, plagioclase, orthoclase, and ægirine, in which the analcite forms 47 per cent of the mass. In the analcite diabase described by H. W. Fairbanks,[b] the analcite may have been derived from nepheline. It is partly replaced by feldspar, and partly altered into a mineral which may be prehnite. Analcite also alters into kaolin.[c]

Alterations of leucite into analcite have been repeatedly observed, as in the Saxon Wiesenthal[d] and in the Highwood Mountains, Montana.[e] The most notable transformation of leucite, however, is into pseudomorphs of mixed orthoclase and nepheline.[f] The "pseudoleucite" crystals of Magnet Cove, Arkansas, are a mixture of this kind.

THE NEPHELITE GROUP.

Nephelite or elæolite.—Hexagonal. Simplest empirical formula, $NaAlSiO_4$. Corresponding molecular weight, 142.5. Specific gravity, 2.55 to 2.65. Molecular volume, 54.8. Normally white or colorless; often tinted yellow, gray, greenish, or reddish by impurities. Hardness, 5.5 to 6.

Kaliophilite or phacelite.—Hexagonal. Composition, $KAlSiO_4$. Molecular weight, 158.6. Specific gravity, 2.5 to 2.6. Molecular volume, 6.1. Colorless. Hardness, 6.

Eucryptite.—Hexagonal. Composition, $LiAlSiO_4$. Molecular weight, 126.5. Specific gravity, 2.67. Molecular volume, 47.3. Colorless or white. Only known as produced by the alteration of spodumene.

Kaliophilite and eucryptite are rare minerals, having slight geological significance. They are included here because of the light they shed upon the composition of nephelite. The formula given for the latter species is analogous to the formulæ of kaliophilite and eucryptite, and is also that of the artificial mineral. Natural nephelite or elæolite always varies from the theoretical composition, and

[a] Jour. Geol., vol. 7, p. 431, 1899.

[b] Bull. Dept. Geology, Univ. California, vol. 1, p. 273, 1895. See also B. R. Young, Trans. Edinburgh Geol. Soc., vol. 8, p. 326, 1903, on analcite diabase in Scotland; C. W. Knight, Canadian Rec. Sci., vol. 9, p. 265, 1905, on an analcite-trachyte tuff from southwestern Alberta; and A. Pelikan, Min. pet. Mitth., vol. 25, p. 113, 1906, on two analcite phonolites from Bohemia.

[c] W. C. Brögger, Zeitschr. Kryst. Min., vol. 16, p. 199, 1890.

[d] See A. Sauer, Zeitschr. Deutsch. geol. Gesell., vol. 37, p. 452, 1885.

[e] W. H. Weed and L. V. Pirsson, Am. Jour. Sci., 4th ser., vol. 2, p. 315, 1896.

[f] See Sauer, loc. cit.; J. F. Williams, Ann. Rept. Geol. Survey Arkansas, 1890, vol. 2, p. 267; E. Hussak, Neues Jahrb., 1890, pt. 1, p. 166; and E. Scacchi, Rendiconti Accad. Napoli, vol. 24, p. 315.

approximates more nearly the formula $Na_6K_2Al_8Si_9O_{34}$. This variation is probably due, first, to isomorphous admixtures of kaliophilite, and possibly also to the presence of SiO_3 or Si_3O_8 groups replacing a part of the normal SiO_4. The chemical equivalency of nephelite and kaliophilite is well shown by an experiment of J. Lemberg's.[a] He heated elæolite one hundred hours to 200° with a solution of potassium silicate, and obtained an amorphous product having the composition $KAlSiO_4$.

P. Hautefeuille[b] prepared an artificial nephelite by fusing a mixture of silica and sodium aluminate with a flux of lithium vanadate. Fouqué and Lévy[c] obtained the mineral more directly by fusing its constituents together, and so, too, did C. Doelter.[d] Doelter's preparation agreed closely with the empirical formula $NaAlSiO_4$. According to Fouqué and Lévy, nephelite is one of the minerals which crystallize most easily from fusion. S. Meunier[e] prepared nephelite less simply, by fusing silica, alumina, and soda with cryolite; and A. Duboin[f] effected the synthesis of kaliophilite when potassium fluoride, alumina, and silica or potassium fluosilicate were fused together. By similar processes Doelter[g] obtained both nephelite and kaliophilite. C. and G. Friedel[h] converted muscovite into nephelite by heating with a solution of caustic soda to 500° in a steel tube. The presence of nephelite in pseudomorphs after leucite was noted in the description of the latter mineral. An amorphous silicate having the composition of nephelite was obtained by R. Hoffmann[i] when kaolin and dry sodium carbonate were heated together, and a similar result was reached by A. Gorgeu[j] and P. G. Silber.[k] When Gorgeu heated kaolin with potassium iodide, a salt like kaliophilite was formed. In these reactions the temperature was kept below that at which the materials would sinter together.

Nephelite is rarely found except in igneous rocks.[l] The glassy crystallized variety found in recent lavas is commonly known by the first name of the species; the massive, opaque, or coarsely crystalline mineral of the older rocks is called elæolite. Phonolite, nephelinite, nepheline basalt, and elæolite syenite are among the important rocks in which nephelite is an essential species. Its presence indicates an

[a] Zeitschr. Deutsch. geol. Gesell., vol. 37, p. 966, 1885.
[b] Cited by Fouqué and Lévy, loc. cit.
[c] Synthèse des minéraux et des roches, p. 155.
[d] Zeitschr. Kryst. Min., vol. 9, p. 321, 1884.
[e] Compt. Rend., vol. 111, p. 509, 1890.
[f] Idem, vol. 115, p. 56, 1892.
[g] Neues Jahrb., 1897, pt. 1, p. 1.
[h] Compt. Rend., vol. 110, p. 1170, 1890.
[i] Liebig's Annalen, vol. 194, p. 5, 1878.
[j] Ann. chim. phys., 6th ser., vol. 10, p. 145, 1887.
[k] Ber. Deutsch. chem. Gesell., vol. 14, p. 941, 1881.
[l] Nephelite is reported by Max Bauer (Neues Jahrb., 1896, pt. 1, p. 85; 1897, pt. 1, p. 258) in certain crystalline schists, and also associated with chlorite in jadeite.

excess of soda in a magma over the amount required to form feldspars, and it is one of the latest minerals to be deposited.[a]

Nephelite and elæolite are peculiarly subject to alteration.[b] Natrolite, analcite, hydronephelite, thomsonite, sodalite, muscovite, and kaolin are among the products thus formed. Eucryptite also alters into muscovite.[c]

THE CANCRINITE-SODALITE GROUP.

Cancrinite.—Hexagonal. Composition uncertain, but probably best represented by the formula $Al_3Na_4HCSi_3O_{15}$. Corresponding molecular weight, 511.5. Specific gravity, 2.4. Molecular volume, 213. Color commonly yellow, but also white, gray, greenish, bluish, or reddish. Hardness, 5 to 6.

Sodalite.[d] — Isometric. Composition normally $Al_3Na_4Si_3O_{12}Cl$; but variable. Molecular weight, 486. Specific gravity, 2.2. Molecular volume, 221. Color, white, gray, greenish, yellowish, reddish, very often bright blue. Hardness, 5.5 to 6.

Haüynite.—Isometric. Composition, $Al_3Na_3CaSSi_3O_{16}$, but varying in the relative proportions of Na and Ca. Molecular weight, 563.6. Specific gravity, 2.4 to 2.5. Molecular volume, 230. Color, blue, green, red, or yellow. Hardness, 5.5 to 6.

Noselite or nosean.—Isometric. Composition like haüynite, but without calcium, $Al_3Na_5SSi_3O_{16}$. Molecular weight, 569.5. Specific gravity, 2.25 to 2.4. Molecular volume, 242. Color, gray, bluish, or brownish. Hardness, 5.5.

Chemically, these four minerals, together with lapis lazuli and the rarer microsommite, are to be classed as derivatives of nephelite, with which they are commonly associated. Their exact composition is still somewhat uncertain. The formula assigned to cancrinite is that developed by F. W. Clarke;[e] the three isometric species are written as interpreted by W. C. Brögger and H. Bäckström,[f] who have shown their relationship to the garnet group. Under sodalite, however, more than one compound may be included, as the experiments of J. Lemberg[g] and S. J. Thugutt[h] seem to indicate. The two last-named authorities regard these minerals as double molecular compounds of a silicate like nephelite with sodium carbonate, chlo-

[a] See the experiments of J. Morozewicz, Min. pet. Mitth., vol. 18, 1898, pp. 1, 105. Compare also J. Lenarčič, Centralbl. Min. Geol. Pal., 1903, pp. 705, 743.

[b] See W. C. Brögger, Zeitschr. Kryst. Min., vol. 16, pp. 223 et seq., 1890.

[c] See G. J. Brush and E. S. Dana, Am. Jour. Sci., 3d ser., vol. 20, p. 266, 1880.

[d] A variety of sodalite containing some sulphur has been named hackmannite by L. H. Borgström, Zeitschr. Kryst. Min., vol. 37, p. 284, 1903.

[e] Bull. U. S. Geol. Survey No. 125, pp. 22–24, 1895.

[f] Zeitschr. Kryst. Min., vol. 18, p. 209, 1891.

[g] Zeitschr. Deutsch. geol. Gesell., vol. 37, 1885, p. 969.

[h] Mineralchemische Studien, Dorpat, 1891.

ride, sulphate, etc. In support of this view Thugutt prepared a large number of artificial compounds in which the sodium chloride of sodalite was replaced by other salts; but the new substances differed from the natural minerals in containing water of crystallization.[a] A discussion of these salts, however, would lead us too far afield.

An artificial cancrinite was obtained by Lemberg[b] when alumina, sodium silicate, and sodium carbonate solution were heated together under pressure; and also by the action of sodium carbonate, fused in its waters of crystallization, upon elæolite.[c] Labradorite, heated to 215° with sodium carbonate solution, also gave him cancrinite.[d] C. and G. Friedel[e] prepared a hydrous cancrinite by heating muscovite to 500° in a solution of sodium carbonate and caustic soda. With sodium sulphate in place of the carbonate, a hydrous noselite was formed.[f] The same authors obtained sodalite by treating muscovite at 500° with sodium chloride and caustic soda.[g] Lemberg[h] produced sodalite by fusing nephelite with common salt; and the fusion of elæolite or sodalite with sodium sulphate gave noselite.[i] In short, the experiments of Lemberg, which were very numerous, proved that compounds of this class could be derived, by simple reactions, from nephelite, and that they are mutually convertible, one into another. Furthermore, S. J. Thugutt[j] prepared sodalite by heating natrolite with soda solution and aluminum chloride to 195° under pressure; and also from similar treatment of kaolin with common salt and caustic soda at about 212°.[k] Sodalite, then, has been derived by artificial means from elæolite, muscovite, and kaolin. It was also obtained by Z. Weyberg[l] when a mixture of silica, alumina, and soda was fused with a large excess of common salt.

In his work upon artificial magmas, J. Morozewicz[m] prepared noselite, haüynite, and sodalite by purely pyrochemical methods, equivalent to those which produce these minerals in volcanic rocks. The fusions were effected at temperatures not exceeding 600° to 700°, for compounds of this class are decomposed by an excessive heat. From a mixture of kaolin, sodium carbonate, and sodium sulphate, noselite crystals were formed. From a more complex mixture,

---

[a] A "chromate sodalite," containing Na_2CrO_4, has lately been described by Z. Weyberg, Centralbl. Min. Geol. Pal., 1904, p. 727. It differs from the hydrated compound prepared by Thugutt.

[b] Zeitschr. Deutsch. geol. Gesell., vol. 35, p. 593, 1883.

[c] Idem, vol. 37, p. 963, 1887.

[d] Idem, vol. 39, p. 559, 1887.

[e] Bull. Soc. min., vol. 14, p. 71, 1891.

[f] Idem, vol. 13, p. 238, 1890.

[g] Compt. Rend., vol. 110, p. 1170, 1890.

[h] Zeitschr. Deutsch. geol. Gesell., vol. 28, p. 602, 1876.

[i] Idem, vol. 35, p. 590, 1883.

[j] Neues Jahrb., Beil. Bd. 9, p. 576, 1894–95.

[k] Mineralchemische Studien, p. 18.

[l] Centralbl. Min. Geol. Pal., 1905, p. 717.

[m] *Min. pet. Mitth.*, vol. 18, pp. 128–147, 1898.

containing also calcium silicate, potassium silicate, iron silicate, calcium carbonate, and calcium sulphate, haüynite was produced. Kaolin fused with sodium carbonate and sodium chloride gave a compound having the formula already assigned to sodalite; elæolite, similarly treated, yielded a substance richer in chlorine. Morozewicz concludes that two kinds of sodalite exist; to one he gives the formula $2(Na_2Al_2Si_2O_8)+NaCl$, while the other agrees with $3(Na_2Al_2Si_2O_8)+2NaCl$.

Cancrinite occurs only in elæolite syenite, closely associated with nephelite and sodalite. It alters into a zeolitic substance, "spreustein," in which natrolite is the predominating mineral.[a] Crystallized sodalite is also found in trachyte and phonolites, in which it separates after augite.[b] Sodalite alters into hydronephelite and natrolite. Haüynite and noselite form in various leucitic and nephilinic rocks among the younger eruptives. In order of deposition they are the oldest of the feldspathoids.

THE PYROXENES.

Enstatite.—Orthorhombic. Composition, $MgSiO_3$, but generally with admixtures of $FeSiO_3$. When 10 to 12 per cent of the latter salt is present the mineral is known as bronzite. Minimum molecular weight, 100.8. Specific gravity, 3.1. Molecular volume, 32.5. Color ranging from white to olive green and brown. Hardness, 5.5.

Hypersthene.—Orthorhombic. Composition like enstatite, but with $FeSiO_3$ predominating. The molecular weight of the latter compound is 132.3. Color, greenish and brownish to black. Specific gravity, 3.4 to 3.5. Hardness, 5 to 6.

Enstatite and hypersthene, the orthorhombic members of the pyroxene group, are to be regarded as mixtures of the two isomorphous salts $MgSiO_3$ and $FeSiO_3$. Hypersthene is also modified in many cases by the presence of a third salt, $CaSiO_3$, but in very subordinate quantities. The enstatite of the Bishopville meteorite consists of the magnesian silicate very nearly pure. The formulæ given above are minima, the actual formulæ being multiples of them, at least double, possibly more.

The first synthesis of supposed enstatite was made by J. J. Ebelmen,[c] who fused silica, magnesia, and boric oxide together. A. Daubrée[d] obtained it repeatedly in his attempts to reproduce the characteristics of meteorites, when meteoric stones and magnesian

[a] See W. C. Brögger, Zeitschr. Kryst. Min., vol. 16, p. 240, 1890; also L. Saemann and F. Pisani, Ann. chim. Phys., 3d ser., vol. 67, p. 350, 1863.

[b] On sodalite syenite from Square Butte, Montana, see W. Lindgren, Am. Jour. Sci., 3d ser., vol. 45, p. 286, 1893.

[c] Ann. chim. phys., 3d ser., vol. 33, p. 58, 1851.

[d] Compt. Rend., vol. 62, pp. 200, 369, 660, 1866.

eruptive rocks were fused. "Enstatite" recrystallized on cooling the melts. He also prepared the same substance by fusing olivine with silica, and he found that when serpentine was melted it broke down into a mixture of enstatite and olivine. The latter reaction has been verified quantitatively in the laboratory of the United States Geological Survey. P. Hautefeuille[a] produced a silicate which he identified with enstatite, by dissolving amorphous silica in molten magnesium chloride, and S. Meunier[b] effected its synthesis by acting on metallic magnesium with silicon chloride and water vapor.

Later investigations, however, by F. Fouqué and A. Michel Lévy,[c] and also by J. H. L. Vogt,[d] have shown that the foregoing syntheses were misinterpreted. The product obtained was in most cases, if not in all, a monoclinic magnesium metasilicate, instead of the orthorhombic enstatite. The latter form was obtained by Fouqué and Lévy[e] by simply fusing silica, magnesia, and ferric oxide together, but it was more or less mixed with the monoclinic variety.

In the elaborate research by E. T. Allen, F. E. Wright, and J. K. Clement[f] it has been found that magnesium metasilicate exists in four modifications, two being pyroxenes and two amphiboles. The monoclinic pyroxene is formed whenever a melt having its composition is allowed to crystallize at temperatures a little below its melting point, 1,521°. It can be crystallized at lower temperatures from solution in molten calcium vanadate, magnesium vanadate, or magnesium tellurite. The other three modifications of the silicate pass into this variety when heated to about 1,000° in molten magnesium chloride traversed by a stream of dry hydrochloric acid gas. The monoclinic pyroxene, then, is the most stable form of magnesium metasilicate.

When a glass having the composition of enstatite is devitrified by heating to a temperature above 1,000° and below 1,100°, best at about 1,075°, the orthorhombic enstatite is formed. In this way good crystals were produced. At slightly higher temperatures the monoclinic pyroxene begins to appear. The presence of enstatite in an igneous rock is evidence that the final crystallization took place at the relatively lower temperatures, for above them it can not exist. What the effect of iron may be in modifying the properties of these silicates is as yet undetermined.

Enstatite and hypersthene are common pyrogenic minerals, and occur in many eruptive rocks. Enstatite and bronzite are often constituents of meteorites. According to J. Morozewicz,[g] the orthorhom-

[a] Ann. chim. phys., 4th ser., vol. 4, p. 174, 1865.
[b] Compt. Rend., vol. 90, p. 349, 1880; vol. 93, p. 737, 1881.
[c] Synthèse des minéraux et des roches, 1882.
[d] Mineralbildung in Schmelzmassen, 1892, p. 71.
[e] Loc. cit.
[f] Am. Jour. Sci., 4th ser., vol. 22, p. 385, 1906.
[g] Min. pet. Mitth., vol. 18, p. 110, 1898.

bic pyroxenes separate from metasilicate magmas when the ratio Mg+Fe:Ca is 3:1 or greater. Both species undergo alteration, through hydration, into talc[a] and serpentine. Bastite is an alteration product of this kind, having the composition of serpentine.

Wollastonite.—Monoclinic. Composition, $CaSiO_3$. Minimum molecular weight, 116.5. Specific gravity, 2.85. Molecular volume, 40.5. Color, white, often tinted by impurity. Hardness, 4.5 to 5.

Calcium metasilicate is known in two modifications—the natural wollastonite and an artificial pseudohexagonal form. The latter is easily produced by fusing lime and silica together,[b] and has been repeatedly observed in slags.[c] Wollastonite has also been found in slags, but rarely.[d] E. Hussak,[e] however, by fusing and slowly cooling a glass containing silica, soda, lime, and boric acid, obtained crystals of wollastonite. C. Doelter[f] also effected the synthesis of wollastonite by fusing calcium metasilicate with sodium fluoride.

According to E. T. Allen and W. P. White,[g] wollastonite is stable only below 1,180°, and above that temperature it passes into the pseudohexagonal modification. By heating a glass of the composition $CaSiO_3$ to between 800° and 1,000°, pure wollastonite was obtained. The reverse change, from the pseudo variety to the normal, was brought about by dissolving the former in molten calcium vanadate and crystallizing at a temperature between 800° and 900°. The pseudowollastonite has not yet been observed as a natural mineral, but wollastonite is common. The inference from this fact, as drawn by G. F. Becker,[h] is that the rocks containing free calcium metasilicate must have crystallized at temperatures below the inversion point of wollastonite, for otherwise its isomer would have appeared.

Although wollastonite is usually classed with the pyroxenes, its place among them is doubtful. It differs from them in being easily decomposed by acids, and its occurrences in nature are not the same. It is very rare in eruptive rocks, and is commonly found as a product of contact metamorphism, especially in limestones. It occurs also in feldspathic schists. H. Wulf[i] has described a rock from Hereroland, Africa, which consisted of wollastonite and diopside in nearly equal proportions. The alteration of wollastonite to ordinary pyrox-

[a] See C. H. Smyth, School of Mines Quart., vol. 17, p. 333, 1896.

[b] See L. Bourgeois, Bull. Soc. min., vol. 5, p. 13, 1882; A. Gorgeu, idem, vol. 10, p. 273, 1887; and C. Doelter, Neues Jahrb., 1886, pt. 1, p. 119.

[c] See J. H. L. Vogt, Mineralbildung in Schmelzmassen, pp. 34–80, 1892.

[d] See Vogt, loc. cit., and P. Heberdey, Zeitschr. Kryst. Min., vol. 26, p. 22, 1896.

[e] Zeitschr. Kryst. Min., vol. 17, p. 101, 1890.

[f] Min. pet. Mitth., vol. 10, p. 83, 1888.

[g] Am. Jour. Sci., 4th ser., vol. 21, p. 89, 1906. See also A. L. Day, E. S. Shepherd, and F. E. Wright, idem, vol. 22, p. 265.

[h] Prefatory note to the memoir by Allen and White.

[i] Min. pet. Mitth., vol. 8, p. 230, 1887.

ene has been reported by C. H. Smyth.[a] The secondary mineral pectolite, $HNaCa_2Si_3O_9$, is regarded as a derivative of wollastonite.

Diopside.—Monoclinic. Composition, $CaMgSi_2O_6$. Molecular weight, 217.3. Specific gravity, 3.2. Molecular volume, 68. Color, white, yellowish, green, and nearly black. Hardness, 5 to 6. Chrome diopside is a variety containing small amounts of chromium.

Hedenbergite.—Monoclinic. Composition, $CaFeSi_2O_6$. Molecular weight, 248.8. Specific gravity, 3.5 to 3.6. Molecular volume, 70. Color, grayish green to black. Hardness, 5 to 6.

Between diopside and hedenbergite there are various intermediate mixtures. Schefferite is another monoclinic pyroxene containing manganese, up to over 8 per cent of MnO. Jeffersonite is another member of this group containing zinc. These variations may represent mixtures of the simple salts $MnSiO_3$ and $ZnSiO_3$ with the lime, magnesia, and iron silicates; but the commingled salts are probably more complex. Rhodonite, $MnSiO_3$, is classed also as a pyroxene, but is triclinic. It can hardly be considered as a rock-forming mineral, at least not in the usual acceptance of the term.

Monoclinic pyroxenes of the diopside-hedenbergite type have been repeatedly observed in slags.[b] A. Daubrée,[c] on heating water to incipient redness in a glass tube, obtained crystals of diopside. G. Lechartier[d] effected the synthesis of these pyroxenes by fusing silica, lime, and magnesia with an excess of calcium chloride. When ferric oxide was added to the mixture, iron pyroxenes were formed. In the experiments of J. Morozewicz[e] with artificial magmas these minerals were deposited when the ratio Mg+Fe : Ca was less than 3 : 1.

Dr. E. T. Allen informs me that he has prepared diopside by directly fusing its constituent oxides together, and that it is easily recrystallized from solution in molten calcium chloride.

The monoclinic pyroxenes are common in eruptive rocks and the crystalline schists. The variety known as diallage is especially characteristic of gabbro. They also occur as secondary minerals. R. Brauns[f] has observed the variety salite, as formed in a picrite by the action of aqueous solutions upon olivine and plagioclase.

Acmite or ægirite.—Monoclinic. Normally $NaFe'''Si_2O_6$, but often containing ferrous and lime silicates in isomorphous admixture. Molecular weight, 231.7. Specific gravity, 3.53. Molecular volume, 65.6. Color, brownish, greenish, to black. Hardness, 6 to 6.5.

---

[a] Am. Jour. Sci., 4th ser., vol. 4, p. 309, 1897.

[b] See citations in L. Bourgeois, Reproduction artificielle des minéraux, pp. 115–116; and Fouqué and Lévy, Synthèse des minéraux et des roches, pp. 102–103. Also G. J. Brush, Am. Jour. Sci., 2d ser., vol. 39, p. 132.

[c] Études synthétiques de géologie expérimentale, pp. 159–176.

[d] Compt. Rend., vol. 67, p. 41, 1868. Compare A. Gorgeu, Bull. Soc. min., vol. 10, pp. 273, 276, 1887.

[e] *Min. pet.* Mitth., vol. 18, pp. 123 et seq., 1898. See also J. H. L. Vogt, Die Silikatschmelzlösungen, pt. 1, pp. 28–49, 1903.

[f] *Neues Jahrb.*, 1898, pt. 2, p. 79.

Jadeite.—Monoclinic. Composition, $NaAlSi_2O_6$. Molecular weight, 202.9. Specific gravity, 3.34. Molecular volume, 60.8. Color, white and various shades of green. Hardness, 6.5 to 7.

Spodumene.—Monoclinic. Composition, $LiAlSi_2O_6$. Molecular weight, 186.9. Specific gravity, 3.17. Molecular volume, 58.9. Color, white, yellow, green, and amethystine. Hardness, 6.5 to 7. Hiddenite is the emerald-green gem spodumene from North Carolina. Kunzite is the amethystine gem variety from California.

These alkali pyroxenes, as they are often called, are interesting on account of their constitutional similarity. Acmite, however, is the most important as a rock-forming mineral, although in the interpretation of mixed pyroxenes the jadeite molecule must often be taken into account. Spodumene occurs only sporadically—usually, if not always, in granites—and is peculiarly noticeable on account of the immense size which its crystals may attain. Crystalline faces of spodumene many feet in length have been observed in the Black Hills of South Dakota. The alteration of spodumene, as studied by A. A. Julien,[a] and more exhaustively by G. J. Brush and E. S. Dana,[b] is very instructive. First, by the action of percolating solutions containing soda, it is transformed into a mixture of eucryptite, $LiAlSiO_4$, and albite, $NaAlSi_3O_8$. Then, by the further action of potassium salts, the eucryptite is altered into muscovite, $KH_2Al_3Si_3O_{12}$. Albite and muscovite are the final products of these metamorphoses. The intimate mixture of these two compounds was long thought to be a distinct mineral, cymatolite.

Acmite can be produced synthetically, but its constituent oxides, when fused together, commonly yield only a glass containing crystals of magnetite. Acmite, when fused, resolidifies as a mixture of magnetite and glass.[c] C. Doelter,[d] however, from the fusion of an artificial mixture of the oxides, obtained some acmite. H. Bäckström[e] fused silica, ferric oxide, and sodium carbonate, mingled in the proper proportions, together and held the solidified mixture at a dull red heat for three days. Under those conditions acmite was formed. He also obtained it by fusing a leucite phonolite and subjecting the glass to a similar, very slow devitrification. Z. Weyberg[f] also obtained acmite by fusing a mixture of the composition $2SiO_2+Fe_2O_3+Na_2O$ with a large excess of sodium chloride. According to J. Morozewicz,[g] the acmite-jadeite compounds form in metasilicate magmas

[a] Ann. New York Acad. Sci., vol. 1, p. 318, 1879.
[b] Am. Jour. Sci., 3d ser., vol. 20, p. 257, 1880.
[c] M. Vučnik, Centralbl. Min. Geol. Pal., 1904, p. 369.
[d] Neues Jahrb., 1897, pt. 1, p. 16.
[e] Bull. Soc. min., vol. 16, p. 130, 1893.
[f] Centralbl. Min. Geol. Pal., 1905, p. 717.
[g] Min. pet. Mitth., vol. 18, p. 123, 1898.

when the silica amounts to less than 50 per cent. The exact conditions of their generation, however, with respect to temperature and rate of cooling, are yet to be determined.

Acmite is a mineral of eruptive rocks, generally of those which contain leucite or nephelite. It is especially common in elæolite syenite. Concerning the petrologic relations of jadeite less is known; but S. Franchi[a] has identified the mineral as an essential constituent of certain eruptive rocks in Piedmont. Acmite or ægirite, according to W. C. Brögger,[b] alters into analcite. J .Lemberg,[c] by heating spodumene or jadeite with alkaline solutions under pressure, also obtained analcite. Jadeite alone is slowly attacked, but the glass resulting from its fusion is altered readily. It is noticeable that jadeite and dehydrated analcite have the same empirical composition; but the denser jadeite molecule is doubtless the more complex. The one is a polymer of the other. These alterations, natural or artificial, emphasize the constitutional similarity of the three alkali pyroxenes.

Augite.—Monoclinic. Composition very variable, for augite is an isomorphous mixture of several different silicates. Specific gravity 2.93 to 3.49. Color, white, green, brown, and black. Hardness, 5 to 6.

Augite is essentially a metasilicate of lime, magnesia, and ferrous iron, plus silicates of ferric iron and alumina. Manganese and alkalies are often present, and some varieties contain titanic oxide up to 4.5 per cent. In addition to silicate molecules analogous to those of the pyroxenes already described, augite is supposed to contain a compound of the form $R''Al_2SiO_6$, which, however, is hypothetical. The rare mineral kornerupine or prismatine, however, has the formula $MgAl_2SiO_6$, and may represent the aluminous constituent of the nonalkaline augites. When alkalies are present they probably represent molecules analogous to or identical with acmite and jadeite.

The following analyses of rock-forming augite were all made in the laboratory of the United States Geological Survey:

Analyses of augite.[d]

A. From nepheline basalt, Black Mountain, Uvalde quadrangle, Texas. W. F. Hillebrand, analyst.
B. From dolerite, near Valmont, Colorado. Analyzed by L. G. Eakins.
C. From tinguaite, Two Buttes, Colorado. Analyzed by Hillebrand.
D. From granite, Silver Cliff, Colorado. Eakins, analyst.
E. From a dike, Silver Cliff. Eakins, analyst.
F. From basalt, Mount Taylor region, New Mexico. Analyzed by T. M. Chatard.

[a] Rendiconti Accad. Lincei, 1900, vol. 9, pt. 1, p. 349.
[b] Zeitschr. Kryst. Min., vol. 16, p. 333, 1890. Brögger cites many references to the literature of acmite.
[c] Zeitschr. Deutsch. geol. Gesell., vol. 39, p. 584, 1887.
[d] From Bull. U. S. Geol. Survey No. 220, pp. 33, 34, 1903.

	A.	B.	C.	D.	E.	F.
SiO_2	45.23	49.10	47.54	48.72	54.87	47.06
TiO_2	4.28	.....	3.00	.....	.....	1.82
Al_2O_3	7.73	7.95	4.14	9.27	6.34	7.77
Cr_2O_3	.....	.....	trace?	.....	.....	trace
Fe_2O_3	2.95	.....	5.64	3.77	2.88	1.30
FeO	4.07	8.30	6.42	6.34	4.61	8.15
MnO	.07	.....	.36	.34	.14	.20
MgO	12.25	12.37	10.05	14.67	14.47	13.52
CaO	23.37	22.54	21.57	16.79	15.87	19.33
Na_2O	.47	trace	1.38	.19	.28	.33
K_2O	.12	trace	.12	.....	.....	.11
NiO	.05	.....	trace	.....	.....	trace
P_2O_5	none	.....	.....	.....	.....	.06
H_2O	.37	.....	.....	.18	.31	.20
	100.96	100.26	100.22	100.27	99.77	99.85

Augite is a common mineral in slags,[a] and is easily produced from its constituents by simple fusion.[b] It was repeatedly obtained by Fouqué and Lévy,[c] both by itself and in association with other minerals, in their classic experiments upon the synthesis of rocks. J. Morozewicz[d] also has found both ordinary augite and the alkaline varieties in the products yielded by his artificial magmas. The molecule RAl_2SiO_6 is generally formed from magmas containing over 50 per cent of silica; and its alumina appears to be the residue left over after the feldspars, feldspathoids, and micas have been satisfied.

When garnet, vesuvianite, or epidote is fused augitic minerals appear among the compounds produced.[e] Biotite and clinochlore also yield it among the products of their thermal decomposition.[f] C. Doelter[g] found that augite was formed when diopside was fused with alumina or ferric oxide; and from mixtures of silica with the proper bases he obtained crystals rich in RAl_2SiO_6. According to J. Lenarčič,[h] magnetite and labradorite, fused together, yield augite. So, too, does hedenbergite when fused with anorthite, albite,[i] or corundum.[j]

Several other minerals in addition to those already named are classed as pyroxenes, but they are too rare to need more than a passing mention here. The so-called zircon pyroxenes, rosenbuschite, låvenite, wöhlerite, and hiörtdahlite are found in the elæolite syenites of Norway. The triclinic babingtonite is interesting, for it contains, in addition to the molecular types found in the other pyroxenes, the

[a] See J. H. L. Vogt, Mineralbildung in Schmelzmassen, p. 34.
[b] For early syntheses, see Fouqué and Lévy, Synthèse des minéraux et des roches, p. 102.
[c] Op. cit., pp. 60, 67, 105.
[d] Min. pet. Mitth., vol. 18, pp. 107, 113, 120, 123, 124, 1898.
[e] C. Doelter, Allgem. chem. Mineralogie, pp. 182, 183.
[f] Doelter, Neues Jahrb., 1897, pt. 1, p. 1.
[g] Idem, 1884, pt. 2, p. 51.
[h] Centralbl. Min. Geol. Pal., 1903, pp. 705, 743.
[i] M. Vučnik, idem, 1904, pp. 300, 342.
[j] B. Vukits, idem, 1904, p. 705.

ferric silicate $Fe_2Si_3O_9$. It has been found not only as a natural mineral, but also as a furnace product in slag.[a]

Augite, among the pyrogenic minerals, is to be classed as one of the older secretions. It is common in igneous rocks of nearly all classes, and the pyroxenes in general are the most important of the so-called ferromagnesian minerals. Some rocks, the pyroxenites, consist of pyroxenes almost entirely; websterite, for instance, is formed of bronzite and diopside. The most striking alteration of pyroxene is into hornblende, but it also alters into tremolite,[b] chlorite, serpentine, talc, mica, garnet, epidote, and glauconite. The pyroxenes, furthermore, occur as important secondary minerals; sometimes as the product of contact metamorphism in limestones, sometimes as marginal zones derived from olivine.[c] Diallage and hypersthene rocks alter into amphibolites.[d]

NOTE.—For theoretical discussions upon the constitution of the pyroxenes, see G. Tschermak, Jahrb. K.-k. geol. Reichsanstalt, vol. 21, 1871, Min. pet. Mitth., p. 17. C. Doelter, Min. pet. Mitth., vol. 2, p. 193, 1879. F. W. Clarke, Bull. U. S. Geol. Survey No. 125, 1895. J. W. Retgers, Zeitschr. physikal. Chemie, vol. 16, p. 614, 1895. P. Mann, Neues Jahrb., 1884, pt. 2, p. 172. A. Merian, idem, Beil. Bd. 3, p. 252, 1884. The literature upon this subject is very voluminous.

THE AMPHIBOLES.

Anthophyllite.—Orthorhombic. Composition like enstatite or bronzite (MgFe) SiO_3, with the magnesium silicate predominating. Specific gravity, 3 to 3.2. Color, gray, brown, green, and intermediate shades. Hardness, 5.5 to 6. Gedrite is a variety containing usually more iron and much alumina. As an amphibole anthophyllite corresponds to hypersthene among the pyroxenes.[e]

Tremolite.—Monoclinic. Composition, $CaMg_3Si_4O_{12}$. Molecular weight, 370.1. Specific gravity, 2.9 to 3.1. Molecular volume, 123. Color, white to gray. Hardness, 5 to 6.

Actinolite.—Like tremolite, but with iron partly replacing magnesium. Specific gravity, 3 to 3.2. Nephrite is a compact variety of actinolite. True asbestos is a fibrous form of tremolite or actinolite; but anthophyllite and crocidolite are also found asbestiform. The Canadian asbestos of commerce is serpentine.[f]

---

[a] See L. Buchrucker, Zeitschr. Kryst. Min., vol. 18, p. 626, 1891.

[b] See H. Ries, Ann. New York Acad. Sci., vol. 9, p. 124, 1896–97, in an important memoir upon the pyroxenes of New York.

[c] See G. H. Williams, Am. Jour. Sci., 3d ser., vol. 31, p. 35, 1886, and F. D. Adams, Am. Naturalist, vol. 19, p. 1087, 1885. Williams gives a number of references to alterations of this kind.

[d] Williams, Am. Jour. Sci., 3d ser., vol. 28, p. 258, 1884.

[e] An iron anthophyllite, $FeSiO_3$, associated with the fayalite of Rockport, Massachusetts, has been described by C. H. Warren, Am. Jour. Sci., 4th ser., vol. 16, p. 337, 1903.

[f] See G. P. Merrill, Proc. U. S. Nat. Mus., vol. 18, p. 281, 1896, for a good summary of our knowledge of asbestos.

Cummingtonite.—Monoclinic, but with the composition of an anthophyllite containing much iron. Specific gravity, 3.1 to 3.3. Color, gray to brown.

The foregoing members of the amphibole group, except the aluminous gedrite, are most simply interpreted, like the corresponding pyroxenes, as mixtures of metasilicates of calcium, magnesium, and iron. Grünerite is the ferrous silicate, $FeSiO_3$ alone.[a] Dannemorite is a similar iron-manganese metasilicate. In richterite, which has a similar general formula, alkalies appear, up to 9 per cent or more. Many analyses of these minerals show the presence of water in them, and also of fluorine.

Anthophyllite and gedrite are essentially Archean minerals, occurring especially in hornblende gneisses and schists. Tremolite is found as an accessory mineral in metamorphic limestones and dolomites. Actinolite is also a mineral of the metamorphic rocks. In the iron regions near Lake Superior actinolite-magnetite schists are common.[b]

Anthophyllite, tremolite, and actinolite alter easily into talc, serpentine, and calcite. The reverse alteration, of talc into anthophyllite, has been reported by Genth.[c] Uralite, which has ordinarily the composition of actinolite, is an amphibole derived by alteration from similarly constituted pyroxenes.[d]

Hornblende.—Monoclinic. Composition variable, as with augite, of which hornblende is the equivalent among the amphiboles. Hornblende, however, contains a smaller proportion of lime and more magnesia plus iron than augite. It also contains aluminous silicates. The light-colored hornblende, with little iron, is called edenite. The darker varieties are known as pargasite. Specific gravity, 3.0 to 3.47, depending upon the proportion of iron. Color, white, gray, green, and brown, ranging to black. Hardness, 5 to 6.

The subjoined analyses of hornblende are given in the memoir by S. L. Penfield and F. C. Stanley.[e] They show the variability in composition of the mineral, and also the predominance of magnesium and iron over calcium, the reverse condition from that noted in augite.

Analyses of hornblende.

A. From Renfrew, Ontario. Stanley, analyst.
B. From Edenville, New York. Stanley, analyst.

---

[a] A. C. Lane and F. F. Sharpless (Am. Jour Sci., 3d ser., vol. 42, p. 505, 1891) have applied the name grünerite to a ferromagnesian amphibole like cummingtonite.

[b] See W. S. Bayley, Am. Jour. Sci., 3d ser., vol. 46, p. 176, 1893. Also C. R. Van Hise, C. K. Leith, and others, in Mon. U. S. Geol. Survey, vol. 28, 1897; vol. 43, 1903.

[c] Proc. Am. Phil. Soc., vol. 20, p. 393, 1882.

[d] On the theory of uralitization see L. Duparc and T. Hornung, Compt. Rend., vol. 139, p. 223, 1904.

[e] Am. Jour. Sci., 4th ser., vol. 23, p. 23, 1907.

C. From Cornwall, New York. J. L. Nelson, analyst.[a]
D. From Monte Somma, Italy. Stanley, analyst.
E. Basaltic hornblende, Bilin, Bohemia. Stanley, analyst.
F. From Grenville Township, Quebec, Stanley, analyst.

	A.	B.	C.	D.	E.	F.
SiO_2	43.76	41.99	36.86	39.48	39.95	45.79
TiO_2	.78	1.46	1.04	.30	1.68	1.20
Al_2O_3	8.33	11.62	12.10	12.99	17.58	11.37
Fe_2O_3	6.90	2.67	7.41	7.25	7.25	.42
FeO	10.47	14.32	23.35	10.73	2.18	.42
MnO	.50	.25	.77	1.00	trace	.39
MgO	12.63	11.17	1.90	11.47	14.15	21.11
CaO	9.84	11.52	10.59	12.01	11.96	12.71
K_2O	1.28	.98	3.20	2.39	1.98	1.69
Na_2O	3.43	2.49	1.20	1.70	3.16	2.51
H_2O	.65	.61	1.30	.76	.41	.67
F	1.82	.80	.27	.05	.03	2.76
Loss at 110°	.10	.08	.....	.12	.13	.....
	100.49	99.96	99.99	100.25	100.46	101.04
O=F	.76	.33	.11	.02	.01	1.16
	99.73	99.63	99.88	100.23	100.45	99.88

The synthesis of hornblende was first effected by K. Chrustschoff.[b] He heated a solution containing dialyzed silica, alumina, and ferric hydroxide, with some ferrous hydroxide, magnesium hydroxide, and lime water, for three months to 550° in a closed digester, and obtained crystals of amphibole. C. Doelter,[c] by using fluxes of low melting point, also succeeded in producing the mineral. A mixture of magnesia, oxide of iron, alumina, and silica, fused with boric acid, gave the desired result. He also succeeded in recrystallizing amphiboles from a flux of borax, or from one of magnesium chloride and calcium chloride; but in most of his experiments augite, sometimes with olivine, scapolite, magnetite, anorthite, or orthoclase, was produced. E. T. Allen, F. E. Wright, and J. K. Clement,[d] in the research already cited under pyroxene, found that when magnesium metasilicate was heated considerably above its melting point and then rapidly cooled, the orthorhombic amphibole was formed. With slow cooling, pyroxenes are produced. By heating the orthorhombic amphibole with water at 375° to 475°, it was transformed into the monoclinic modification. The latter was also obtained when solutions of magnesium ammonium chloride or of magnesium chloride and sodium bicarbonate were heated with sodium silicate or amorphous silica during three to six days at 375° to 475° in a steel bomb. Small quantities of quartz and of forsterite were formed at the same time.

According to A. Becker,[e] when anthophyllite or hornblende is fused, a pyroxene, sometimes with olivine, is formed. According to A.

[a] Am. Jour. Sci., 4th ser., vol. 15, p. 227, 1903. Fluorine determination added to Nelson's analysis by Stanley.
[b] Compt. Rend., vol. 112, p. 677, 1891.
[c] Neues Jahrb., 1897, pt. 1, p. 1.
[d] Am. Jour. Sci., 4th ser., vol. 22, p. 385, 1906.
[e] *Zeitschr.* Deutsch. geol. Gesell., vol. 37, p. 10, 1885.

Lacroix,[a] alterations, due to heat alone or to the action of molten magmas, of hornblende to augite, are common among the volcanic rocks of Auvergne. The amphiboles, in short, are unstable at high temperatures, and either the rapid cooling of a magma, the presence of water, or some undetermined influences of pressure, conditions their appearance as pyrogenic minerals. An excess of magnesia is also favorable to their development, while an excess of lime may determine the formation of pyroxene.

Common hornblende is very widely diffused, as in granite, syenite, diorite, diabase, gabbro, and norite, and in the metamorphic gneisses, hornblende schists, and amphibolites. The crystallized "basaltic hornblende" appears as an early secretion in andesite, dacite, phonolite, basalt, etc. Hornblende alters, not only into pyroxenes as mentioned above, but also into chlorite, epidote, biotite, siderite, calcite, and quartz. Pseudomorphs of hornblende or of anthophyllite after olivine have been described by F. Becke[b] and B. Kolenko.[c]

Ordinarily, the constitution of the hornblendes is supposed to be analogous to that of augite, metasilicates of the form $RSiO_3$ being isomorphously commingled with Tschermak's hypothetical compound, RAl_2SiO_6. It is also commonly assumed that the amphibole molecules are larger than those of the pyroxenes, as shown by the formulæ of diopside, $MgCaSi_2O_6$, and tremolite, $CaMg_3Si_4O_{12}$. The latter assumption, however, is not well grounded, for the amphiboles, as a rule, are lower in specific gravity than the corresponding pyroxenes, which indicates that their molecules are really less condensed. The true molecular weights are unknown; and it is quite possible that they are better represented by polymeric symbols, such as $R_8Si_8O_{24}$ in the pyroxene series and $R_4Si_4O_{12}$ for the amphiboles. The way in which the alkali pyroxenes alter into mixtures of orthosilicates and trisilicates offers an argument in favor of this view. In fact, G. F. Becker[d] has sought to explain the relations between the two groups of minerals upon the supposition that they are mixtures of the two classes of salts just named. There are still other interpretations of the hornblendes. R. Scharizer[e] regards them as mixtures of actinolite with an orthosilicate isomeric with garnet, $R''_3R'''_2Si_3O_{12}$, to which he has given the name "syntagmatite." A hornblende from Jan Mayen Island agrees very nearly with the supposed syntagmatite in composition. F. Berwerth[f] also assumes the presence

[a] Minéralogie de la France, vol. 1, pp. 668–669, 1893–1895.
[b] Min. pet. Mitth., vol. 4, p. 450, 1882.
[c] Neues Jahrb., 1885, pt. 2, p. 90.
[d] Am. Jour. Sci., 3d ser., vol. 38, p. 154, 1889. See also F. W. Clarke, Bull. U. S. Geol. Survey No. 125, 1895.
[e] Neues Jahrb., 1884, pt. 2, p. 143.
[f] Sitzungsb. Akad. Wien, vol. 85, pt. 1, p. 153, 1882. See also H. Haefcke, Doct. Diss., Göttingen, 1890.

of orthosilicates in the hornblendes, and attributes part of their alumina to molecules, which are either those of micas or isomeric with them. Another portion of the alumina he regards as forming the metasilicate $Al_2Si_3O_9$, a compound which is not known to occur by itself in nature. An alkali hornblende from Piedmont, described by F. R. Van Horn,[a] has very nearly orthosilicate ratios; and so also has a variety from Dungannon, Ontario, studied by F. D. Adams and B. J. Harrington.[b] Some hornblendes, however, contain a larger proportion of oxygen than orthosilicates require; and to explain their constitution it is necessary to assume the existence of basic salts—a condition which is fulfilled by the molecule RAl_2SiO_6. The synthesis of such a compound, or its discovery as an actual mineral would go far toward settling the constitution of this important group.[c]

Glaucophane.—Monoclinic. Normally $NaAlSi_2O_6.(FeMg)SiO_3$, but variable amounts of the calcium metasilcate may be present also. Color, blue, bluish black, or grayish. Specific gravity, 3 to 3.1. Hardness, 6 to 6.5.

Riebeckite.—Monoclinic. Composition, $2NaFeSi_2O_6.FeSiO_3$. Color, black.

Crocidolite.—Composition, $NaFeSi_2O_6.FeSiO_3$. Resembles riebeckite. Molecular weight, 364.1. Specific gravity, 3.2 to 3.3. Molecular volume, 112. Asbestiform. Color, dark blue, sometimes greenish or nearly black. Hardness, 4.

Several other amphiboles related to the three species described above have been given independent names. Rhodusite, described by H. B. Foullon,[d] is an asbestiform variety of glaucophane in which aluminum has been replaced by ferric iron. Crossite, from California, according to C. Palache,[e] is intermediate between riebeckite and glaucophane.

Arfvedsonite.—Monoclinic. The composition is approximately $4Na_2SiO_3+13FeSiO_3+3CaSiO_3+Fe''Al_2SiO_6$, but probably variable. Specific gravity, 3.45. Color, black. Hardness, 6.

Barkevikite.—Intermediate between arfvedsonite and hornblende.[f] Color, black. Specific gravity, 3.43.

---

[a] Am. Geologist, vol. 21, p. 370, 1898.

[b] Am. Jour. Sci., 4th ser., vol. 1, p. 210, 1896. "Hastingsite."

[c] An interpretation of the amphiboles quite different from that of Tschermak has been proposed by S. L. Penfield and F. C. Stanley, Am. Jour. Sci., 4th ser., vol. 23, p. 23, 1907. They assume the existence of bivalent molecules, Al_2OF_2, $Al_2O(OH)_2$, Al_2O_3R'', and $Al_2O_4R''Na_2$, and also the univalent group MgF, in order to account for fluorine, water, and alumina. All of the amphiboles are then formulated as polymetasilicates.

[d] Sitzungsb. Akad. Wien, vol. 100, pt. 1, p. 176, 1891.

[e] Bull. Dept. Geology, Univ. California, vol. 1, p. 181, 1894.

[f] For a discussion of the composition of barkevikite, see W. C. Brögger, Zeitschr. Kryst. Min., vol. 16, p. 412, 1890.

Ænigmatite.—Triclinic. Essentially a metasilicate of sodium and ferrous iron, but with titanium replacing a part of the silicon, and a small admixture of the basic salt RFe'''_2SiO_6.[a] Specific gravity, 3.80. Color, black.

Among these alkali amphiboles, glaucophane and riebeckite are the most important. They are partly, although not absolutely, the equivalent of jadeite and acmite among the pyroxenes, but differ from them chemically in containing the molecules $FeSiO_3$ and $MgSiO_3$ in addition to the aluminous compounds. None of them has been prepared synthetically, and, like the other amphiboles, they yield pyroxenes upon fusion.[b]

Glaucophane occurs chiefly in a series of glaucophane schists and in eclogite.[c] It has also been observed in some eruptive rocks. It alters into chlorite, feldspar, and hematite.[d] Riebeckite is found in granites and syenites; crocidolite also occurs in granite and in quartz schist. By oxidation of the iron and infiltration of silica, crocidolite alters into the beautiful ornamental stone known as "tiger-eye." Riebeckite is reported as altering to epidote.[e]

Arfvedsonite and barkevikite occur chiefly in augite and elæolite syenites, also in a granite. Ænigmatite is known chiefly from the sodalite syenite of Greenland; but cossyrite, which is probably the same mineral, was found in a rhyolite lava. Arfvedsonite alters into acmite and lepidomelane,[f] and so also does barkevikite.[g]

THE OLIVINE GROUP.

Forsterite.—Orthorhombic. Composition, Mg_2SiO_4. Molecular weight, 141.4. Specific gravity, 3.2. Molecular volume, 44.2. Color, white, often tinted yellowish, greenish, or gray. Hardness, 6 to 7.

Fayalite.—Orthorhombic. Composition, Fe_2SiO_4. Molecular weight, 204.4. Specific gravity, 4 to 4.14. Molecular volume, 49.8. Color, yellow to brown and black. Hardness, 6.5.

---

[a] See Brögger, op. cit., pp. 428–429. See also J. Soellner, Neues Jahrb., Beil. Bd. 24, p. 475, 1907, who has described a new mineral, rhoenite, allied to ænigmatite.

[b] See Brögger, op. cit., p. 410, with reference to arfvedsonite. C. Doelter (Min. pet. Mitth., vol. 10, p. 70, 1888) fused glaucophane with sodium fluoride and magnesium fluoride and obtained a product resembling acmite.

[c] See K. Oebbeke, Zeitschr. Deutsch. geol. Gesell., vol. 38, p. 634, 1886, for a summary of occurrences and bibliography. Also H. S. Washington, Am. Jour. Sci., 4th ser., vol. 11, p. 35, 1901; G. F. Becker, Mon. U. S. Geol. Survey, vol. 13, p. 102, 1888; and H. Rosenbusch, Sitzungsb. Akad. Berlin, 1898, p. 706. Washington's memoir is very full. On the glaucophane rocks of California, see J. P. Smith, Proc. Am. Phil. Soc., vol 45, p. 183, 1907.

[d] L. Colomba, Zeitschr. Kryst. Min., vol. 26, p. 215, 1896.

[e] On riebeckite rocks, see G. T. Prior, Min. Mag., vol. 12, p. 92, 1889; P. Termier, Bull. Soc. min., vol. 27, p. 265, 1904; G. M. Murgoci, Am. Jour. Sci., 4th ser., vol. 20, p. 133, 1905. According to Murgoci, riebeckite forms only from persilicic magmas. Riebeckite rocks from Oklahoma are described by A. F. Rogers in Jour. Geol., vol. 15, p. 283, 1907.

[f] W. C. Brögger, Zeitschr. Kryst. Min., vol. 16, pp. 407–410, 1900; also N. V. Ussing, idem, vol. 26, p. 104, 1896.

[g] Brögger, op. cit., pp. 418–422.

Forsterite and fayalite are two minerals which, rare by themselves, are very common in isomorphous mixture. The usual mixture, in which the magnesium salt predominates, is known as olivine, chrysolite, or peridot. A variety containing a large amount of iron is called hyalosiderite. Hortonolite is another member of the group, containing much iron, less magnesia, and about 4.5 per cent of manganese oxide. The compound Mn_2SiO_4 occurs as tephroite, and roepperite is a variety containing zinc. Knebelite is intermediate between fayalite and tephroite. All of these minerals are represented by the general orthosilicate formula R_2SiO_4. Titanic oxide, up to 5 per cent or more, may replace a part of the silica in olivine, forming a variety to which the name titanolivine has been given.[a]

Monticellite.—Orthohombic. Composition, $MgCaSiO_4$. Molecular weight, 188.9. Specific gravity, 3 to 3.25. Molecular volume, 61. Colorless to yellowish, greenish, or gray. Hardness, 5 to 5.5. The very rare glaucochroite, $CaMnSiO_4$, is analogous to monticellite in composition.

The members of the olivine group are easily prepared by artificial means, and are of common occurrence in slags.[b]

The first intentional synthesis of olivine was effected by Berthier,[c] by simply fusing its constituent oxides together. Fouqué and Lévy[d] also obtained it by fusing silica and magnesia with ferrous ammonium sulphate. In their synthesis of basalt[e] they observed olivine among the earliest crystallizations from the magma. J. J. Ebelmen[f] prepared forsterite by fusing a mixture of boric oxide, silica, and magnesia. In this case the boric oxide simply serves as a solvent of relatively low melting point, from which the synthetic mineral crystallizes just as ordinary salts crystallize from solution in water. A. Daubrée[g] obtained olivine by recrystallization from fused meteorites, magnesian eruptive rocks, and serpentine. He also[h] prepared mixtures of olivine and metallic iron, resembling certain meteorites, by partial oxidation of an iron silicide and subsequent fusion of the product. G. Lechartier[i] fused silica and magnesia with calcium

[a] See A. Damour, Bull. Soc. min., vol. 2, p 15, 1879; and L. Brugnatelli, Zeitschr. Kryst. Min., vol. 39, p. 209, 1904.

[b] See Fouqué and Lévy, Synthèse des minéraux et des roches, p. 96; L. Bourgeois, Reproduction artificielle des minéraux, pp. 108–110; Vogt, Mineralbildung in Schmelzmassen, p. 8. A. Stelzner and H. Schulze (Neues Jahrb., 1882, pt. 1, p. 170) have described a slag containing a zinc-bearing fayalite; and H. Laspeyres (Zeitschr. Kryst. Min., vol. 7, p. 494, 1883) has reported another furnace product having the composition $MnFe_3Si_2O_8$.

[c] Cited by Fouqué and Lévy, op. cit., p. 97.

[d] Bull. Soc. min., vol. 4, p. 279, 1881.

[e] Compt. Rend., vol. 92, p. 367, 1881.

[f] Ann. chim. phys., 3d ser., vol. 33, p. 56, 1851.

[g] Compt. Rend., vol. 62, pp. 200, 369, 660, 1866.

[h] Études synthétiques de géologie expérimentale, p. 524.

[i] Compt. Rend., vol. 67, p. 41, 1868.

chloride, and P. Hautefeuille[a] operated with the same oxides and magnesium chloride. Olivine was produced in both cases when the oxides were in the proper proportions. By varying the proportions enstatite or enstatite and olivine together were formed. S. Meunier,[b] by heating magnesium vapor to redness in a mixture of water vapor and silicon chloride, obtained both olivine and enstatite. Fayalite was prepared by A. Gorgeu,[c] who heated ferrous chloride with silica to redness in a stream of moist hydrogen. Olivine is also formed, according to C. Doelter,[d] when hornblende is fused with calcium and magnesium chlorides, and is among the products of fusion of biotite, vesuvianite, tourmaline, clinochlore, and some garnets. Forsterite was obtained by E. T. Allen, F. E. Wright, and J. K. Clement,[e] incidentally to their preparation of magnesian pyroxenes.

Olivine is an essential pyrogenic constituent of many eruptive rocks, such as peridotite, norite, basalt, diabase, and gabbro. Dunite is a rock consisting of olivine alone, or at most accompanied by trivial amounts of accessories. Since olivine, fused with silica, yields enstatite, it can occur normally only in rocks low in silica. As the latter increases in amount, pyroxenes take its place. Olivine, however, sometimes appears abnormally, as a minor accessory, in highly siliceous rocks like trachyte and andesite. Fayalite, for instance, was found by J. P. Iddings,[f] associated with tridymite in lithophyses of rhyolite and obsidian in the Yellowstone Park. A similar occurrence in the Lipari Islands is reported by Iddings and S. L. Penfield.[g] At Rockport, Massachusetts, fayalite has been found in granite.[h] Olivine is also a common constituent of meteorites, and is often conspicuously associated with metallic iron. As products of thermal metamorphism olivine and forsterite are found in limestones and dolomites, frequently accompanied by spinel.[i] The boltonite of Bolton, Massachusetts, is an occurrence of this kind.

The members of the olivine group all undergo alteration with extreme facility. The typical alteration of peridotite rocks is into serpentine. By further changes, magnetite, magnesite, hydromagnesite, brucite, calcite, opal, and quartz may be formed. By oxidation of the iron silicate, limonite is produced. P. von Jereméef[j] has described pseudomorphs of talc, serpentine, and epidote after olivine. The olivine was first transformed to serpentine, that into epidote, and

[a] Ann. chim. phys., 4th ser., vol. 4, p. 129, 1865.
[b] Compt. Rend., vol. 93, p. 737, 1881.
[c] Idem, vol. 98, p. 920, 1884.
[d] Min. pet. Mitth., vol. 10, p. 67, 1888; and Neues Jahrb, 1897, pt. 1, p. 1.
[e] Am. Jour. Sci., 4th ser., vol. 22, p. 385, 1906.
[f] Idem, 3d ser., vol. 30, p. 58, 1885.
[g] Idem, vol. 40, p. 75, 1890.
[h] See S. L. Penfield and E. H. Forbes, Am. Jour. Sci., 4th ser., vol. 1, p. 129, 1896.
[i] See C. T. Clough and W. Pollard, Quart. Jour. Geol. Soc., vol. 55, p. 372, 1899.
[j] Zeitschr. Kryst. Min., vol. 32, p. 430, 1900.

that finally into talc and clay. Pseudomorphs of hornblende after olivine are recorded by F. Becke[a] and B. Kolenko.[b] By a reaction between olivine and feldspar, according to R. Brauns,[c] a pyroxene can be formed. Monticellite alters into serpentine and pyroxene; and C. H. Warren[d] found a ferrous anthophyllite, $FeSiO_3$, derived from the fayalite of Rockport.

THE MICAS.

Muscovite.—Monoclinic. Composition normally $Al_3KH_2Si_3O_{12}$. Molecular weight, 399.6. Specific gravity, 2.85. Molecular volume, 140. Colorless when pure, but usually tinted slightly by impurities. Hardness, 2 to 2.5.

Some varieties of muscovite differ from the normal compound in containing a higher proportion of silica. These all represent admixtures of the isomorphous trisilicate $Al_3KH_2Si_9O_{24}$. Fuchsite is a muscovite containing small amounts of chromium, replacing aluminum. Baddeckite[e] appears to be a muscovite containing much ferric iron, due to admixtures of the compound $Fe_3KH_2Si_3O_{12}$. F. W. Clarke and N. H. Darton[f] have described an altered mica which seems to be derived in part from the same ferric salt. Roscoelite is similar, but with nearly two-thirds of the aluminum replaced by vanadium.[g] Sericite, margarodite, damourite, gilbertite, etc., are muscovites of secondary origin.

Paragonite.—Monoclinic. A sodium mica, $Al_3NaH_2Si_3O_{12}$, corresponding to muscovite. Molecular weight, 383.5. Specific gravity, 2.9. Molecular volume, 132.2. Color, like muscovite. Hardness, 2.5 to 3.

Lepidolite.—Monoclinic. A lithia-bearing mica of variable composition. In most cases a mixture of a fluoriferous trisilicate, $AlF_2.Si_3O_8.R'_3$, in which $R'=(Li,K)$, with molecules of the muscovite type. Color commonly rose-red or lilac, but also white, gray, or brown. Specific gravity, 2.8 to 2.9. Cookeite, $Al(OH)_2.Si_3O_{12}.R'_3$, is probably a derivative, by hydration, of lepidolite; but it may be an alteration of tourmaline. Polylithionite is another lithia mica in which the ratio Si : O is entirely trisilicate. The separate existence of such a compound among the micas sheds much light upon their constitution; but of that, more later. Zinnwaldite and cryophyllite are other lithia micas containing iron and intermediate in composition between lepidolite and the ferruginous biotites. Lepidolite is

[a] Min. pet. Mitth., vol. 4, p. 450, 1882.
[b] Neues Jahrb., 1885, pt. 2, p. 90.
[c] Idem, 1898, pt. 2, p. 79.
[d] Am. Jour. Sci., 4th ser., vol. 16, p. 337, 1903.
[e] G. C. Hoffman, Ann. Rept. Geol. Survey Canada, vol. 9, p. 11 R, 1896.
[f] Bull. U. S. Geol. Survey No. 167, p. 154, 1900.
[g] F. W. Clarke, idem, p. 73.

found chiefly, if not exclusively, in albitic pegmatite veins and has little significance as a rock-forming mineral.

Biotite.—Monoclinic. Normal composition, $Al_2Mg_2KHSi_3O_{12}$, but with admixtures of the corresponding ferric and ferrous salts in variable proportions. Molecular weight of the normal biotite, 420.3. Specific gravity, 2.7. Molecular volume, 155.6. The specific gravity of the iron biotites may reach 3.1. That is the density of siderophyllite, which is very near to the normal ferrous biotite in composition and has a molecular volume of 155.9. There are also biotites containing small amounts of chromium, barium, manganese, etc. Color, in biotite generally, green to black, rarely white, sometimes yellow to brown. Hardness, 2.5 to 3.

Phlogopite.—Monoclinic. Composition variable; typical phlogopite approximates to $AlMg_3KH_2Si_3O_{12}$. Usually contains a low proportion of water and some fluorine; also iron in small quantities. Normal molecular weight, 418.6. Specific gravity, 2.75. Molecular volume, 152.2. Color, brown, yellowish, reddish, greenish, sometimes white. Hardness, 2.5 to 3. Betweeen phlogopite and biotite there are many intermediate mixtures; and the varieties containing much ferric iron are known as lepidomelane. The ratios of the latter are commonly near those of biotite.

Chloritoid.—Monoclinic.[a] Composition, $Al_2Fe''H_2SiO_7$; being a very basic orthosilicate. Some magnesia or manganese may replace a part of the iron. Molecular weight, 252.5. Specific gravity, 3.45. Molecular volume, 73.2. Color, gray, greenish gray, and grayish or greenish black. Hardness, 6.5. Ottrelite, which is an important constituent of some schists, is probably the trisilicate corresponding to chloritoid, $Al_2FeH_2Si_3O_{11}$. These minerals, together with margarite, seybertite, and xanthophyllite, form the clintonite group, or so-called brittle micas. They are all foliated, micaceous minerals, extremely basic, and free from alkalies. The true ferromagnesian micas often contain admixtures of these basic molecules.

Although muscovite is very simple in its constitution, the other micas, including the clintonite series, are quite complex. Just as in the pyroxene and amphibole groups, we have to deal with isomorphous mixtures of different salts, which vary not only to some extent in type, but also in their "replacements" of aluminum by iron or chromium, potassium and hydrogen by sodium or lithium, and magnesium by iron or manganese. In some of the brittle micas calcium also appears, and in lepidolite and phlogopite the equivalency of hydroxyl and fluorine has to be taken into account. Furthermore, the ferromagnesian micas are highly alterable by hydration; and it is not always possible to be certain whether a change of that order may not have

[a] Triclinic according to H. F. Keller and A. C. Lane, Am. Jour. Sci., 3d ser., vol. 42, p. 499, 1891.

begun. In spite of all difficulties, however, the micas can be expressed by a small number of generalized formulæ, which are all derivable from one general type, as follows:

Muscovite, $R'''_3R'_3(SiO_4)_3$ and $R'''_3R'_3(Si_3O_8)_3$.
Biotite, $R'''_3R''_2R'_2(SiO_4)_3$ and $R'''_2R''_2R'_2(Si_3O_8)_3$.
Phlogopite, $R'''_1R''_3R'_3(SiO_4)_3$ and $R'''_1R''_3R'_3(Si_3O_8)_3$.

To these must be added two basic types, namely, $R'''F_2.Si_3O_8.R'_3$ in lepidolite, zinnwaldite, and some phlogopites, and the clintonite molecule $R'''O_2R''.Si_3O_8.R'_3$, with its orthosilicate equivalent $R'''O_2R''.SiO_4.R'_3$. To each of these forms a known mica corresponds, so that the expressions involve no assumptions of hypothetical molecules. In G. Tschermak's theory of the mica group,[a] hypothetical compounds are invoked with which no actual micas agree.

Several syntheses of mica have been reported, but they are not altogether satisfactory, for the reason that the products obtained were not, except in one instance, verified by analysis. Unfortunately, a large proportion of the work so far done in synthetic mineralogy has been purely qualitative, and therefore incomplete. A substance may be micaceous, and yet a different thing from any natural member of the mica group. The true micas, as a rule, are hydrous minerals; water is one of their essential constituents; syntheses by igneous methods, at ordinary pressures, are therefore to be regarded with suspicion. Some phlogopites are nearly anhydrous, however, and it would be unwise to condemn the reported syntheses without further investigation. The magnesian mica, described and partly analyzed by J. H. L. Vogt,[b] from the slags of the Kafveltorp copper works in Sweden, may have been a phlogopite of the type just indicated, with its hydrogen replaced by some other monad radicle. To Fouqué and Lévy's[c] synthesis of a mica trachyte, the objections just cited do not apply. They heated a powdered granitic glass with a little water, under pressure, and for a long time, to redness, and obtained an artificial rock in which scales of mica were visible. In this synthesis water played a distinct part.

By the prolonged heating of andalusite with a solution of potassium carbonate and potassium fluoride at 250°, C. Doelter[d] obtained scales of white mica. This transformation is instructive, for andalusite alters into muscovite quite readily. P. Hautefeuille and L. P. de Saint-Gilles[e] fused the constituents of an iron mica with potassium silicofluoride and found crystals resembling mica in their product. K. Chrustschoff's[f] work was more definite. He fused a mixture

[a] Zeitschr. Kryst. Min., vol. 2, p. 14, 1878; vol. 3, p. 122, 1879.
[b] Berg. u. Hüttenm. Zeitung, vol. 47, p. 197.
[c] Compt. Rend., vol. 113, p. 283, 1891.
[d] Allgem. chem. Mineralogie, p. 207.
[e] Compt. Rend., vol. 104, p. 508, 1887.
[f] Min. pet. Mitth., vol. 9, p. 55, 1887.

equivalent to a mica basalt with the fluorides of sodium, aluminum, and magnesium, and also with potassium silicofluoride. After very slow cooling, the mass contained a micaceous mineral, which was separated and analyzed. It was essentially an anhydrous biotite. J. Morozewicz [a] added about 1 per cent of tungstic acid to a mixture having the composition of rhyolite, and obtained, after prolonged fusion and slow cooling, tables of biotite.

C. Doelter,[b] in a series of memoirs, reports the formation of micas by the fusion of various natural silicates with fluorides. Hornblende, augite, pyrope, almandite, and grossularite, fused with sodium fluoride and magnesium fluoride, yielded, among other products, biotite. It must, however, have been a sodium biotite, for the materials used seem to have contained no potassium. Glaucophane treated in the same way gave a phlogopite. Leucite, with sodium or potassium fluoride, was converted into an alkali mica and with magnesium fluoride yielded biotite. Andalusite, heated to redness with potassium silicofluoride and aluminum fluoride, gave muscovite, and when lithium carbonate was added to the mixture a lithia mica was obtained. An artificial mixture corresponding to $KAlSiO_4+Mg_2SiO_4$, fused with sodium and magnesium fluoride, also formed biotite. From other mixtures he produced muscovite, phlogopite, and an iron mica. None of these products seems to have been analyzed, and as their generation is ascribed to presumably anhydrous materials, it is probable that they were analogous to rather than identical with the natural micas. Possibly they were micas containing fluorine in place of hydroxyl. In nearly all the reported syntheses of mica fluorides have played an important part, but their exact function is unknown.

Primary muscovite is essentially a mineral of the deep-seated rocks, especially of the granites and quartz porphyries. It is never found in recent eruptives. From its water content we may infer that it was formed under pressure. Muscovite is also abundant in mica schist, and paragonite is similarly found in a paragonite schist. As an alteration product of other minerals muscovite is very common. Feldspar, topaz, andalusite, kyanite, nephelite, spodumene, the scapolites, and various other silicates alter readily into mica. Pinite and several other pseudomorphous minerals of like character consist of muscovite more or less impure. Lepidolite is probably in many cases secondary after muscovite, for it often forms margins upon plates of the latter mineral. Cryophyllite forms similar margins upon lepidomelane.

Biotite is an important constituent of many massive igneous rocks, such as granite, syenite, diorite, trachyte, andesite, mica basalt, etc.

[a] Neues Jahrb., 1893, pt. 2, p. 48.
[b] Idem, 1888, pt. 2, p. 178; 1897, pt. 1, p. 1. Also Min. pet. Mitth., vol. 10, p. 67, 1888.

It forms among the earliest secretions, immediately following the ores, apatite and zircon. It is sometimes altered by magmatic corrosion to a mixture of augite and magnetite.[a] Pressure seems to condition its formation. Phlogopite occurs chiefly in granular Archean limestones and in serpentine; but W. Cross[b] has described it as a constituent of a peculiar igneous rock, wyomingite. Chloritoid and ottrelite are found only in phyllitic schists,[c] and are of minor importance.

Muscovite, under ordinary conditions, is one of the least alterable of minerals. The feldspar of a granite may be completely kaolinized, while the embedded plates of mica retain their brilliancy almost unchanged. By treatment with aqueous reagents at 500°, however, C. and G. Friedel[d] transformed muscovite into nephelite, sodalite, leucite, orthoclase, and anorthite. Upon fusion, according to C. Doelter,[e] muscovite breaks up into leucite, glass, and a substance resembling nephelite. Lepidolite and zinnwaldite behave in a similar manner. W. Vernadsky[f] observed corundum and sillimanite among the fusion products of mica. From the composition of muscovite a splitting up into water, leucite, and sillimanite may be inferred, according to the equation—

$$Al_3KH_2Si_3O_{12}=AlKSi_2O_6+Al_2SiO_5+H_2O;$$

and with this the reported derivation of muscovite from leucite can be correlated.[g] Biotite, according to Doelter, yields no leucite upon fusion, but breaks up into olivine and spinel, with other less completely identified substances. On the other hand, H. Bäckström[h] fused biotite and found olivine, leucite, a little spinel, and glass to be the substances formed by its decomposition.

Unlike muscovite, biotite and phlogopite alter easily, and pass into a series of apparently indefinite substances known as "vermiculites." The change, however, is very simple, and consists merely in the replacement of the alkaline metals by hydrogen, with assumption of additional, loosely combined water. From the typical ferromagnesian micas the following derivatives are thus formed:

From $Al_2Mg_2KHSi_3O_{12}$------$Al_2Mg_2H_2Si_3O_{12}.3H_2O$.
From $AlMg_2KH_2Si_3O_{12}$------$AlMg_3H_3Si_3O_{12}.3H_2O$.

From any mixture of biotite and phlogopite molecules the corresponding hydrated mixture may be generated. These compounds, so simply related to the parent substances, form a series intermediate

[a] For a discussion of this alteration, see H. S. Washington, Jour. Geol., vol. 4, p. 257, 1896.

[b] Am. Jour, Sci., 4th ser., vol. 4, p. 115, 1897.

[c] See A. Cathrein, Min. pet. Mitth., vol. 8, 1887, p. 331; and L. van Werveke, Neues Jahrb., 1885, pt. 1, p. 227.

[d] Compt. Rend., vol. 110, p. 1170, 1890.

[e] Neues Jahrb., 1897, pt. 1, p. 1.

[f] Cited by Morozewicz, Min. pet. Mitth, vol. 18, p. 26, 1898.

[g] *See Doelter's* experiment, cited above.

[h] *Geol. Fören. Förhandl.*, vol. 18, p. 162, 1896.

between the micas and the chlorites and mark a transition into the latter group of minerals, which will be considered next in order.[a]

THE CHLORITES.

Under this general name a considerable number of minerals are embraced which are closely related to the micas. They are, however, much more basic, highly hydrated, and free from alkalies. They are silicates of aluminum or ferric iron, with magnesium or ferrous iron, and resemble the micas crystallographically as well as in the scaly or foliated habit which they commonly assume. The following species are recognized by Dana,[b] who assigns to them the annexed empirical formulæ:

Clinochlore	$H_8(Mg,Fe)_5Al_2Si_3O_{18}$.
Penninite	$H_8(Mg,Fe)_5Al_2Si_3O_{18}$.
Prochlorite	$H_{40}(Fe,Mg)_{23}Al_{14}Si_{13}O_{80}$.
Corundophilite	$H_{20}(Fe,Mg)_{11}Al_5Si_6O_{45}$.
Daphnite	$H_{56}Fe_{27}Al_{29}Si_{18}O_{121}$.
Cronstedtite	$H_6(Fe,Mg)_3Fe'''_2Si_2O_{13}$.
Thuringite	$H_{16}Fe_5(Al,Fe)_3Si_4O_{41}$.
Stilpnomelane	
Strigovite	$H_4(Fe,Mn)_2(Fe,Al)_2Si_2O_{11}$.
Diabantite	$H_{18}(Mg,Fe)_{12}Al_4Si_9O_{45}$.
Aphrosiderite	$H_{10}(Fe,Mg)_6Al_4Si_4O_{25}$.
Delessite	$H_{10}(Mg,Fe)_4Al_4Si_4O_{22}$.
Rumpfite	$H_{28}Mg_7Al_{10}Si_{10}O_{65}$.

To these may be added the more or less uncertain minerals amesite, metachlorite, klementite, chamosite, epichlorite, etc.

None of the formulæ given above are fixed and definite, for each of the many "chlorites" is variable in composition. The minerals, like the ferromagnesian micas, are mixtures of compounds, and several attempts to disentangle their components have been made.[c] The simplest and most natural interpretation of the chlorites represents them as formed from a series of compounds parallel with those identified in the micas and vermiculites, according to the following scheme:

Normal micas.	*Vermiculites.*	*Normal chlorites.*
$Al_3KH_2(SiO_4)_3$.	----------	----------
$Al_2Mg_2KH(SiO_4)_3$.	$Al_2Mg_2H_2(SiO_4)_3.3H_2O$.	$Al_2(MgOH)_4H_2(SiO_4)_3$.
$AlMg_3KH_2(SiO_4)_3$.	$AlMg_3H_3(SiO_4)_3.3H_2O$.	$Al(MgOH)_6H_3(SiO_4)_3$.
$AlO_2Mg.SiO_4.R'_3$.	$AlO_2Mg.SiO_4R'_3.3H_2O$.	$AlO_2Mg.SiO_4.R'_3$.

[a] On the alteration products of the magnesian micas, see E. Zschimmer, Jenaische Zeitschr., vol. 32, p. 551, 1898. On the action of water upon micas, A. Johnstone, Quart. Jour. Geol. Soc., vol. 45, p. 363, 1889. For analyses of vermiculites, see E. S. Dana, System of Mineralogy, 6th ed., pp. 664–668; also F. W. Clarke and E. A. Schneider, Bull. U. S. Geol. Survey No. 78, 1891; Bull. No. 90, 1892. The earlier papers of J. P. Cooke and F. A. Genth are also important.

[b] System of Mineralogy, 6th ed., p. 643.

[c] See G. Tschermak, Sitzungsb. Akad. Wien, vol. 99, pt. 1, p. 174, 1890; vol. 100, pt. 1, p. 29. R. Brauns, Neues Jahrb., 1894, pt. 1, p. 205, and Chemische Mineralogie, p. 221. F. W. Clarke, Bull. U. S. Geol. Survey No. 125, p. 53, 1895. An earlier discussion by Clarke, on different lines, is given in Bull. U. S. Geol. Survey No. 113, p. 11, 1893.

On this basis the relations between the several series are clear and in accord with the natural occurrences of the minerals. In penninite and clinochlore we have varying mixtures of the first and second chloritic types, just as among the micas we find examples intermediate between biotite and phlogopite. Prochlorite appears to be a derivative of the last molecule, having the formula—

$$AlO_2R'.SiO_4.(R''OH)H_2,$$

in which R'' is partly Fe and partly Mg.[a]

It is obvious, from their hydrous character, that the chlorites can not form as pyrogenic minerals. They are always of secondary origin; and when they appear in volcanic rocks it is as the result of hydrothermal alteration. Almost any aluminous ferromagnesian mineral may yield a chlorite in this way. Augite, hornblende, biotite, vesuvianite, epidote, tourmaline, or garnet may be the parent mineral.[b]

When a magnesian chlorite, such as clinochlore, is strongly ignited, it breaks down into a soluble and an insoluble portion, and the latter has the composition of spinel.[c] This fact is strong evidence against Tschermak's theory of the chlorite group, in which the normal series is regarded as formed by mixtures of serpentine, $H_4Mg_3Si_2O_9$, with amesite, $H_4Mg_2Al_2SiO_9$. For serpentine, on ignition, splits up into water, olivine, and enstatite, and the last-named mineral does not appear among the decomposition products of clinochlore. The latter, therefore, contains no serpentine, and the theory which assumes its presence falls to the ground. C. Doelter[d] reports spinel, olivine, and augite as formed by the fusion of clinochlore; but the experiments conducted in the laboratory of this Survey exclude the insoluble augite from the list of probabilities.

Chlorites are abundant among the metamorphic schists, chlorite schist being the commonest occurrence. An interesting metamorphosis of such a rock, a phyllite containing approximately 75 per cent of muscovite with 25 of chlorite, is reported by K. Dalmer.[e] With almost no change of composition, other than loss of water, it was transformed into a mixture of andalusite and biotite.

THE MELILITE GROUP.

[illegible] Tetragonal. The composition is uncertain, but near $X(Ca,Na)_2(X,Al)_2O_7$, with Fe replacing some X, and Mg or Na replacing a part of the Ca. The material is very variable in composition. Spe-

[a] [illegible] Survey No. 125. [illegible]

[b] [illegible] see J. Lemberg. [illegible]

[c] [illegible] Survey No. [illegible], pp. 27–33, 1883. [illegible]

[d] [illegible]

cific gravity, 2.9 to 3.1. Hardness, 5. Color, white, yellow, greenish yellow, brown.

Gehlenite.—Tetragonal. The normal composition is probably $Al_2Ca_3Si_2O_{10}$. Corresponding molecular weight, 391.3. Specific gravity, 3. Molecular volume, 130.4. Hardness, 5.5 to 6. Color, grayish green to brown.

Åkermannite.—Tetragonal. Composition, $Ca_4Si_3O_{10}$, with replacements of some Ca by Mg, Fe, or Mn. Only known in slags; not as a separately discovered natural mineral.[a]

These three isomorphous silicates are closely related to one another. J. H. L. Vogt[b] regards gehlenite and åkermannite as the two independent species, which, isomorphously commingled, form the variable melilite. This view is plausible, but is not yet universally accepted. It is not at all certain that ideally pure melilite or gehlenite has been found and analyzed. Furthermore, although melilite is a pyrogenic mineral characteristic of certain eruptive rocks, natural gehlenite has been found only as a product of contact metamorphism in limestones. If gehlenite were a constituent of melilite, we should expect to find igneous rocks in which it appeared as an essential component, or at least as a conspicuous accessory.

Both melilite and gehlenite are common minerals in slags,[c] and both have been prepared synthetically. An artificial melilite basalt was prepared by J. Morozewicz,[d] and the mineral was also found by Fouqué and Lévy[e] among the constituents of some of their synthetic rocks. In Morozewicz's preparation the melilite was accompanied by augite, plagioclase, olivine, corundum, and spinel. Melilite and feldspar were the last silicates to crystallize from the magma. F. Fouqué[f] has shown that melilite is formed when an augite andesite or a basalt is fused with lime, and he gives analyses of two products thus obtained. G. Bodländer[g] found melilite in a sample of Portland cement; but according to Vogt[h] the mineral was not pure. L. Bour-

[a] A. L. Day and E. S. Shepherd (Am. Jour. Sci., 4th ser., vol. 22, p. 265, 1906) find that a calcium silicate of this formula can not be deposited from lime-silica fusions. The other bases in it are essential to its formation. Its composition can not be regarded as certainly established.

[b] Mineralbildung in Schmelzmassen, pp. 96–176, 1892. See also G. Bodländer, Neues Jahrb., 1893, pt. 1, p. 15; and F. Fouqué, Bull. Soc. min., vol. 23, p. 10, 1900. Also a more recent discussion by Vogt, Die Silikatschmelzlösungen, pt. 1, p. 49, 1903. F. Zambonini (Zeitschr. Kryst. Min., vol. 41, p. 226, 1906) has advanced strong arguments against Vogt's hypothesis.

[c] See L. Bourgeois, Reproduction artificielle des minéraux, p. 123. J. H. L. Vogt, Mineralbildung in Schmelzmassen, 1892. F. Fouqué, Bull. Soc. min., vol. 9, p. 287, 1886. P. Heberdey, Zeitschr. Kryst. Min., vol. 26, p. 19, 1896. J. S. Diller, Am. Jour. Sci., 3d ser., vol. 37, p. 220, 1889.

[d] Min. pet. Mitth., vol. 18, p. 191, 1898.

[e] Bull. Soc. min., vol. 2, p. 105, 1879.

[f] Idem, vol. 23, p. 10, 1900.

[g] Neues Jahrb., 1892, pt. 1, p. 53.

[h] Idem, 1892, pt. 2, p. 73.

geois[a] prepared melilite by direct fusion of silica, lime, alumina, and certain other oxides commingled in proper proportions, but could not obtain the calcium alumosilicate alone. The presence of iron, magnesia, or manganese was essential to a successful synthesis. Soda also is probably essential; at all events, melilite forms more readily when soda is present. The existence of a purely calcic melilite remains to be established. C. Doelter and E. Hussak[b] found melilite among the fusion products of garnet and vesuvianite, and Doelter[c] reports it also as formed when tourmaline is fused with calcium chloride and sodium fluoride. The synthesis of gehlenite was effected by L. Bourgeois,[d] who simply fused the constituent oxides together in the proportions indicated by the formula of the species.

Melilite is a mineral found only in the younger eruptives; never in the plutonic rocks or crystalline schists. It is frequently associated with nephelite or leucite, and sometimes takes the place of feldspar. Perofskite is one of its most constant companions. Its origin is always pyrogenic.[e]

Alterations of melilite seem to have been little studied. A. Cathrein[f] has described pseudomorphs of pyroxene (fassaite) and grossularite after gehlenite. By heating gehlenite with a solution of potassium carbonate to 200°, J. Lemberg[g] obtained calcium carbonate and an amorphous product having the composition of a potassium mica.

THE GARNETS.

Grossularite.—Isometric. Composition, $Ca_3Al_2Si_3O_{12}$. Molecular weight, 451.7. Specific gravity, 3.5. Molecular volume, 129. Color, white, yellow, brown, and sometimes pale green or rose-red. The coloration is due to impurities.

Pyrope.—Isometric. Composition, $Mg_3Al_2Si_3O_{12}$. Molecular weight, 404.6. Specific gravity, 3.7. Molecular volume, 109.4. Color, deep red to nearly black.

Almandite.—Isometric. Composition, $Fe_3Al_2Si_3O_{12}$. Molecular weight, 499.1. Specific gravity, 3.9 to 4.2. Molecular volume, 118. Color, red to brown and black. Pyrope and almandite shade one into the other through varying mixtures of the iron and magnesium compounds.

---

[a] Ann. chim. phys., 5th ser., vol. 29, p. 450, 1883.

[b] Neues Jahrb., 1884, pt. 1, p. 159.

[c] Idem, 1897, pt. 1, p. 1.

[d] Ann. chim. phys., 5th ser., vol. 29, p. 448, 1883.

[e] For data upon melilite rocks see A. E. Torneböhm, Geol. Fören. Förhandl., vol. 6, p. 240, 1882. A. Stelzner, Neues Jahrb., Bell. Bd. 2, p. 369, 1883. F. D. Adams, Am. Jour. Sci., 3d ser., vol. 43, p. 269, 1892. C. H. Smyth, idem, vol. 46, p. 104, 1893. The last two references deal with American occurrences.

[f] Min. pet. Mitth., vol. 8, p. 400, 1887.

[g] Zeitschr. Deutsch. geol. Gesell., 1892, p. 237.

Spessartite.—Isometric. Composition, $Mn_3Al_2Si_3O_{12}$. Molecular weight, 496.4. Specific gravity, 4.2. Molecular volume, 118. Color, red to brown.

Andradite, melanite, or common garnet.—Isometric. Composition, $Ca_3Fe'''_2Si_3O_{12}$. Molecular weight, 509.3. Specific gravity, 3.85. Molecular volume, 158.2. Color, green, yellow, brown, or black.

Uvarovite.—Isometric. Composition, $Ca_3Cr_2Si_3O_{12}$. Molecular weight, 501.7. Specific gravity, 3.5. Molecular volume, 143. Color, emerald-green.

The foregoing six species, with their many isomorphous mixtures, form the important garnet group. With them may be included the rare mineral schorlomite, which contains titanium partly replacing silicon and ferric iron. Its formula is $Ca_3(Fe,Ti''')_2(SiTi^{iv})_3O_{12}$.[a] The sodium garnet lagoriolite, $Na_6Al_2Si_3O_{12}$, which was obtained by J. Morozewicz [b] from some of his artificial magmas, also belongs here. Its existence accounts for the small amounts of alkalies which appear in some analyses of grossularite, although they may be due in part to inclusions. Garnets are peculiarly prone to carry other species as inclosures within their crystals. Some garnets are hardly more than shells enveloping other species.[c]

Although garnet is undoubtedly a pyrogenic mineral, its synthesis is attended by considerable difficulties. When fused by itself, garnet breaks up into other compounds. C. Doelter and E. Hussak,[d] upon fusing garnets alone, obtained meionite, melilite, anorthite, lime olivine, a calcium nephelite (?), hematite, and spinel, the products varying with the composition of the original mineral. By fusing grossularite with sodium and magnesium fluorides, Doelter [e] obtained biotite, anorthite, meionite, olivine, and magnetite. L. Bourgeois,[f] from the fusion of a mixture equivalent to grossularite, obtained anorthite and monticellite; and J. H. L. Vogt [g] reports anorthite as formed under similar conditions. When magnesia, oxide of manganese, or iron oxide was added to Vogt's mixture, melilite was also produced. The syntheses of garnet reported by several early investigators [h] are of doubtful authenticity.

Bourgeois, however, in the research just cited, prepared spessartite by fusing together its constituent oxides in the proper proportions.

---

[a] R. Soltmann (Zeitschr. Kryst. Min., vol. 18, p. 628, 1891) has described a melanite garnet containing 11.01 per cent of TiO_2, which should probably be partly reduced to Ti_2O_3.

[b] Min. pet. Mitth., vol. 18, p. 147, 1898.

[c] For systematic papers on the garnet group see W. C. Brögger and H. Bäckström, Zeitschr. Kryst. Min., vol. 18, p. 209, 1891; and E. Weinschenk, idem, vol. 25, p. 365, 1896.

[d] Neues Jahrb., 1884, pt. 1, p. 158.

[e] Idem, 1897, pt. 1, p. 1.

[f] Ann. chim. phys., 5th ser., vol. 29, p. 458, 1883.

[g] Mineralbildung im Schmelzmassen, p. 187, 1892.

[h] See Fouqué and Lévy, *Synthèse des minéraux et des roches*, p. 122.

A. Gorgeu[a] also obtained spessartite when pipe clay was fused with an excess of manganese chloride. A similar fusion with calcium chloride gave, with other products, crystals which were possibly grossularite. Fouqué and Lévy[b] report melanite as formed when nephelite and pyroxene are fused together. L. Michel[c] produced melanite and sphene by heating a mixture of ilmenite, silica, and calcium sulphide to 1,200°. In this case the artificial melanite was verified by analysis. Apparently pyrogenic garnet can be produced only during a limited range of temperatures; and the success of an attempted synthesis depends upon securing the exact conditions. Pressure, also, may exert some influence upon the process.

Garnet, especially andradite, is an exceedingly common mineral, and is found as an accessory in a great variety of rocks. Grossularite is found principally in crystalline limestones, where it has been developed by contact metamorphism. Almandite and andradite are common in granitic rocks, gneisses, etc. Andradite also occurs as an accessory mineral in subsilicic eruptives, especially in leucite and nephelite rocks. It is also found in serpentines, in iron ore beds, and as a product of contact action, associated with wollastonite and pyroxene, in certain volcanic rocks. Pyrope is often found in peridotites and the serpentines derived from them. Spessartite occurs in granite, quartzite, and some schists. W. Cross[d] has reported it from lithophyses in rhyolite. Garnets are also abundant in many crystalline schists, such as garnet rock, garnet amphibolite, garnet hornfels, garnet-mica schist, etc. Eclogite is a rock in which garnet and a green pyroxene are the principal minerals.

Alterations of garnet are exceedingly common. A. Cathrein,[e] describing the rocks of a single region, reports pseudomorphs after garnet of scapolite, epidote, oligoclase, hornblende, saussurite, and chlorite. Chloritic pseudomorphs are perhaps the most frequent.[f] The pyrope found in peridotite rocks is often surrounded by a zone or shell of altered material, to which A. Schrauf[g] has given the name kelyphite. It is, however, not a substance of uniform composition. The kelyphite studied by A. von Lasaulx[h] was mainly a mixture of pyroxenes and amphiboles. J. Mrha[i] described a kelyphite consisting of bronzite, monoclinic pyroxene, picotite, and hornblende. The pyrope from the peridotite dikes of Elliott

[a] Ann. chim. phys., 6th ser., vol. 4, pp. 536, 553, 1885.
[b] Compt. Rend., vol. 87, p. 962, 1878.
[c] Idem, vol. 115, p. 830, 1892.
[d] Am. Jour. Sci., 3d ser., vol. 31, p. 432, 1886.
[e] Zeitschr. Kryst. Min., vol. 10, p. 433, 1885.
[f] See for example J. Lemberg, Zeitschr. Deutsch. geol. Gesell., vol. 27, p. 531, 1875; and S. L. Penfield and F. L. Sperry, Am. Jour. Sci., 3d ser., vol. 32, p. 307, 1886.
[g] Zeitschr. Kryst. Min., vol. 6, p. 358, 1882.
[h] Verhandl. Naturhist. Ver. preuss. Rheinland u. Westfalen, vol. 39, pt. 2, p. 114, 1882.
[i] Min. pet. Mitth., vol. 19, p. 111, 1899.

County, Kentucky, described by J. S. Diller,[a] was surrounded by a similar shell made up of biotite and magnetite, with a little picotite. Biotite is not an uncommon derivative of the magnesian garnets. Garnet itself appears occasionally as an alteration product of other minerals. P. Jereméef[b] has recorded pseudomorphs of grossularite after vesuvianite; and grossularite after gehlenite was observed by A. Cathrein.[c]

VESUVIANITE.

Tetragonal. Composition variable, and best represented by the general formula $Al_2Ca_7Si_6O_{24}R'_4$; in which R'_4 may be Ca_2, $(AlOH)_2$, $(AlO_2H_2)_4$, or H_4. Some replacements of magnesium and iron are usually present; a little fluorine may be substituted for hydroxyl, and in the variety wiluite there is a small amount of boric oxide.[d] Specific gravity, 3.35 to 3.45. Hardness, 6.5. Color, brown or green, sometimes yellow or pale blue. A massive variety of vesuvianite resembling jade has been called californite.

Vesuvianite has not yet been prepared synthetically. It is known chiefly as a product of contact metamorphism in limestones, associated with pyroxene, scapolite, garnet, wollastonite, and epidote. It is also found in some serpentines, chlorite schist, gneiss, etc. Pseudomorphs of grossularite after vesuvianite have been reported by P. Jereméef.[e] When vesuvianite is fused, it breaks up into meionite, melilite, anorthite, and possibly a lime olivine.[f]

THE SCAPOLITES.

Meionite.—Tetragonal. Composition, $Ca_4Al_6Si_6O_{25}$. Molecular weight, 893.4. Specific gravity, 2.72. Molecular volume, 328.4. Colorless or white. Hardness, 5.5 to 6.

Marialite.—Tetragonal. Composition, $Na_4Al_3Si_9O_{24}Cl$. Molecular weight, 848.4. Specific gravity, 2.57. Molecular volume, 330.1. Colorless or white. Hardness, 5.5 to 6.

These two species, with their isomorphous mixtures, form the scapolite group as interpreted by G. Tschermak.[g] Intermediate between them, and analogous to the plagioclase feldspars lying between

[a] Bull. U. S. Geol. Survey No. 38, 1887.

[b] Zeitschr. Kryst. Min., vol 31, p. 505, 1899.

[c] Min. pet. Mitth., vol. 8, p. 400, 1887.

[d] See F. W. Clarke and G. Steiger, Bull. U. S. Geol. Survey No. 262, 1905. For other interpretations of vesuvianite see P. Jannasch and P. Weingarten, Zeitschr. anorg. Chemie, vol. 8, p. 356, 1895; M. Weibull, Zeitschr. Kryst. Min., vol. 25, p. 1, 1895; A. Kenngott, Neues Jahrb., 1891, pt. 1, p. 200; H. Sjögren, Geol. Fören. Förhandl., vol. 17, p. 267, 1895.

[e] Zeitschr. Kryst. Min., vol. 31, p. 505, 1899.

[f] C. Doelter and E. Hussak, Neues Jahrb., 1884, pt. 1, p. 158.

[g] Min. pet. Mitth., vol. 7, p. 400, 1886; Monatsh. Chemie, vol. 4, p. 851, 1883. Compare F. W. Clarke's constitutional formulæ in Bull. U. S. Geol. Survey No. 125, 1895.

anorthite and albite, are the following scapolites, which have received independent names:

Wernerite	Me_3Ma_1 to Me_1Ma_2
Mizzonite or dipyre	Me_1Ma_2 to Me_1Ma_3

The reported syntheses of scapolite are not altogether conclusive. L. Bourgeois [a] attempted to prepare meionite by fusing together its constituent oxides, and obtained principally anorthite. By adding fragments of marble to a molten basaltic glass, however, he observed in one case the formation of crystals which were probably meionite. By fusing a leucitite with the fluorides of sodium and calcium, K. B. Schmutz [b] obtained an artificial rock containing scapolite; and a similar experiment with eclogite also yielded the mineral. The same procedure with epidote and fluorides gave C. Doelter [c] a product in which meionite was recognized. Doelter also reports the synthesis of meionite by fusion of the mixed oxides, lime, silica, and alumina; and by fusion of a silicate, $CaAl_2Si_2O_8$, with sodium chloride. His attempts to prepare marialite failed. The exact conditions which permit the formation of scapolites are yet to be determined.

The scapolites occur principally in the crystalline schists, gneisses, amphibolites, and metamorphosed limestones. They are commonly products of metamorphic contact action and appear to be, as their composition would indicate, derived from plagioclase feldspar. They have been found as secondary minerals in various eruptive rocks.[d] In Norway scapolite rocks are associated with masses of apatite, especially at Oedegaarden. In this instance J. W. Judd [e] has traced the development of the scapolite from plagioclase, and has ascribed the transformation partly to the action of sodium chloride solutions contained in cavities of the rock, and partly to powerful mechanical stresses. A. Lacroix,[f] however, regards the change as due to contact action between the rock and the apatite, although in other localities solutions of chlorides appear to be operative. Mechanical agencies are considered by Lacroix to be unimportant. At the Oedegaarden locality, which has been studied by several authorities, a granitic mixture of pyroxene and feldspar has been transformed into an aggregate of hornblende and scapolite. By fusion Fouqué and Lévy [g] transformed it back again into pyroxene and labradorite. A Canadian scapolite diorite has been described by F. D. Adams and

[a] Ann. chim. phys., 5th ser., vol. 29, pp. 446, 472, 1883.

[b] Neues Jahrb., 1897, pt. 2, pp. 133, 149.

[c] Idem, pt. 1, p. 1.

[d] See F. Zirkel, Lehrbuch der Petrographie, vol. 1, p. 382, 1893. W. Salomon, Min. pet. Mitth., vol. 15, p. 159, 1895, gives a good bibliography relative to dipyre.

[e] Mineralog. Mag., vol. 8, p. 186, 1889.

[f] Bull. Soc. min., vol. 14, p. 16, 1891. In vol. 12, p. 83, 1889, Lacroix has an elaborate monograph upon scapolite rocks.

[g] Bull. Soc. min., vol. 2, p. 112, 1879.

A. C. Lawson,[a] and H. Lenk[b] has studied an augite-scapolite rock from Mexico.

The scapolites are exceedingly alterable, and most so toward the sodium or marialite end of the series. Many of the alteration products have been regarded as distinct species and have received independent names. Pseudomorphs of mica, often in the form of "pinite," after scapolite are very common. Alterations into epidote, steatite, kaolin, and free silica are also recorded. A. Cathrein[c] has reported pseudomorphs of scapolite after garnet.

IOLITE.

Iolite or cordierite.—Orthorhombic. $H_2(Mg,Fe)_4Al_8Si_{10}O_{37}$.[d] Molecular weight and volume variable on account of variations between Mg and Fe. Specific gravity, 2.60 to 2.66. Color, blue, often smoky or grayish. Hardness, 7 to 7.5.

A possible synthesis of iolite was reported by L. Bourgeois,[e] who fused silica, magnesia, and alumina together in proper proportions. J. Morozewicz[f] also obtained it in his experiments upon artificial magmas, supersaturated with alumina, of the general formula $RO.mAl_2O_3.nSiO_2$. When magnesia and iron were present and n was greater than 6, iolite was formed. In short, he produced an artificial cordierite-vitrophyrite, resembling the African rock described by G. A. F. Molengraaf.[g] These syntheses, however, were made with anhydrous materials; and the product could not have been identical with the iolite of natural occurrences. All the trustworthy analyses of the mineral show that water is one of its essential constituents.

Iolite is found in nature in a great variety of rocks, including both metamorphic rocks and eruptives. It has been reported in granite, quartz porphyry, basalt, quartz trachyte, biotite dacite, and andesite; and seems to be a primary separation from the magmas.[h] In order of deposition it follows biotite, but precedes the feldspars. In cordierite gneiss and cordierite hornfels iolite is a characteristic constituent. The gneiss from Connecticut described by E. O. Hovey[i] consisted mainly of biotite, quartz, and iolite, with some plagioclase.

---

[a] Canadian Rec. Sci., vol. 3, p. 186, 1888.

[b] Neues Jahrb., 1899, pt. 1, ref. 73.

[c] Zeitschr. Kryst. Min., vol. 9, p. 378, 1884; vol. 10, p. 434, 1885.

[d] Formula based upon O. C. Farrington's analysis, Am. Jour. Sci., 3d ser., vol. 43, p. 13, 1892. M. Weibull (Geol. Fören. Förhandl., vol. 22, p. 33, 1900) regards the mineral as anhydrous, and writes the formula $Mg_2Al_2(AlO)_2Si_5O_{16}$.

[e] Ann. chim. phys., 5th ser., vol. 29, p. 462, 1883.

[f] Min. pet. Mitth., vol. 18, pp. 68, 167, 1898. See *ante*, p. 276, under "Corundum."

[g] Neues Jahrb., 1894, pt. 1, p. 79.

[h] See H. Bücking, Ber. Senckenbergischen naturforsch. Gesell., 1900, Abhandl., p. 3; J. Szabó, Neues Jahrb., Beil. Bd. 1, p. 308, 1881; E. Hussak, Sitzungsb. Akad. Wien, vol. 87, pt. 1, p. 332, 1883; Neues Jahrb., 1885, pt. 2, p. 81; A. Harker, Geol. Mag., 1906, p. 176.

[i] Am. Jour. Sci., 3d ser., vol. 36, p. 57, 1888.

Iolite is also well known as a product of contact metamorphism. For example, Bücking[a] found it in sandstones which had been vitrified by contact with basalt; and Kikuchi[b] has described a Japanese locality where iolite occurs in slate at contact with granite.

Iolite alters with great ease, taking up water and alkalies. The product is usually an impure mica, and many pseudomorphs of this character have received distinctive names. Chlorophyllite, praseolite, aspasiolite, gigantolite, fahlunite, pinite, etc., are merely altered iolite.[c]

THE ZOISITE GROUP.

Zoisite.—Orthorhombic.[d] Composition, $HCa_2Al_3Si_3O_{13}$. Molecular weight, 455.9 Specific gravity, 3.25 to 3.37. Molecular volume, 138. Color, white, gray, greenish, yellowish, reddish. Hardness, 6 to 6.5.

Epidote.—Monoclinic. Composition like zoisite, but with varying replacements of Al by Fe. The variety with little or no iron has been called clinozoisite. Specific gravity, 3.25 to 3.5. Color commonly green, yellowish or brownish green, to black, sometimes red, yellow, or gray; rarely colorless. Hardness, 6 to 7.

Piedmontite.—Monoclinic. Composition like epidote, but with Mn replacing some Al and Fe. Specific gravity, 3.4. Color, reddish brown to black. Hardness, 6.5.

Allanite or orthite.—Monoclinic. Composition like epidote, but with cerium earths partly replacing alumina and iron. Specific gravity, 3.5 to 4.2. Color, brown to black. Hardness, 5.5 to 6.

The reported syntheses of zoisite and epidote are questionable, for the products seem to have contained no water. A. Brun[e] claimed to have produced zoisite by fusing 40 parts of silica with 37 of lime and 23 of alumina. C. Doelter,[f] upon fusing epidote powder with the fluorides of sodium and calcium, obtained indications of some recrystallization of the epidote, together with garnet, meionite, anorthite, olivine, and magnetite. Epidote fused alone gave anorthite and a lime augite. Satisfactory syntheses of the minerals forming this group are yet to be made.

Zoisite is essentially a mineral of the crystalline schists, such as amphibolite, glaucophane schist, eclogite, etc. It is also found in some granites and in beds of sulphide ores. A secondary zoisite, de-

[a] Loc. cit.

[b] Jour. Coll. Sci., Japan, vol. 3, p. 313, 1890. Kikuchi also describes an alteration of the iolite into pinite.

[c] For a summary of these alterations see A. Wichmann, Zeitschr. Deutsch. geol. Gesell., vol. 26, p. 675, 1874. For the mechanism of the change from iolite to chlorophyllite, see F. W. Clarke, Bull. U. S. Geol. Survey No. 125, p. 83, 1895.

[d] For optical variations in zoisite, see P. Termier, Bull. Soc. min., vol. 21, p. 148, 1898; vol. 23, p. 50, 1900. Termier regards the silicate $HCa_2R'''_3Si_3O_{13}$ as trimorphous.

[e] *Arch. sci. phys. nat.*, 3d ser., vol. 25, p. 239, 1891.

[f] *Neues Jahrb.*, 1897, pt. 1, p. 1.

rived from plagioclase and commonly containing both minerals commingled, is known as saussurite and is common in gabbros.[a] It is not at all uniform in composition.

Epidote, like zoisite, is a mineral of the crystalline schists, although C. R. Keyes [b] has cited evidence to show that it is a primary mineral in certain granites of Maryland. It is there intergrown with allanite and was also observed inclosed in primary sphene. A. Michel Lévy [c] also regards the epidote of certain Pyrenean ophites as primary. Epidote is common in gneisses, garnet rock, amphibolite, paragonite and glaucophane schists, and the phyllites, and as a contact mineral in limestones. It is also common as a secondary mineral, derived from feldspars, pyroxene, amphibole, biotite, scapolite, and garnet, and is frequently associated with chlorite. When lime-bearing ferromagnesian minerals chloritize their lime goes to the production of epidote. An epidote-quartz rock derived from diabase has been called epidosyte.[d]

Piedmontite is much less abundant than zoisite or epidote and is mainly confined to the crystalline schists. It also occurs with iron ores, and as a secondary mineral in eruptives. G. H. Williams [e] has reported piedmontite in a rhyolite from Pennsylvania and N. Yamasaki [f] has described a similar occurrence in Japan. Piedmontite is quite common in the crystalline schists of Japan,[g] forming a piedmontite schist, and also associated with rocks containing chlorite or glaucophane.

Allanite is widely diffused as a primary accessory in many igneous rocks. J. P. Iddings and W. Cross,[h] who have pointed out its importance, cite occurrences of allanite in gneiss, granite, quartz porphyry, diorite, andesite, dacite, rhyolite, etc. W. H. Hobbs,[i] studying the granite of Ilchester, Maryland, in which allanite and epidote are intergrown, has especially discussed the paragenesis of the two species. The same association of minerals has been reported by F. D. Adams,[j] A. Lacroix,[k] G. H. Williams,[l] and others. In the

[a] Also in the greenstones of the Lake Superior region. See G. H. Williams, Bull. U. S. Geol. Survey No. 62, 1890, where the process of saussuritization is discussed. Williams cites abundant references to the literature of the subject.

[b] Bull. Geol. Soc. America, vol. 4, p. 305, 1893.

[c] Bull. Soc. géol., 3d ser., vol. 6, p. 161.

[d] For a discussion of this alteration, with references to literature, see A. Schenck, Doct. Diss., Bonn, 1884. Williams, in Bull. U. S. Geol. Survey No. 62, 1890, also discusses the process of epidotization somewhat fully.

[e] Am. Jour. Sci., 3d ser., vol. 46, p. 50, 1893. This paper contains many references to literature.

[f] Jour. Coll. Sci., Japan, vol. 9, p. 117, 1897.

[g] See B. Koto, idem, vol. 1, p. 303, 1887.

[h] Am. Jour. Sci., 3d ser., vol. 30, p. 108, 1885.

[i] Idem, vol. 38, p. 223, 1889.

[j] Canadian Rec. Sci., vol. 4, p. 344, 1891.

[k] Bull. Soc. min., vol. 12, pp. 138, 157, 210, 1889.

[l] Bull. U. S. Geol. Survey No. 62, 1890.

granite of Pont Paul, France, allanite is sometimes enveloped by biotite.[a] Allanite is often much altered, yielding carbonates of the cerium group, together with earthy products of uncertain character.

TOPAZ.

Orthorhombic. Simplest empirical formula, $Al_2SiO_4F_2$, but with part of the fluorine commonly replaced by hydroxyl.[b] Molecular weight, 184.6. Specific gravity, 3.56. Molecular volume, 51.9. Color, white, yellow, greenish, bluish, and reddish. Hardness, 8. The true formula is probably three times that given above, with the molecular weight and volume correspondingly tripled.[c]

The synthesis of a product allied to topaz was early reported by A. Daubrée,[d] who heated alumina in a current of silicon fluoride. It contained, however, too little fluorine, and varied in other respects from topaz. H. Sainte-Claire Deville,[e] repeating the experiment, obtained no fluoriferous silicate. C. Friedel and E. Sarasin [f] claim to have prepared topaz by heating alumina, silica, water, and hydrofluosilicic acid together at 500°, but give no details nor analyses. A. Reich [g] subjected a mixture of silica and aluminum fluoride to a strong red heat, and afterwards ignited the mixture thus obtained in a current of silicon fluoride. By this process topaz was formed, which was identified both crystallographically and by analysis. This is the only satisfactory synthesis of topaz so far recorded.

Topaz commonly occurs in gneiss or granite, and especially in tin-bearing pegmatites. The rock from the tin mine at Mount Bischoff, Tasmania, has been described by A. von Groddeck [h] as a porphyritic topazfels. The Brazilian topazes are found in decomposed material, which, according to O. A. Derby,[i] was probably a mica schist derived from an antecedent augite or nepheline syenite. In Colorado and Utah topaz occurs in lithophyses of rhyolite.[j] Gaseous emanations containing fluorine probably play an important part in its development. Topaz alters easily, by hydration and by the action of percolating alkaline solutions, and is transformed into compact muscovite.[k] The reported alterations to steatite and serpentine are probably based upon erroneous diagnoses. By heating topaz with a solution

---

[a] A. Michel Lévy and A. Lacroix, Bull. Soc. min., vol. 11, p. 65, 1888.

[b] S. L. Penfield and J. C. Minor, Am. Jour. Sci., 3d ser., vol. 47, p. 387, 1894.

[c] See F. W. Clarke and J. S. Diller, Bull. U. S. Geol. Survey No. 27, 1886, and also Clarke, Bull. No. 125, 1895.

[d] Études synthétiques de géologie expérimentale, p. 57.

[e] Compt. Rend., vol. 52, p. 780, 1861.

[f] Bull. Soc. min., vol. 10, p. 169, 1887.

[g] Monatsh. Chemie, vol. 17, p. 149, 1896.

[h] Zeitschr. Deutsch. geol. Gesell., vol. 36, p. 642, 1884.

[i] Am. Jour. Sci., 4th ser., vol. 11, p. 25, 1901.

[j] See W. Cross, idem, 3d ser., vol. 31, p. 432, 1886.

[k] For a complete study of this alteration, see F. W. Clarke and J. S. Diller, Bull. U. S. Geol. Survey No. 27, 1886. See also A. Atterberg, Geol. Fören. Förhandl., vol. 2, p. 402, 1874–75.

of sodium silicate 174 hours at 200° to 210°, J. Lemberg[a] converted it into an alkaline alumo-silicate of presumably zeolitic character. At a white heat topaz loses fluorine and becomes transformed into sillimanite.[b]

THE ANDALUSITE GROUP.

Andalusite.—Orthorhombic. Simplest empirical formula, Al_2SiO_5; true formula probably three times as great. Corresponding molecular weight, 162.6. Specific gravity, 3.18. Molecular volume, 51.1. Color, white, reddish, violet, brown, olive-green. Hardness, 7.5.

Sillimanite or fibrolite.—Orthorhombic. Composition and lowest molecular weight the same as for andalusite. Specific gravity, 3.2. Molecular volume, 50.8. Color, grayish white, grayish brown, pale green, brown. Hardness, 6 to 7.

Kyanite or cyanite.—Triclinic. Composition, etc., as with andalusite and sillimanite. Specific gravity, 3.6. Molecular volume, 45.2. Color, commonly blue, sometimes white, gray, or green. Hardness, 7.

These three minerals are of peculiar interest because of their identity in chemical composition. They undoubtedly differ in chemical structure, and kyanite possibly differs from the other two in molecular weight, but upon the latter point the evidence is not conclusive. Andalusite and sillimanite are commonly regarded as basic orthosilicates, and kyanite, on account of its greater resistance to the action of acids, has been interpreted by P. Groth as a metasilicate, $(AlO)_2SiO_3$.[c] In an interesting investigation by W. Vernadsky[d] it is shown that both andalusite and kyanite are transformed into sillimanite by simply heating to a temperature between 1,320° and 1,380°. Sillimanite therefore is the most stable of the three species, at least under pyrogenic conditions. Vernadsky has identified it as an essential constituent of hard porcelain. He also obtained sillimanite by fusing silica and alumina together. More recently A. Reich,[e] by heating aluminum fluoride with silica to strong redness, obtained a mixture of sillimanite and corundum. The conditions under which sillimanite can form magmatically have also been determined by J. Morozewicz.[f] In the magmatic mixture $RO.mAl_2O_3.nSiO_2$, if magnesia and iron are absent, $m=1$, and n is greater than

[a] Zeitschr. Deutsch. geol. Gesell., vol. 40, pp. 651 et seq., 1888.

[b] W. Vernadsky, Bull. Soc. min., vol. 13, pp. 259–260, 1890.

[c] A different but not very plausible interpretation of these species has been offered by K. Zulkowski, Monatsh. Chemie., vol. 21, p. 1086, 1900.

[d] Bull. Soc. min., vol. 13, p. 256, 1890; Compt. Rend., vol. 110, p. 1377, 1890. For earlier syntheses of these minerals, by Daubrée, Deville and Caron, Frémy and Feil, Meunier, and Hautefeuille and Margottet, see L. Bourgeois, Reproduction artificielle des minéraux, pp. 119, 120. The processes, except in the last instance, involved the use of aluminum fluoride, silicon fluoride, or silicon chloride, and were therefore indirect.

[e] Monatsh. Chemie, vol. 17, p. 149, 1896.

[f] Min. pet. Mitth., vol. 18, p. 72, 1898.

6, sillimanite is developed. K. Dalmer[a] has reported the alteration of a chlorite-mica phyllite into a mixture of andalusite and biotite.

Andalusite is a mineral of the metamorphic schists, and is especially common in the contact zones of clay slate near dikes of granite or diorite. It is also found in Archean gneiss and mica schist, and sometimes as an accessory in granite.

Sillimanite is common in the crystalline schists, particularly in feldspathic gneiss, and in cordierite gneiss. It is often found intergrown with quartz.

Kyanite also occurs in crystalline schists, such as gneiss, mica schist, paragonite schist, and eclogite. It is often embedded in quartz, and has been reported in limestone.[b]

Andalusite alters to muscovite,[c] and sometimes also to chlorite and kaolin.[d] J. Lemberg,[e] by heating andalusite or kyanite with alkaline silicates or carbonates under pressure, converted them into zeolitic substances. C. Doelter,[f] upon heating andalusite with potassium carbonate and fluoride during several weeks at 250°, observed the formation of scales of mica.

It has already been stated that the empirical formulæ for topaz and andalusite should probably be tripled, a suggestion which is based partly upon their alterability into muscovite. On this basis the three species compare as follows:

Andalusite	$Al_3(SiO_4)_3(AlO)_3$.
Topaz	$Al_3(SiO_4)_3(AlF_2)_3$.
Muscovite	$Al_3(SiO_4)_3KH_2$.

STAUROLITE.

Orthorhombic. Composition, $HFeAl_5Si_2O_{13}$,[g] with a little magnesia or sometimes manganese oxide replacing a part of the iron. Molecular weight, 457.2. Specific gravity, 3.7. Molecular volume, 123. Color, brown to black. Hardness, 7 to 7.5.

No authentic synthesis of staurolite has yet been recorded. The substance obtained by H. Sainte-Claire Deville and H. Caron,[h] by the action of silicon fluoride upon a heated mixture of alumina and quartz, and called staurolite by them, had nearly the composition of sillimanite.[i] P. Hautefeuille and J. Margottet,[j] in their memoir

[a] Neues Jahrb., 1897, pt. 2, p. 156.
[b] J. Kovař, Zeitschr. Kryst. Min., vol. 34, p. 704, 1901.
[c] A. Gramann, Neues Jahrb., 1901, pt. 2, p. 193.
[d] P. E. Haefele, Zeitschr. Kryst. Min., vol. 23, p. 551, 1894.
[e] Zeitschr. Deutsch. geol. Gesell., vol. 40, p. 651, 1888.
[f] Allgem. chem. Mineralogie, p. 207.
[g] Established by S. L. Penfield and J. H. Pratt, Am. Jour. Sci., 3d ser., vol. 47, p. 81, 1894.
[h] Compt. Rend., vol. 46, p. 764, 1858.
[i] H. Sainte-Claire Deville, idem, vol. 52, p. 780, 1861.
[j] Idem, vol. 96, p. 1052, 1883.

upon the synthesis of certain phosphates, also mention the production of a mineral resembling staurolite, but give us no further details.

Staurolite is a mineral of the metamorphic schists, especially of muscovite or paragonite schist, and some gneisses or slates. It is often associated with kyanite. Staurolite alters into muscovite.[a] The reported alteration into steatite is very questionable.

LAWSONITE.

Orthorhombic. Composition, $H_4CaAl_2Si_2O_{10}$. Molecular weight, 315.1. Specific gravity, 3.09. Molecular volume, 102. Color, pale blue to grayish blue. Hardness, 8.25.

Lawsonite was discovered by F. L. Ransome[b] in 1895, in a glaucophane-bearing schist from Tiburon Peninsula, California. It has since been found by S. Franchi and A. Stella[c] in the metamorphic schists of the Alps; by C. Viola[d] in the saussuritized gabbros of southern Italy; and by A. Lacroix[e] in similar rocks and glaucophane schists from Corsica and New Caledonia. J. P. Smith[f] has recently described lawsonite rocks from several localities in California, especially a lawsonite-glaucophane schist and a lawsonite-glaucophane gneiss. The latter rock carried about 25 per cent of lawsonite. The mineral is evidently of widespread occurrence. Its formula suggests a derivation from anorthite, by assumption of two molecules of water. Upon fusion, lawsonite would undoubtedly yield anorthite.

According to F. Cornu,[g] the compound $H_4CaAl_2Si_2O_9$ is dimorphous. Lawsonite is one modification; the other, isometric, he has named hibschite. It was found enveloping garnet as an inclusion in the phonolite of Aussig, Bohemia.

DUMORTIERITE.

Orthorhombic. Composition, $Al_8HBSi_3O_{20}$.[h] Molecular weight, 634. Specific gravity, 3.3. Molecular volume, 192. Color, blue, bluish green, lavender, or black. Hardness, 7.

---

[a] See analysis in Bull. U. S. Geol. Survey No. 220, p. 54, 1903.

[b] Bull. Dept. Geology Univ. California, vol. 1, p. 301, 1895. See also F. L. Ransome and C. Palache, Zeitschr. Kryst. Min., vol. 25, 1896, p. 531; and W. T. Schaller and W. F. Hillebrand, Bull. U. S. Geol. Survey No. 262, p. 58, 1905.

[c] Cited by P. Termier, Bull. Soc. min., vol. 20, p. 5, 1897. See also Termier, idem, vol. 27, p. 265, 1904.

[d] Zeitschr. Kryst. Min., vol. 28, p. 553, 1897.

[e] Bull. Soc. min., vol. 20, p. 309, 1897.

[f] Proc. Am. Phil. Soc., vol. 45, p. 183, 1907. See also A. S. Eakle, Bull. Dept. Geology Univ. California, vol. 5, p. 82, 1907.

[g] Min. pet. Mitth., vol. 25, p. 249, 1906.

[h] As determined by W. T. Schaller, Bull. U. S. Geol. Survey No. 262, pp. 91–120, 1905. See also W. E. Ford, Am. Jour. Sci., 4th ser., vol. 4, p. 426, 1902. Ford's formula differs slightly from Schaller's.

Dumortierite was originally discovered in a pegmatite gneiss near Lyons, in France. It has since been found in Germany, Austria, Norway, Argentina, and at several localities in the United States.[a] It has been observed in pegmatite, in cordierite gneiss,[b] in granite, and in certain quartz rocks associated with kyanite (Arizona), sillimanite (California), and andalusite (Washington). Muscovite is also one of its companions, and Schaller has observed its alteration into muscovite. It is an inconspicuous mineral, except for its usual bright-blue color, and is probably not at all rare. Its close relationship to andalusite, sillimanite, and kyanite is obvious. According to W. Vernadsky,[c] dumortierite, at a white heat, is converted into sillimanite. What other product is formed at the same time is not stated.[d]

TOURMALINE.

Rhombohedral. Composition, a complex borosilicate of aluminum and other bases. Color, white, yellow, brown, green, red, blue, and black. Specific gravity, 2.98 to 3.20. Hardness, 7 to 7.5.

Tourmaline really represents a group of isomorphous species, whose chemical relations are not yet completely understood. There are, however, three distinct types, as follows:

Alkali tourmaline: Contains lithium or sodium, sometimes potassium in less amount. Found in pegmatites, with muscovite and lepidolite.

Magnesium tourmaline: Chief base, after aluminum, magnesium. Often found in limestone or dolomite, with phlogopite as the accompanying mica.

Iron tourmaline: The common black variety, which alone is significant as a rock-making mineral. Contains iron in place of magnesium. Associated commonly with muscovite or biotite.

Between these distinct types there are various intermediate mixtures, and also rare examples in which a little chromium appears, partly replacing aluminum.

Over the chemical formula of tourmaline there has been much discussion, and no set of expressions can be assumed as final.[e] The following formulæ seem to be best sustained by evidence:[f]

---

[a] See Schaller's memoir, cited above, for a full summary of the known localities and a bibliography of the species.

[b] See A. Lacroix, Bull. Soc. min., vol. 12, p. 211, 1889.

[c] Bull. Soc. min., vol. 13, p. 256, 1890.

[d] G. I. Finlay (Jour. Geol., vol. 15, p. 479, 1907) reports dumortierite and corundum as original pyrogenic constituents of a pegmatite dike near Canyon, Colorado.

[e] See C. Rammelsberg, Neues Jahrb., 1890, pt. 2, p. 149. A. Kenngott, idem, 1892, pt. 2, p. 44. G. Tschermak, Min. pet. Mitth., vol. 19, p. 155, 1899; Zeitschr. Kryst. Min., vol. 35, p. 206, 1899. V. Goldschmidt, Zeitschr. Kryst. Min., vol. 17, pp. 52, 61, 1890. R. Scharizer, idem, vol. 15, p. 337, 1889. P. Jannasch and G. Calb, Ber. Deutsch. chem. Gesell., vol. 22, p. 216, 1889. H. Rheineck, Zeitschr. Kryst. Min., vol. 17, p. 604, 1890; *vol. 22, p. 52*, 1894. E. A. Wülfing, Min. pet. Mitth., vol. 10, p. 161, 1888.

[f] *Bull. U. S. Geol.* Survey No. 167, p. 26, 1900; Am. Jour. Sci., 4th ser., vol. 8, p. 111, *1899. Also in* Bull. U. S. Geol. Survey No. 125, 1895.

(1) $Al_8R'_5Si_6B_3O_{31}$.
(2) $Al_7R'_8Si_6B_3O_{31}$.
(3) $Al_5R'_{14}Si_6B_3O_{31}$.

In No. 3 the R′ is largely replaced by R″, which may be Fe or Mg. Hydrogen is important among the components of R′. Fluorine is also commonly present in small amounts. The general formula $Al_3R'_9(BOH)_2Si_4O_{19}$, proposed by S. L. Penfield and H. W. Foote,[a] is preferred by some authorities.

Tourmaline has not as yet been produced synthetically. The rock-forming iron-bearing variety is commonly found in the older and more highly siliceous igneous and granular rocks, such as granite, syenite, and diorite. It is also abundant in mica schists, clay slates, and other similar matrices. It forms in some cases at the contact between schists and granite, and may be abundant enough to characterize an occurrence as a tourmaline hornstone. In igneous rocks it seems to have been produced by fumarole action, and not as a direct separation from the magma. H. B. Patton[b] regards the tourmaline of certain schists in Colorado as having been formed at the expense of the biotite contained in the pegmatites adjoining the contact zone.

Tourmaline alters to mica, chlorite, and cookeite. Upon fusion, according to C. Doelter,[c] tourmaline yields olivine and spinel.

BERYL.

Hexagonal. Normal composition, $Al_2Gl_3Si_6O_{18}$. Molecular weight, 539.9. Specific gravity, 2.7. Molecular volume, 200. Colorless, white, more commonly green, sometimes yellow, blue, or rose. Hardness, 7.5 to 8.

Although normal beryl has the composition given above, the mineral generally varies from it. S. L. Penfield[d] has shown that many beryls contain alkalies, replacing glucina, and also some combined water, up to nearly 3 per cent. A beryl from Hebron, Maine, contained 3.60 per cent of Cs_2O. A beryl analyzed by J. S. De Benneville[e] carried 2.76 per cent of K_2O; and F. C. Robinson,[f] in another example, found 2.76 per cent of P_2O_5.

J. J. Ebelmen[g] succeeded in recrystallizing beryl by fusion with boric oxide. P. Hautefeuille and A. Perrey[h] obtained it in crystals by fusing a mixture of alumina, glucina, and silica with the same flux. H. Traube[i] precipitated a solution containing aluminum sul-

[a] Am. Jour. Sci., 4th ser., vol. 7, p. 97, 1899; vol. 10, p. 19, 1900.
[b] Bull. Geol. Soc. America, vol. 10, p. 21, 1898.
[c] Neues Jahrb., 1897, pt. 1, p. 1.
[d] Am. Jour. Sci., 3d ser., vol. 28, p. 25, 1884; vol. 36, p. 317, 1888.
[e] Jour. Am. Chem. Soc., vol. 16, p. 65, 1894.
[f] Jour. Anal. and Appl. Chem., vol. 6, p. 510, 1892.
[g] Ann. chim. phys., 3d ser., vol. 22, p. 237, 1848.
[h] Compt. Rend., vol. 106, p. 1800, 1888.
[i] Neues Jahrb., 1894, pt. 1, p. 275.

To these may be added ptilolite, mordenite, brewsterite, epistilbite, phillipsite, gismondite, laubanite, gmelinite, levynite, faujasite, edingtonite, mesolite, erionite, wellsite, and perhaps other species. As a rule, in the lime-bearing zeolites, a part of the lime may be replaced by other bases, generally by soda. Potassium, however, is found in notable quantities in phillipsite, harmotome, edingtonite, and wellsite; and strontium in brewsterite and wellsite. The formulæ given above are general and empirical, nothing more; but they suggest some paragenetic relations. Stilbite and heulandite seem, for example, to be derivatives of an unknown calcium-albite; and in general the zeolites appear to have been formed from feldspars or feldspathoids. Anorthite and nephelite are common parents of zeolitic minerals. Pectolite, okenite, gyrolite, and apophyllite[a] are other secondary minerals whose mode of occurrence is like that of the true zeolites; and possibly the species prehnite and datolite should on genetic grounds be grouped with them. Mineralogically these minerals are classed elsewhere; it is only as regards their mode of formation that they are mentioned now.

Many syntheses of zeolites and zeolitic compounds are recorded, and several species have been recrystallized from solution in superheated waters. The syntheses were necessarily effected by hydrochemical reactions, either operating upon such minerals as anorthite or nephelite, or by double decomposition between aqueous solutions. H. Sainte-Claire Deville,[b] for example, produced phillipsite, levynite, and gmelinite by heating solutions of potassium silicate with sodium or potassium aluminate to 170°. C. Doelter[c] prepared apophyllite, okenite, chabazite, heulandite, stilbite, laumontite, thomsonite, natrolite, and scolecite by various processes; and J. Lemberg[d] has shown that zeolites can be generated from one another by the action at moderately high temperatures of suitable reagents, such as the alkaline carbonates and silicates. The syntheses of analcite by De Schulten and Friedel and Sarasin have already been described.[e] At the hot springs of Plombières A. Daubrée[f] found zeolites which had been produced by the action of the percolating waters upon the cement and brick work of the old Roman baths. Chabazite, phillipsite, apophyllite, and gismondite were identified, and similar developments were afterwards discovered at other hot springs in France and Algeria.[g]

[a] On apophyllite as a rock-forming mineral, see F. Cornu, Centralbl. Min. Geol. Pal., 1907, p. 239.

[b] Compt. Rend., vol. 54, p. 324, 1862.

[c] Neues Jahrb., 1890, pt. 1, p. 118.

[d] Zeitschr. Deutsch. geol. Gesell., vol. 28, p. 519, 1876.

[e] See *ante*, p. 305.

[f] Études synthétiques de géologie expérimentale, p. 179.

[g] Idem, p. 199.

High temperatures, however, are not essential to the formation of zeolites. Phillipsite has been found abundantly in volcanic mud dredged up from the bottom of the Pacific Ocean;[a] and A. Lacroix[b] discovered several of the species under conditions which showed a recent origin from cold percolating waters.

THE CARBONATES.

Calcite.—Rhombohedral. Composition, $CaCO_3$. Molecular weight, 100.1. Specific gravity, 2.72. Molecular volume, 36.8. Hardness, 3. Normally colorless, but often variously colored by impurities.

Aragonite.—Orthorhombic. Composition, $CaCO_3$, like calcite. Specific gravity, 2.94. Molecular volume, 34. Hardness, 3.5 to 4. Color, white, but often tinted by impurities.

Dolomite.—Rhombohedral. Composition, $CaMgC_2O_6$. Molecular weight, 184.5. Specific gravity, 2.83. Molecular volume, 65.2. Hardness, 3.5 to 4. Normally colorless, but often tinted pink or brown.

Magnesite.—Rhombohedral. Composition, $MgCO_3$. Molecular weight, 84.4. Specific gravity, 3.0. Molecular volume, 28.1. Hardness, 3.5 to 4.5. Color, white to brown.

Siderite.—Rhombohedral. Composition, $FeCO_3$. Molecular weight, 115.9. Specific gravity, 3.88. Molecular volume, 29.9. Hardness, 3.5 to 4. Color, gray to brown, sometimes white. Breunnerite and mesitite are carbonates intermediate between siderite and magnesite in composition.

All these carbonates occur in igneous rocks as secondary or alteration products. Calcite is sometimes apparently of primary origin, but not certainly so. When heated under ordinary conditions, calcite dissociates into $CaO+CO_2$; but under great pressures it may be fused without decomposition. It is not impossible, therefore, that it may have formed in some cases during the solidification of a magma at great depth.

Calcite alone, as a rock, is represented by marble, limestone, chalk, etc., and is therefore a most important mineral. Dolomite also forms extensive rock masses. Both species will be more fully considered later in the study of sedimentary rocks.

---

[a] Rept. Challenger Exped., Narrative, vol. 1, pt. 2, pp. 774, 815, 1885.

[b] Compt. Rend., vol. 123, p. 761, 1896. The localities described are in the Pyrenees. Plagioclase and scapolite were the parent minerals.

CHAPTER XI.

IGNEOUS ROCKS.

PRELIMINARY CONSIDERATIONS.

When a magma solidifies to form a rock, it may become either that indeterminate substance known as glass or a mixture of definite mineral species. Between these two stages of development any intermediate phase may be produced, from a glass containing a few individualized crystals or microlites to a mass of crystalline matter with some vitreous remainder. The character of the product will depend upon a variety of conditions, such as the composition of the molten material, the rate of cooling, and the circumstances under which it cools. If solidification takes place at the surface of the earth, as in an ordinary volcanic outflow, one set of consequences will follow; if it is effected under pressure—that is, at great depths—the gaseous contents of the magma, being unable to escape, will play a part in the process, and determine the formation of compounds which could not otherwise be generated. In either case a relatively small number of these will form in preponderating quantities. If we consider the igneous rocks statistically, we shall find that in the average they contain the following minerals:

Feldspars	59.5
Hornblende and pyroxene	16.8
Quartz	12.0
Biotite	3.8
Titanium minerals	1.5
Apatite	.6
	94.2

The less abundant rock-forming minerals will make up the remaining 5.8 per cent.[a] The computation is by no means exact, but it serves to illustrate the relative importance of the several groups or species. Feldspars predominate, the ferromagnesian minerals come next in abundance, then quartz, and after that all other species as minor accessories. This statement, it must be borne in mind, deals

[a] A somewhat different estimate is given by H. S. Washington in Prof. Paper U. S. Geol. Survey No. 14, p. 155, 1903. Its general purport is, however, much the same as mine.

with averages only. Individual rocks may contain some of the less frequent minerals as principal constituents, such as olivine in the peridotites, nepheline or leucite in certain syenites or basalts, and so on. The moment we begin to study rocks separately we shall see that they vary widely from the mean.

Being mixtures, the igneous rocks represent an almost infinite range of composition. The minerals which are capable of simultaneous generation from a magma may be commingled in various proportions. Rocks, therefore, are not sharply classifiable upon the basis of their composition, for they shade into one another through all possible gradations, and are separable by no precise dividing lines. A mineral is a distinct stoichiometric compound; a rock, except when it happens to consist of one mineral alone, is not. Mineralogically a rock may be quartz, or olivine, or hornblende, or pyroxene, with very little impurity; but these are the exceptional cases. Mixtures of two or more components, in variable proportions, form the rule.

Certain mixtures, however, are much more common than others, and are represented by widely diffused and abundant rock types. Granite, for example, is a mixture of quartz and feldspar, with subordinate ferromagnesian minerals, and samples from different parts of the world are surprisingly similar. Absolute identity is, of course, out of the question; but the approximation to it is close enough to mark out what we may regard as a good rock species. Upon uniformities of this kind the prevalent classifications of the igneous rocks are based. The more frequent mixtures form the familiar types, and under them there appear an indefinite number of varieties, representing minor differences of composition, intermediate forms, modes of occurrence, textures, genetic relationships, or even geologic age. With some of these criteria we have no present concern; only the chemical aspects of rock classification fall within the scope of this work. Other considerations have much weight, of course, but it is not the province of the chemist to discuss them.

CLASSIFICATION.

From a chemical point of view the igneous rocks may be classified in three different ways. First, on the basis of their ultimate composition. Second, by their proximate units, the minerals which they contain. The latter procedure is at present most in vogue, but the first method has strong advocates and may possibly prevail. In the third place we can start from the conception of a magma as a solution and regard the eutectic mixtures as the definite types with which the igneous rocks shall be compared. Let us consider the three propositions separately.

At first sight the mineralogical classification, a classification by the compounds which a rock actually contains, would seem to be the simplest and most reasonable. In practice, however, it is beset with difficulties. A perfectly fresh, unaltered, entirely crystalline rock is easy to describe on this basis; but all rocks do not fulfill these conditions. In some rocks the mineralogical development is obscure, so that essential constituents can not be clearly defined. In others the development is incomplete, a certain amount of undifferentiated glass remaining to complicate the problem. We can infer in such cases what minerals should form if the devitrifying process were ended; but our inferences may not be conclusive. In some instances supposed glass has proved to be analcite, and misapprehensions of that order are not easily avoided. This objection, of course, carries little weight, for any classification is liable to be influenced by errors of diagnosis. Only, other things being equal, that classification is best in which the liabilities to error are fewest. The fundamental difficulty of all is inherent in the nature of our problem; for in dealing with mixtures it is not easy to establish dividing lines, and to decide on which side of an imaginary boundary a given rock should be placed. This difficulty, which chiefly affects our judgment in dealing with intermediate forms, exists in all rock classifications. It can only be overcome by conventional devices, which must be more or less arbitrary.

Some of the difficulties which obstruct a mineralogical classification are avoided by the purely chemical system. The latter rests upon supposedly good analyses of rocks, and the molecular ratios deduced from the analytical data are the ultimate criteria. Good analyses are easily obtained; their discussion involves no questionable hypotheses, and their classification is comparatively easy.[a] But is a classification of analyses a classification of rocks? That question needs to be considered very carefully.

In the first place a rock mass may be a perfectly definite petrographic unit and yet not be homogeneous. In fact the presence of separately distinguishable minerals in it is evidence of heterogeneity. Suppose, now, that two analysts, equally competent, receive samples of a given rock taken from the same quarry by two different collectors. In one sample the phenocrysts of a certain mineral are a little more numerous or a little larger than in the other. The two analyses will therefore diverge, and the same rock, because of their dissimilarities, may be classified under two distinct headings. Evidently, in such a case, something more than analysis is needed in order to define the nature of the substance under examination. Chemically at least the nature of the substance is the essential thing

[a] *Such a classification* has been proposed by H. Warth, Geol. Mag., 1906, p. 131. It *is, however, not quite* satisfactory, nor sufficiently elaborated.

to be determined; and therefore both chemical and mineralogical evidence must be taken into account together. According to its nature the substance is to be classified.

The interdependence of the two schemes of classification can be brought out in still another way. It is a commonplace of chemistry that two or even many substances may have absolutely the same percentage composition and yet be very different in their molecular structure and physical properties. Methyl oxide, for instance, is a gas; ethyl alcohol is a liquid; and yet both compounds are accurately represented by the same empirical formula, C_2H_6O. Nor is this an exceptional case, for organic chemistry takes cognizance of similar examples by the thousand. The differences are ascribed to different arrangements of the atoms within the molecule, and the substances which exhibit this empirical identity are said to be isomeric.

Similar instances, although not so sharply defined, and by no means so clearly interpreted, are found in mineralogy. The pyroxenes and amphiboles, for example, have in general the same molecular ratios, while enstatite and anthophyllite are alike in ultimate composition. Amphiboles, by fusion alone, are transformable into pyroxenes, and the reverse change takes place when pyroxene is altered into uralite. Two rocks, then, alike in composition as shown by analysis, and magmatically identical, may be quite different mineralogically, the one containing amphibole and the other pyroxene. Analytical data will lead us to class them together; mineralogical considerations place them apart. This is a simple case, but as rocks become more complex, the chances of pseudoidentity increase, and mixtures that are very unlike may, as interpreted by analysis alone, appear to be the same. Even when the analyses show empirical differences, the molecular ratios may become identical, and therefore deceptive. Mere analysis, then, does not furnish a complete basis for rock classification. It takes us one step toward the goal, but other steps must follow. The chemical constitution of a rock, as indicated by its proximate ingredients, is fully as important a factor in its classification as its ultimate composition.

The classification of igneous rocks on the basis of eutectic mixtures, advocated by G. F. Becker,[a] is of a different order from either of the other systems. Rocks, considered in the mass, are variable comminglings of minerals; but the eutectics, being definite mixtures, may be taken as the standard types. From this point of view, the groundmass of a rock becomes its most characteristic feature, and the phenocrysts are only the accidental excesses of one constituent or another over the eutectic ratio. The importance of this principle has been already

[a] Twenty-first Ann. Rept. U. S. Geol. Survey, pt. 3, p. 519, 1901. Science, vol. 20, p. 550, 1904. *Publications of the* Carnegie Institution of Washington, No. 31.

discussed in a previous chapter,[a] and its application to petrography is foreshadowed in the writings of Guthrie, Lagorio, Teall, Lane, and Vogt.[b] That magmas and the products of their solidification must be studied on physicochemical lines is generally admitted, and a eutectic classification would seem to follow naturally from that kind of investigation. At present, however, such a classification is only a matter of theory; and its effectiveness can not be tested until a reasonable number of eutectics have been identified and described. Teall, Lane, and Vogt all agree in thinking that micropegmatite is a eutectic mixture of quartz and feldspar, and Vogt has gone still further in the development of probabilities. In a recent memoir [c] he has sought to show that a large number of eruptive rocks fell into two classes, which he terms "anchi-eutektische" and "anchi-monomineralische;" that is, nearly eutectic and nearly composed of one mineral alone. Under the latter heading fall those anorthosites, pyroxenites, peridotites, etc., which happen to consist of single minerals to the extent of 90 per cent or more. The nearly eutectics he illustrates chiefly by the micropegmatites. The suggested eutectics, however, are not yet fully established; and the proposed classification can not be attempted until much more experimental work has been done. Its difficulties will be chiefly manifest in dealing with multicomponent systems; and to anything beyond a three-component group of minerals its application may be impracticable. Its units, it must be observed, are those of the mineralogical system, with which it is much more nearly allied than with the classification by radicles or oxides. The classification by analyses deals with the latter; the mineralogical method with the compounds which actually appear to the eye. To a considerable extent the three systems lead to the same grouping of rocks, and it remains to be seen whether the study of the eutectics may not bring both physical and chemical data still more into harmony. In a complete classification the systems should converge, each one to the reinforcement of the others. The prevalence of a few clearly marked rock types may perhaps be explained when the eutectic mixtures are known.

---

[a] See *ante*, Chapter IX, pp. 247–250.

[b] F. Guthrie, Phil. Mag., 4th ser., vol. 49, p. 20, 1875. A. Lagorio, Min. pet. Mitth., vol. 8, p. 421, 1887. Teall, British Petrography, pp. 392–402, 1888. A. C. Lane, Jour. Geol., vol. 12, p. 83, 1904. J. H. L. Vogt, Die Silikatschmelzlösungen, pt. 1, pp. 101–107, 1903; pt. 2, pp. 113–128, 1904; and Min. pet. Mitth., vol. 25, p. 361, 1906. Later discussions of the subject are by H. E. Johannson, Geol. Fören. Förhandl, vol. 27, p. 119, 1905; S. Zemčuzny and F. Loewinson-Lessing, Geol. Centralbl., vol. 8, p. 393, 1906; and A. Bygdén, Bull. Geol. Inst. Upsala, vol. 7, p. 1, 1906.

[c] Norsk Geol. Tidsskr., vol. 1, No. 2, 1905. Vogt's nomenclature suggests that the igneous rocks might be briefly described by the adjectives unicomponent, bicomponent, tricomponent, and possibly multicomponent, with reference, obviously, to their principal constituents and regarding small amounts of accessory minerals as impurities. In such a classification it would be necessary to regard isomorphous mixtures, like the plagioclases, as single components.

Now, recognizing the fact that all classifications of the igneous rocks are at present more or less arbitrary, let us consider the two available systems together. We may also take into account a very rough, provisional classification of the rocks, which serves a certain descriptive purpose in helping us to avoid verbiage. I refer to the division of rocks into two classes, namely, the "basic" and the "acid," to which, if it were valid, a third "neutral" group should be added. These terms, as used by petrographers, have little more than colloquial significance, and serve to indicate whether a rock contains much or little silica. They are, however, objectionable and possibly misleading, for the two terms as used in chemistry have a more precise and quite dissimilar significance. Their fallaciousness can be illustrated by considering the composition of the two fundamental olivines, forsterite and fayalite, Mg_2SiO_4 and Fe_2SiO_4.

Composition of forsterite and fayalite.

	Forsterite.	Fayalite.
SiO_2	42.8	29.5
MgO	57.2	.....
FeO	.....	70.5
	100.0	100.0

Here are two definite orthosilicates of the same simple type which replace each other isomorphously. Chemically they are both neutral salts, and yet one contains 13.3 per cent more silica than the other. The terms acid and basic are here obviously inapplicable, and the case cited is but one of many. It is desirable, then, that the two terms should be, generally speaking, dropped from petrographic usage and replaced by others which do not conflict with good chemical nomenclature.[a] *Acidic* and *basylic* might be better; but a closer subdivision would be effective by using the self-explanatory expressions *persilicic*, *mediosilicic*, and *subsilicic*. Conventionally these terms might represent silica percentages of more than 60, between 50 and 60, and below 50. A more precise definition is undesirable. Another alternative is offered by the words *salic*, *salfemic*, and *femic*, which appear in a classification of rocks to be considered presently.

In the volume upon the "Quantitative Classification of Igneous Rocks,"[b] by W. Cross, J. P. Iddings, L. V. Pirsson, and H. S. Washington, the first-named author has given a very full, critical summary of the different systems of rock classification which had been seriously proposed. To discuss all of these systems, with their nonchemical

[a] A few rocks, consisting mainly of corundum or magnetite—that is, of basic oxides—may be properly termed basic. This is the only important exception to the rule here laid down. A quartz rock, obviously, would be in the highest degree persilicic.

[b] Chicago, University of Chicago Press, 1903.

features, would be impracticable in a work on geochemistry, and also superfluous, for all the details are easily found elsewhere.[a] It will be enough for present purposes to examine the scheme of arrangement offered by the authors of the book just cited and to see how nearly it corresponds with the evidence offered by mineralogy. It is the most complete scheme of its kind that has as yet been suggested and the one most thoroughly worked out; it therefore deserves a very careful consideration.

The quantitative classification starts from the chemical analysis of a rock, and begins with a division of the magmas into two groups, the *salic* and the *femic*. The rock-forming minerals are similarly divided into two principal classes; the one, as its name indicates, being characterized by compounds of *s*ilica and *al*umina, and the others by *fe*rro-*m*agnesian substances. Between the two groups of minerals there is an intermediate *alferric* group, which is given subordinate value in the classification. The salic minerals, including zircon as an accessory, are as follows. (The symbols used for purposes of notation accompany the names of the species.)

Quartz, SiO_2			Q.
Zircon, $ZrO_2.SiO_2$			Z.
Corundum, Al_2O_3			C.
Orthoclase, $K_2O.Al_2O_3.6SiO_2$	or.	Feldspars.	F.
Albite, $Na_2O.Al_2O_3.6SiO_2$	ab.		
Anorthite, $CaO.Al_2O_3.2SiO_2$	an.		
Leucite, $K_2O.Al_2O_3.4SiO_2$	lc.	Lenads,[b] or feldspathoids.	L.
Nephelite, $Na_2O.Al_2O_3.2SiO_2$	ne.		
Kaliophilite, $K_2O.Al_2O_3.2SiO_2$	kp.		
Sodalite, $3(Na_2O.Al_2O_3.2SiO_2).2NaCl$	so.		
Noselite, $2(Na_2O.Al_2O_3.2SiO_2).Na_2SO_4$	no.		

Mineralogically, muscovite, analcite, haüynite, and cancrinite should appear in this list; but they are omitted in order to simplify calculations. Muscovite, for instance, in computing the mineral composition of a rock, is conventionally regarded as if it were a mixture of orthoclase and corundum. Analcite is treated in a similar manner and represented by a mixture of albite, nephelite, and water. One consequence of this procedure is that the *normative* composition of a rock, as calculated from the minerals given in the list, often

[a] Among the modern classifications the following are especially important: H. Rosenbusch, Elemente der Gesteinslehre, p. 66, 1898. J. J. H. Teall, British Petrography, pp. 70–77, 1888. F. Loewinson-Lessing, Compt. Rend. VII Cong. géol. internat., p. 193, 1897. A. Osann, Min. pet. Mitth., vol. 19, p. 351, 1900; vol. 20, p. 399, 1901; vol. 21, p. 365, 1902; vol. 22, pp. 322, 403, 1903. Osann's system is distinctly chemical; the others are mineralogical. See also the "Kern-theorie" of Rosenbusch (Min. pet. Mitth., vol. 11, p. 144, 1900), which is a chemical classification of magmas, and the discussion of it by W. C. Brögger, Die Eruptivgesteine des Kristianiagebietes, pt. 3, p. 302, 1898. A paper by E. Sommerfeldt (Centralbl. Min. Geol. Pal., 1907, p. 2) relates to a part of the Rosenbusch theory.

[b] From leucite and nephelite.

varies from its *actual* or *modal* composition. A rock containing quartz, orthoclase, and muscovite would be represented by a *norm* of quartz, orthoclase, and corundum, with the water of the muscovite left entirely out of consideration. The conventional composition of a rock, its *norm*, may be quite unlike its actual composition or, in the nomenclature of the new system, its *mode*. This method of computation, then, does not profess to represent mineral compositions exactly; and there is therefore danger that in certain cases it may be misleading—that is, if its avowed limitations are not kept constantly in mind. In rocks like the mixture cited above corundum does not normally occur, as may be seen from the experiments by Morozewicz described in the preceding chapter. The intentional variation from reality is simply an evasion of the difficulties which often arise in calculating from the analysis of a rock its mineral composition. As a mathematical device it is perhaps legitimate, but it must not be misinterpreted.

The group of femic minerals, as its name indicates, is dominantly ferromagnesian, but not exclusively so. The species recognized in the classification as standard are as follows:

Acmite, $Na_2O.Fe_2O_3.4SiO_2$	ac.		P.
Sodium metasilicate, $Na_2O.SiO_2$	ns.		
Potassium metasilicate, $K_2O.SiO_2$	ks.		
Diopside, $CaO.(MgFe)O.2SiO_2$	di.		
Wollastonite, $CaO.SiO_2$	wo.		
Hypersthene, $(MgFe)O.SiO_2$	hy.		
Olivine, $2(MgFe)O.SiO_2$	ol.		O.
Akermanite, $4CaO.3SiO_2$	am.		
Magnetite, $FeO.Fe_2O_3$	mt.	H.	M.
Chromite, $FeO.Cr_2O_3$	cm.		
Hematite, Fe_2O_3	hm.		
Ilmenite, $FeO.TiO_2$	il.	T.	
Titanite, $CaO.TiO_2.SiO_2$	tn.		
Perofskite, $CaO.TiO_2$	pf.		
Rutile, TiO_2	ru.		
Apatite, $3(3CaO.P_2O_5).CaF_2$	ap.		A.
Fluorite, CaF_2	fr.		
Calcite, $CaO.CO_2$	cc.		
Pyrite, FeS_2	pr.		
Native metals and other metallic oxides and sulphides.			

Here, as with the salic minerals, certain conventions have been adopted. The two metasilicates of sodium and potassium do not exist as independent mineral species, but appear as possible components of certain pyroxenes and amphiboles. The two last-named groups, moreover, are not separately identified in the table, but are represented by the minerals embraced under the general symbol P. The aluminous ferromagnesian and salic minerals, the *alferric* compounds biotite, garnet, tourmaline, melilite, spinel, and the aluminous pyroxenes and

amphiboles are not taken into account as normative or standard species. In computing the norm of a rock they are treated as mixtures of other molecules by devices like those adopted in the salic division. From the *norm* the *mode* can be approximately calculated by methods which are fully discussed in the "Quantitative Classification." An example of the differences which thus appear may be cited from the discussion of Butte granite, on pages 223–225 of that work. Under *norm* is given the composition in standard or conventional minerals and under *mode* the percentages of the species actually present in the rock.

Composition of Butte granite.

NORM.			MODE.		
Quartz	19.38		Quartz	22.86	
Orthoclase	25.02	66.67	Orthoclase	18.35	58.09
Albite	23.58		Albite	23.06	
Anorthite	18.07		Anorthite	16.68	
Diopside	.67	7.45	Biotite	10.92	14.48
Hypersthene	6.78		Hornblende	3.56	
Magnetite	3.01	4.23	Magnetite	1.86	2.32
Ilmenite	1.22		Ilmenite	.46	
Pyrite	.24	.55	Pyrite	.24	.55
Apatite	.31		Apatite	.31	
Etc	.99		Etc	.85	
	99.27			99.15	

The divergence between convention and reality is evident at a glance. In many cases, however, the norm and mode of a rock are practically identical, and then the standard computation is more satisfactory. The normative and actual minerals may or may not be the same. Some discrepancies, however, exist, to which much weight can not be given. In calculating the percentage of a mineral from the proportions of oxides shown by analysis there is a strong tendency toward the multiplication of errors. Alumina, for instance, is often uncertain, at least in ordinary analyses of fair average quality, by as much as one-half of 1 per cent. This amount corresponds to an error in orthoclase, if all the alumina goes to that mineral, of 2.7 per cent, and the variation entrains others, especially in the estimation of the residual quartz. The computed mineral composition of a rock is incorrect by multiples of the errors existing in the analysis, and these may be, in fact are, sometimes large.

The normal or standard minerals, then, so far as the make-up of a rock is concerned, are partly real and partly conventional. They are, however, quantitative in their application, and give uniformity to the discussion of rocks. Upon them the quantitative classification is founded.

First, all igneous rocks are divided into five classes, which are fixed within certain arbitrary limits by the ratios between the salic and the femic minerals. These classes are as follows:

I. Persalane: Extremely salic..... $\frac{sal}{fem} > \frac{7}{1}$

II. Dosalane: Dominantly salic ..... $\frac{sal}{fem} < \frac{7}{1} > \frac{5}{3}$

III. Salfemane: Equally salic and femic..... $\frac{sal}{fem} < \frac{5}{3} > \frac{3}{5}$

IV. Dofemane: Dominantly femic ..... $\frac{sal}{fem} < \frac{3}{5} > \frac{1}{7}$

V. Perfemane: Extremely femic..... $\frac{sal}{fem} < \frac{1}{7}$

That is, the field between an entirely salic rock and one entirely femic is divided into five parts, each representing a definite range of variation. A rock containing more than seven-eighths of salic minerals to one-eighth femic is in the class persalane; one with less than seven-eighths salic to more than three-eighths femic falls under dosalane, and so on. A granite, for example, containing over 87.5 per cent of quartz and feldspar is placed in Class I; a peridotite with over 87.5 per cent of femic minerals belongs in Class V. Many basalts, gabbros, diorites, etc., contain salic and femic compounds in nearly equal proportions, and are therefore in Class III. From the norm of a rock its class can be determined at once, and in many cases a mere inspection of the analysis is sufficient. The two extreme classes occupy each one-eighth of the field; the other classes divide the remaining six-eighths between them.

The division of classes into subclasses is based upon a previous division among the standard minerals themselves. Thus the salic minerals are grouped as quartz, Q; feldspar, F; lenads, or feldspathoids, L; corundum, C, and zircon, Z. Q, F, and L are placed together as one subclass; C and Z as another. In the femic series we have, first, pyroxenes, P; olivine and åkermanite, O; with the group of iron ores and titanium minerals, M; and, second, the accessories apatite, fluorite, pyrite, etc., represented by A. In Classes I to III the subdivision is effected through the ratio QFL : CZ by the same fivefold process, one-eighth, two-eighths, and so on, as in the formation of classes themselves. In Classes IV and V, the dofemic and perfemic, the ratio POM : A is used in precisely the same way. There are therefore twenty-five subclasses, but the vast majority of igneous rocks belong to the first subclass in each class. These are indicated by the expressions—

$$\frac{QFL}{CZ} > \frac{7}{1} \text{ and } \frac{POM}{A} > \frac{7}{1}$$

the minerals thus given prominence being those which make up the

greater part of the lithosphere. Rocks in which C, Z, or A abound are not common, and their distribution or volume is extremely limited.

After the subclasses come the orders, which are formed according to the proportions, in the rocks, of the preponderating minerals. In Classes I to III the salic minerals are used as a basis for subdivision, and the ratios connecting Q, F, and L are alone considered. Quartz and the lenads, however, are chemically antithetic, and do not occur together; and this leads to a doubling of the ordinary fivefold division of a class, with one term dropped out. That is, each class is divided into nine orders; if there were ten, the fifth and sixth would practically, although not absolutely, repeat each other. These orders are as follows:

1. Perquaric: Quartz extreme ..... $\frac{Q}{F} > \frac{7}{1}$
2. Doquaric: Quartz dominant ..... $\frac{Q}{F} < \frac{7}{1} > \frac{5}{3}$
3. Quarfelic: Equal quartz and feldspar ..... $\frac{Q}{F} < \frac{5}{3} > \frac{3}{5}$
4. Quardofelic: Feldspar dominant ..... $\frac{Q}{F} < \frac{3}{5} > \frac{1}{7}$
5. Perfelic: Feldspar extreme ..... $\frac{Q \text{ or } L}{F} < \frac{1}{7}$
6. Lendofelic: Feldspar dominant ..... $\frac{L}{F} < \frac{3}{5} > \frac{1}{7}$
7. Lenfelic: Equal feldspar and lenad ..... $\frac{L}{F} < \frac{5}{3} > \frac{3}{5}$
8. Dolenic: Lenad dominant ..... $\frac{L}{F} < \frac{7}{1} > \frac{5}{3}$
9. Perlenic: Lenad extreme ..... $\frac{L}{F} > \frac{7}{1}$

In Classes IV and V the femic ratio P+O : M is used to designate the orders. They are:

1. Perpolic: Silicate extreme ..... $\frac{P+O}{M} > \frac{7}{1}$
2. Dopolic: Silicate dominant ..... $\frac{P+O}{M} < \frac{7}{1} > \frac{5}{3}$
3. Polmitic: Silicate and nonsilicate equal ..... $\frac{P+O}{M} < \frac{5}{3} > \frac{3}{5}$
4. Domitic: Nonsilicate dominant ..... $\frac{P+O}{M} < \frac{3}{5} > \frac{1}{7}$
5. Permitic: Nonsilicate extreme ..... $\frac{P+O}{M} < \frac{1}{7}$

In orders 1 to 3 there is also a precisely similar fivefold division into sections, which indicate the proportions between pyroxenes and the olivine subgroup. In orders 4 and 5 a like subdivision into suborders is based upon the ratio H : T, hematite plus magnetite on the *one hand* and the titanium minerals ilmenite, titanite, perofskite,

and rutile on the other. It is not necessary for present purposes to carry these subdivisions out in detail, for the ratios are expressed by precisely the same fractions as appear in the classes and orders.

Up to this point the quantitative classification has been mineralogical, and expressed in terms of the *standard* or *normative* minerals. The division of orders into rangs, however, proceeds on chemical lines, but is still fivefold as before. In Classes I to III, which are characterized by feldspars and lenads, the molecular ratio of *salic* K_2O+Na_2O : *salic* CaO is the determining factor. In Classes IV and V the molecular ratio of *femic* $CaO+(MgFe)O$: *femic* alkalies is considered. By *salic* CaO is meant the lime in salic minerals, such as anorthite; *femic* lime is that in diopside, wollastonite, etc. *Salic* alkalies are found in feldspars and lenads; *femic* alkalies occur in acmite and certain other pyroxenes and amphiboles. In the partition of *actual* minerals, such as the micas, between the two normative groups, the potash of muscovite will go to the salic side, while that of biotite is regarded as femic. Now, uniting K_2O and Na_2O under the general symbol of R_2O, the rangs under the orders of Classes I to III develop thus:

1. Peralkalic ..... $\frac{R_2O}{CaO} > \frac{7}{1}$
2. Domalkalic ..... $\frac{R_2O}{CaO} < \frac{7}{1} > \frac{5}{3}$
3. Alkalicalcic ..... $\frac{R_2O}{CaO} < \frac{5}{3} > \frac{3}{5}$
4. Docalcic ..... $\frac{R_2O}{CaO} < \frac{3}{5} > \frac{1}{7}$
5. Percalcic ..... $\frac{R_2O}{CaO} < \frac{1}{7}$

The nomenclature here would seem to be self-explanatory, but in Classes IV and V a less obvious device is proposed, namely, to indicate *m*agnesium, *ir*on, and *l*ime the word *mirlic* is suggested. Uniting MgO, FeO, and CaO under the symbol RO we now have in the distinctively femic classes these rangs:

1. Permirlic ..... $\frac{RO}{R_2O} > \frac{7}{1}$
2. Domirlic ..... $\frac{RO}{R_2O} < \frac{7}{1} > \frac{5}{3}$
3. Alkalimirlic ..... $\frac{RO}{R_2O} < \frac{5}{3} > \frac{3}{5}$
4. Domalkalic ..... $\frac{RO}{R_2O} < \frac{3}{5} > \frac{1}{7}$
5. Peralkalic ..... $\frac{RO}{R_2O} < \frac{1}{7}$

The femic rangs are again subjected to a fivefold subdivision into sections, depending upon the ratio $(MgFe)O : CaO$; and they are also

divided into subrangs which indicate the ratio between magnesia and ferrous oxide. So also, in Classes I to III there are subrangs based upon the alkalies alone, and these are called, respectively, perpotassic, dopotassic, sodipotassic, dosodic, and persodic. These subrangs are still further divisible in such manner as to show the ratios between the lenad minerals leucite and nephelite, and sodalite and noselite, and either of these pairs may be subdivided in the same way. In some of these cases a threefold division is employed instead of the usual method. In Classes II, III, and IV the rangs are again divided into grads, which serve to classify the subordinate minerals. In Classes II and III the subordinate femic group is divided according to the ratio P+O:M, just as in forming the orders of Classes IV and V. In Class IV the subordinate salic minerals serve to designate five grads, depending upon the relations between quartz, feldspars, and lenads. In Class III there is also a threefold discrimination between pyroxene and olivine, forming the sections prepyric, pyrolic and preolic. Furthermore, precisely as rangs are formed within orders, so subgrads are formed within grads. That is, the ratios $RO:R_2O$; $R_2O:CaO$; $(MgFe)O:CaO$; and $MgO:FeO$ are used to express between subordinate minerals the same relations that hold in forming the larger divisions of the classification.

The quantitative classification, then, takes pairs of factors, and divides each pair, with a few limitations only, into five terms, expressive of different ratios. This process, obviously, can be carried out to any desired degree of minuteness; but for most practical purposes four subdivisions are generally enough. These may be stated as classes, orders, rangs, and subrangs; the subclasses, suborders, grads, etc., being less useful in actual work. In order to express the composition of a rock, or, more precisely, of a magma, a simple notation has been devised, which makes use of numerals to indicate the several subdivisions. Thus the symbol II.5.2.3 indicates that the magma which it represents belongs in Class II, dosalane; order 5, perfelic; rang 2, domalkalic; and subrang 3, sodipotassic.[a] That such a system is convenient we can see at a glance; but its limitations, due to the distinction between normative and actual minerals, must never be overlooked. Analyses are readily classified and summarized by the system; as regards minerals it is confessedly incomplete. The important *alferric* minerals muscovite, biotite, augite, and hornblende fall outside of the classification, and have to be expressed by means of a recalculation from a norm into a mode. It is an artificial classification of great provisional value; but its ultimate standing is yet to be determined by the severe tests of experience. Even if it should be finally adopted by all petrologists,

[a] For the detailed development of this notation, which can be extended to grads and subgrads, see H. S. Washington, Prof. Paper U. S. Geol. Survey No. 28, pp. 13–15, 1904.

some form of classification like that now in vogue would have to be retained with it. Good analyses can not be obtained for every rock which the geologist is called upon to determine, and in many cases he must be content with the results of a microscopic examination. He can then say at once that a certain rock consists of alkali feldspar, quartz, and subordinate femic minerals, and so define it as a granite or rhyolite. To accurately name its subrang is a more troublesome matter, and impracticable without analytical data.[a] In short, the quantitative system can only be applied to the classification of rocks which have been quantitatively studied, but then it yields results of unquestionable utility. It brings to light magmatic analogies which might not be recognized without its aid, and so assists in the comparison of magmas and in the study of their differentiation. From the application of the classification to the study of rocks, one highly beneficent result has already followed. The two memoirs of H. S. Washington,[b] in which he has collected and classified all the trustworthy rock analyses which had been recorded between 1869 and 1900, are of the highest value and go far to justify the system.

COMPOSITION OF ROCKS.

Now, passing on from the general statements relative to classifications, we may consider the actual composition of rocks as revealed by chemical analysis. In order to do this most advantageously, and to compare classifications, the ordinary mineralogical grouping will be followed, but the rocks within each group will be arranged in the order of the quantitative system, and the brief description of each one will precede the analyses. To the descriptions the magmatic symbols and magmatic names are appended, and after each table the composition of the *norms*, as found in Washington's tables, will be given. We shall thus be able to see how nearly the two classifications coincide, and so be better fitted to judge of their comparative merits. As a rule, the analyses are those which have been made in the laboratory of the United States Geological Survey, and are cited from the collection published in Bulletin No. 228. Only those are selected which have been characterized by Washington as excellent. In a few cases analyses from other sources must be used, but due credit will be given. Since rocks are aggregates of minerals, all sorts of interme-

[a] The need of rock names for field use is fully recognized by the authors of the quantitative system.

[b] Prof. Papers U. S. Geol. Survey Nos. 14 and 28. For analyses made in the laboratories of the Survey, down to January 1, 1904, see also Bull. No. 228. For an extended application of the quantitative classification, see Washington's Roman Comagmatic Region, Pub. No. 51 of the Carnegie Institution, 1906. For reviews and criticisms of the new system, see A. Michel Lévy, Bull. Carte géol. France, No. 92, 1903; A. H[arker], Geol. Mag. 1903, p. 173; J. W. Evans, Science Progress, vol. 1, p. 259, 1906; E. B. Mathews, Am. Geologist, vol. 31, p. 399, 1903; and L. Milch, Centralbl. Min. Geol. Pal., 1903, p. 677.

diate variations are possible, but in a work of this general character such minor details of classification must be ignored. Only the larger features of the subject can be taken into account.

THE RHYOLITE-GRANITE GROUP.

In Class I of the quantitative classification, order 1, perquaric, is represented by rocks which consist mainly of quartz, such as quartz veins and segregations of igneous origin. In order 2, doquaric, Washington places a few rocks which contain from 53 to 69 per cent of quartz, but none of them is particularly important. It is in order 3, quarfelic, that the noteworthy rocks begin to appear, and a large number of them belong in the familar group of rhyolites and granites. With this group it is convenient to begin.

In the broadest sense, granite may be defined as a holocrystalline, plutonic rock, consisting chiefly of quartz and an alkali feldspar, the latter being commonly orthoclase or microcline. A soda granite is one containing a soda feldspar, preferably anorthoclase. With these dominant minerals there may be, and usually are, subordinate species, such as muscovite, biotite, hornblende, etc. Hence the varieties muscovite granite, biotite granite or granitite, hornblende granite, tourmaline granite, and the like. When only quartz and feldspar are present the rock is called aplite, although it must be observed that this term is often used in other senses.[a] Rhyolite is the eruptive equivalent of granite and has the same chemical composition. The minerals which develop individually in it are also broadly the same, quartz and alkali feldspar largely predominating. Rhyolite, however, very commonly contains more or less undifferentiated glass, and obsidian is a wholly vitreous variety. The quartz porphyries, which are intermediate between granites and rhyolites, are old, devitrified forms of the latter. Nevadite, liparite, and quartz trachyte are synonyms for rhyolite. The differences between granite and rhyolite are structural and genetic; chemically and magmatically they are the same. This essential identity of composition appears in the subjoined tables of analyses. First in order come the rhyolites.

Analyses of rhyolites.

A. From Buena Vista Peak, Amador County, California. Analysis by W. F. Hillebrand. Described by H. W. Turner as containing sanidine, quartz, and biotite in a glassy groundmass. Magmatic symbol, I.3.1.2. *Magdeburgose.*

B. From near Willow Lake, Plumas County, California. Analysis by Hillebrand. Described by J. S. Diller as containing phenocrysts of quartz and feldspar, in a groundmass of the same materials. Symbol, I.3.1.3. *Alaskose.*

[a] On account of this ambiguity in the use of the word aplite, J. E. Spurr has proposed the name "alaskite" for rocks of this character. For the corresponding eruptive or fine-grained porphyritic rocks the term "tordrillite" is offered. Am. Geologist, vol. 25, p. 229, 1900. On the formation of granite see H. Le Chatelier, Ann. mines, 8th ser., *vol. 13, p. 232,* 1888.

C. Obsidian, Obsidian Cliff, Yellowstone National Park. Analysis by J. E. Whitfield. Described by Arnold Hague and J. P. Iddings. A glass, containing microlites of augite and ferric oxide, with traces of quartz and feldspar. Symbol, I.3.1.3. *Alaskose.*

D. From Madison Plateau, Yellowstone National Park. Analysis by Whitfield. Not described. Symbol, I.3.1.4.

E. From the Hyde Park dike, Butte district, Montana. Analysis by H. N. Stokes. Contains, according to W. H. Weed, sanidine, quartz, plagioclase, and biotite, in a groundmass of quartz and feldspar. Symbol, I.3.2.3. *Tehamose.*

F. From "Elephant's Back," Yellowstone National Park. Analysis by Whitfield. Reported by J. P. Iddings to contain quartz and sanidine, with a little augite and magnetite, in a glassy groundmass. Symbol, I.3.2.3. *Tehamose.*

G. From Haystack Mountain, Aroostook County, Maine. Analysis by Hillebrand. Described by H. E. Gregory. Contains quartz, albite, and orthoclase, with titanite and accessory chlorite and kaolin. Symbol, I.4.1.3. *Liparose.*

H. From Crater Lake, Oregon. Analysis by Stokes. Described by H. B. Patton. Contains plagioclase, hornblende, hypersthene, and magnetite, in a glassy groundmass crowded with microlites of feldspar and augite. Symbol, I.4.2.4. *Lassenose.*

	A.	B.	C.	D.	E.	F.	G.	H.
SiO_2	73.23	74.24	75.52	75.19	74.34	75.34	75.98	71.87
Al_2O_3	12.73	14.50	14.11	13.77	12.97	12.51	12.34	14.53
Fe_2O_3	.99	1.27	1.74	.61	.75	.42	.85	1.28
FeO	.16	.67	.08	1.37	.54	1.55	.93	1.02
MgO	.22	.25	.10	.09	.86	.32	.15	.48
CaO	.61	.11	.78	.68	.85	1.07	.13	1.59
Na_2O	1.91	3.00	3.92	3.83	2.49	3.31	4.02	5.08
K_2O	5.17	3.66	3.63	3.33	4.72	4.17	4.44	2.84
H_2O-	.53	.....	} .39	} .65	1.03	} .86	.24	.06
H_2O+	4.51	2.04			1.11		.64	.22
TiO_2	.09	.20	none	none	.18	none	.17	.41
ZrO_2	.....	.....	.....	.....	.05	.....	.03	.04
P_2O_5	.02	.07	.....	none	.07	none	.03	.10
MnO	trace	.06	none	trace	trace	.07	trace?	.....
BaO	.02	.18	.....	.....	.07	.....	.07	.08
SrO	none	trace	.....	.....	trace	.....	trace?	.03
Li_2O	trace	none	.....	.02	trace	trace	.....	trace
SO_3	.....	.03	.....	.29	.03	.42	.....	.....
FeS_2	.....	.....	.11	.....	.....	.....	none	.....
Cl	.....	.....	.....	.....	.....	.....	.....	trace
	100.19	100.28	100.38	99.83	100.06	100.04	100.02	99.63

NORMS.

	A.	B.	C.	D.	E.	F.	G.	H.
Q	40.7	42.0	36.7	38.2	38.7	36.1	35.1	27.4
or	31.1	21.7	21.7	19.5	27.8	25.0	26.1	16.7
ab	15.7	25.2	33.0	32.0	21.0	27.8	33.5	43.0
an	2.8	.6	3.9	3.3	4.2	5.6	.6	8.1
C	3.0	5.4	2.2	2.8	2.2	.4	.8	.....
hy	.6	.6	.3	2.2	2.4	3.3	1.4	1.2
mt	.5	1.9	.2	.9	1.2	.7	1.2	1.4
hm	1.1	.....	1.6	.....	.....	.....	.....	.....
il	.....	.....	.....	.....	.....	.....	.....	.8

The following analyses represent quartz porphyry:

Analyses of quartz porphyry.

A. From near Blowing Rock, Watauga County, North Carolina. Analysis by W. F. Hillebrand. Reported by A. Keith to contain quartz and orthoclase, with subordinate sericite, chlorite, and biotite. Magmatic symbol, I.3.1.2. *Magdeburgose.*

B. From the Modoc mine, Butte district, Montana. Analysis by Hillebrand. Contains, according to W. H. Weed, quartz, orthoclase, and plagioclase in a groundmass of quartz and feldspar. Symbol, I.4.2.3. *Toscanose.*

C. From Prospect Mountain, Leadville district, Colorado. Analysis by L. G. Eakins. Described by W. Cross. Contains orthoclase, plagioclase, quartz, biotite, apatite, magnetite, and zircon. Symbol, *I.4.2.3. Toscanose.*

D. From the Swansea mine, Tintic district, Utah. Analysis by H. N. Stokes. Described by G. W. Tower and G. O. Smith. Contains feldspar, quartz, magnetite, apatite, secondary pyrite, and a little chlorite and biotite. Symbol, I.4.2.3. *Toscanose.*

E. From Grizzly Mountains, Plumas County, California. Analysis by Hillebrand. Contains, according to H. W. Turner, quartz, feldspar, and pyrite, in a fine groundmass. Symbol, I.4.2.3. *Toscanose.*

	A.	B.	C.	D.	E.
SiO_2	79.75	69.95	73.50	71.56	73.25
Al_2O_3	10.47	15.14	14.87	14.27	13.25
Fe_2O_3	.64	.38	.95	.89	.....
FeO	.92	.83	.42		1.74
MgO	.13	.56	.29	.42	.28
CaO	.15	1.45	2.14	1.18	2.23
Na_2O	1.36	2.70	3.46	3.00	2.69
K_2O	6.01	6.36	3.56	4.37	3.79
H_2O-	.08	.40	.90	.36	.07
H_2O+	.60	.91		.79	1.03
TiO_2	.15	.24	.....	.38	trace
ZrO_2	.05	.02	.....	.....	.....
CO_2	.....	.37	.....	none	1.05
P_2O_5	trace	.10	none	.13	trace
MnO	trace	.08	.03	trace	trace
BaO	.06	.13	.....	.28	trace
SrO	trace	.02	trace	trace	trace?
Li_2O	trace	trace	.....	none	trace
Cr_2O_3	.....	.....	.....	trace	.....
V_2O_3	.....	.....	.....	.01	.....
Cl	.....	.....	.....	.06	.....
Cu	.....	.03	.....	.....	.....
FeS_2	.....	.39	.....	2.29	.58
	100.37	100.06	100.12	99.99	99.96

NORMS.

	A.	B.	C.	D.	E.
Q	47.8	25.5	34.7	34.2	30.1
or	35.6	37.8	21.1	26.1	33.9
ab	11.5	22.5	29.3	25.2	22.5
an	.8	7.2	10.6	5.8	7.2
C	1.4	1.1	1.4	2.5	.....
di	.....	.....	.....	.....	3.2
hy	1.4	2.7	.7	1.1	2.3
mt	.8	1.1	1.4	.9	.....
hm	.....	.....	.....	.....	.....
il	.....	.5	.....	.....	.....
pr	.....	.....	.....	2.3	.6

The subjoined analyses of granites are all by W. F. Hillebrand:[a]

Analyses of granites.

A. From Currant Creek Canyon, near Pikes Peak, Colorado. Described by E. B. Mathews. Contains microcline, quartz, muscovite, and sericitic aggregates replacing plagioclase and a part of the microcline. Magmatic symbol, I.3.1.2. *Magdeburgose.*

B. Biotite granite, Sentinel Point, Pikes Peak, Colorado. Described by Mathews. Contains microcline, microcline-perthite, quartz, biotite, a little oligoclase, and accessory fluorite, apatite, zircon, sphene, allanite, and magnetite. Symbol, 1.3.1.3. *Alaskose.*

C. From Currant Creek Canyon, Pikes Peak, Colorado. Described by Mathews. Contains perthitic microcline, quartz, biotite, muscovite, altered plagioclase, and flakes of limonite. Symbol, I.4.1.2. *Omeose.*

D. Biotite granite, Mount Ascutney, Vermont. Described by R. S. Daly. Contains quartz, orthoclase, plagioclase, biotite, magnetite, sphene, apatite, and zircon. Symbol, I.4.1.3. *Liparose.*

E. Soda granite, Pigeon Point, Minnesota. Described by W. S. Bayley. Contains feldspar, quartz, chlorite, some muscovite, rutile, leucoxene, hematite, and apatite, and sometimes secondary calcite. Symbol, I.4.1.3. *Liparose.*

[a] A. Gautier (Compt. Rend., vol. 132, p. 932, 1901) found traces of nitrogen, argon, arsenic, and iodine in granite.

F. Granitite, near Florissant, Colorado. Described by Mathews. Contains microcline, albite, quartz, and biotite. Symbol, I.4.1.4. *Kallerudose.*

G. Granite, Big Timber Creek, Crazy Mountains, Montana. Reported by J. E. Wolff as containing quartz, orthoclase, oligoclase, and biotite. Symbol, I.4.2.3. *Toscanose.*

H. Aplite, Yuba Gap, Sierra County, California. Described by H. W. Turner. Contains orthoclase, quartz, plagioclase, a little microcline, brown mica, and iron ore. Symbol, I.4.2.3. *Toscanose.*

	A.	B.	C.	D.	E.	F.	G.	H.
SiO_2	74.40	77.03	73.90	71.90	72.42	75.92	74.37	76.03
Al_2O_3	14.43	12.00	13.65	14.12	13.04	12.96	13.12	13.39
Fe_2O_3	.89	.76	.28	1.20	.68	.33	.73	.48
FeO	.22	.86	.42	.86	2.49	1.40	.87	.31
MgO	.07	.04	.14	.33	.58	trace	.35	.05
CaO	.58	.80	.23	1.13	.66	.15	1.26	1.28
Na_2O	1.76	3.21	2.53	4.52	3.44	4.60	2.57	2.98
K_2O	6.56	4.92	7.99	4.81	4.97	4.15	6.09	5.18
H_2O-	.15	.14	.16	.18	1.21	.16	.05	.15
H_2O+	.92	.30	.33	.42		.32	.25	.34
TiO_2	.12	.13	.07	.35	.40	.05	.29	.07
ZrO_2	.....	.....	.....	.04	.....	.....	.....	.....
CO_2	.....	.....	.....	.21	.....	.03	.....	.....
P_2O_5	.22	trace	.05	.11	.20	trace	.06	.03
MnO	trace	trace	trace	.05	.09	.04	trace	trace
BaO	trace	trace	trace	.04	.15	trace	.10	.04
SrO	none	none	none	.....	trace?	none	trace	trace
Li_2O	trace	trace	trace	.....	trace?	trace	trace	none
F	.04	.36	none	.06	.....	.12	.....	.....
Cl	.....	.....	.....	.02	trace	.....	.....	.....
FeS_2	.....	.....	.....	trace	.....	.....	.....	.....
	100.36	100.55	99.75	100.35	100.33	100.23	100.11	100.33

NORMS.

	A.	B.	C.	D.	E.	F.	G.	H.
Q	37.3	37.5	28.0	24.5	29.4	32.0	33.1	36.3
or	38.9	29.5	47.3	28.4	30.0	24.5	36.1	30.6
ab	14.7	26.7	21.0	37.7	28.8	38.8	22.0	25.2
an	2.8	3.9	1.1	4.2	3.2	.8	5.8	5.0
C	3.5	.....	.5	.....	.8	.6	.....	.....
di	.....	.....	.....	1.1	.....	.....	.....	1.0
hy	1.7	.....	.8	.3	5.0	2.2	1.2	.....
mt	.2	1.7	.5	1.9	.9	.2	1.1	.7
il	.....	.....	.....	.6	.8	.....	.6	.....

All of the rocks here cited belong in the first subclass of Class I and lie between the limits indicated by the symbols I.3.1.2 and I.4.2.4. Some granites appear in Washington's tables under Class II, but they are few in number and represent, probably, intermediate gradations toward the syenites. So far as the foregoing analyses are concerned, they show that up to this point the quantitative and mineralogical classification coincide fairly well and that the *norms* can not vary very much from the *modes*. The normative corundum [a] probably represents the micas, either muscovite or biotite, or both, so that the actual orthoclase of these rocks must be lower than is shown in the norms. The latter show with sufficient emphasis that quartz and alkali feldspars are the most important minerals in the granite-rhyolite group and that the rocks differ chiefly in the varying pro-

[a] Or undistributed alumina.

portions of quartz, orthoclase or microcline, and albite or anorthoclase. The presence of much muscovite in a granite, however, would increase the divergence between norm and mode, and even throw the rock into some other order than those shown by the limiting symbols just given.

THE TRACHYTE-SYENITE GROUP.

The trachyte-syenite series of rocks differs from the rhyolite-granite series in being free, or nearly so, from quartz. The trachytes, like the rhyolites, are eruptive rocks; the syenites resemble granite in their plutonic origin. Between trachyte and syenite there are intermediate forms, analogous to the quartz porphyries. All of these rocks contain principally alkali feldspars, with subordinate femic minerals, and often alferric species such as hornblende or mica. These minor constituents are recognized in nomenclature by such terms as biotite trachyte, mica syenite, hornblende syenite, etc. There are also many varietal names, which are based on minor distinctions. The nepheline syenites will be considered separately. The following analyses represent typical examples within the series as defined here:

Analyses of trachyte-syenite rocks.

A. Nordmarkite, Mount Ascutney, Vermont. Analysis by W. F. Hillebrand; description by R. S. Daly. Contains orthoclase, plagioclase, quartz, hornblende, magnetite, apatite, and zircon, with very little biotite, titanite, diopside, and allanite. Magmatic symbol, I.5.1.3. *Phlegrose.*

B. Quartz syenite porphyry, Gray Butte, Bearpaw Mountains, Montana. Analysis by H. N. Stokes. Described by W. H. Weed and L. V. Pirsson. Contains anorthoclase, microlites of plagioclase, ægirite, augite, quartz, and apatite, with an occasional zircon and traces of biotite. Symbol, I.5.1.4. *Nordmarkose.*

C. Biotite trachyte, Dike Mountain, Yellowstone National Park. Analysis by Hillebrand. Reported by Arnold Hague and T. A. Jaggar as containing plagioclase, orthoclase, biotite, magnetite, and chlorite. Symbol, I.5.1.4. *Nordmarkose.*

D. Soda syenite porphyry, Moccasin Creek, Tuolumne County, California. Analysis by Stokes. Described by H. W. Turner. Consists mainly of albite, with possibly ægirite. Symbol, I.5.1.5. *Tuolumnose.*

E. Soda syenite, Douglas Island, Alaska. Analysis by Hillebrand. Described by G. F. Becker. Contains mostly albite, with secondary quartz, calcite, and pyrite. Symbol, I.5.1.5. *Tuolumnose.*

F. Biotite trachyte, Dike Mountain, Yellowstone National Park. Analysis by Hillebrand. Reported by Hague and Jaggar to contain orthoclase, plagioclase, biotite, and chlorite. Symbol, I.5.2.3. *Pulaskose.*

G. Augite syenite porphyry, Copper Creek Basin, Yellowstone National Park. Analysis by Hillebrand. Contains, according to Hague and Jaggar, augite, biotite, orthoclase, a little hornblende, and quartz. Symbol, I.5.2.4. *Laurvikose.*

H. Augite syenite, Turnback Creek, Tuolumne County, California. Analysis by Stokes. Reported by Turner to contain orthoclase and augite, with less plagioclase and quartz. Symbol, II.5.1.2. *Highwoodose.*

I. Syenite, Yogo Peak, Little Belt Mountains, Montana. Analysis by Hillebrand. Described by Weed and Pirsson. Contains orthoclase, oligoclase, quartz, apatite, titanite, iron ores, pyroxene, hornblende, and biotite, with traces of decomposition products. Symbol, II.5.2.3. *Monzonose.*

J. Syenite, La Plata Mountains, Colorado. Analysis by Stokes. Reported by W. Cross to contain much alkali feldspar, some oligoclase, augite, biotite, and hornblende, with a little titanite, magnetite, and apatite. Symbol, II.5.2.3. *Monzonose.*

K. Syenite, Crazy Mountains, Montana. Analysis by Hillebrand. Reported by J. E. Wolff to contain anorthoclase, hornblende, augite, sphene, apatite, and magnetite. Symbol, II.5.2.4. *Akerose.*

	A.	B.	C.	D.	E.	F.	G.	H.	I.	J.	K.
SiO_2	65.43	66.22	63.24	67.53	63.01	57.73	64.40	61.28	61.65	59.79	58.28
Al_2O_3	16.11	16.22	17.98	18.57	18.47	18.93	16.90	14.71	15.07	17.25	17.89
Fe_2O_3	1.15	1.98	2.67	1.13	.06	1.97	1.86	1.21	2.03	3.60	3.20
FeO	2.85	.16	.85	.08	.32	1.92	1.37	2.85	2.25	1.59	1.73
MgO	.40	.77	.63	.24	.06	.91	1.13	1.69	3.67	1.24	1.51
CaO	1.49	1.32	.93	.55	2.66	2.78	2.60	5.61	4.61	3.77	3.69
Na_2O	5.00	6.49	6.27	11.50	10.01	5.52	5.79	2.99	4.35	5.04	5.89
K_2O	5.97	5.76	5.47	.10	.39	6.11	4.56	7.70	4.50	5.05	5.34
H_2O-	.19	.08	.37	.15	.05	.22	.16	.28	.26	.19	.17
H_2O+	.39	.24	.80	.31	.27	2.93	.39	.43	.41	.39	.98
TiO_2	.50	.22	.38	.07	.13	.33	.23	.41	.56	.67	.64
ZrO_2	.11	.....	trace	.....	.....	trace	.02	.....	.....	.....	.....
CO_2	.....	.....	none	.....	2.01	.26	none	.....	.....	.72	.....
P_2O_5	.13	.10	.22	.11	.06	.25	.21	.16	.33	.35	.26
SO_3	.....	.02	.....	trace	.....	.....	.....	.08	.....	.04	.....
Cl	.05	.04	.....	.....	.....	.....	.....	.....	.....	.....	.....
F	.08	trace	.....	trace	.....	.....	.....	.....	.....	.....	.....
MnO	.23	trace	.04	trace	.06	.06	.07	trace	.09	.20	.06
BaO	.03	.29	.25	.....	.02	.16	.27	.72	.27	.14	.36
SrO	.....	.06	.03	trace	trace	.09	.14	.04	.10	.11	.05
V_2O_3	.....	.....	.01	.....	.01	.01	.....	.....	.....	.....	.....
Li_2O	.....	trace	trace	.....	none	trace	trace	.....	trace	trace	trace
FeS_2	.07	.....	trace	.....	2.10	.02	.....	.....	.....	.....	.....
	100.18	99.97	100.14	100.34	99.69	100.20	100.10	100.16	100.15	100.14	100.05

NORMS.

	A.	B.	C.	D.	E.	F.	G.	H.	I.	J.	K.
Q	8.8	5.3	2.8	.....	.....	.....	7.1	3.4	6.2	3.1	.....
or	35.6	33.9	32.8	0.6	2.2	36.1	27.2	45.6	26.7	30.6	31.7
ab	42.4	51.9	52.9	95.4	83.3	37.7	48.7	25.2	36.7	42.4	41.9
an	3.6	.....	4.4	.....	4.4	8.6	6.7	3.9	8.3	9.5	6.4
ne	.....	.....	.....	.....	.6	4.8	.....	.....	.....	.....	4.3
ac	.....	2.8	.....	1.4	.....	.....	.....	.....	.....	.....	.....
di	3.4	1.4	.....	1.3	1.2	4.5	5.2	16.0	11.9	6.7	8.0
wo	.....	1.6	.....	.5	3.1	.....	.....	1.9	.....	.....	.....
hy	2.4	.....	1.6	.....	.....	.....	.8	.....	5.0	.....	.....
ol	.....	.....	.....	.....	.....	1.0	.....	.....	.....	.....	.....
mt	2.1	.....	1.6	.2	.....	3.0	2.8	1.6	3.3	3.2	4.6
hm	.....	1.0	1.6	.5	.....	.....	.....	.....	.....	1.4	.....
il	.9	.3	.8	.....	.3	.6	.5	.8	1.1	1.2	1.2
pr	.....	.....	.....	.....	2.1	.....	.....	.....	.....	.....	.....
ap	.....	.....	.....	.....	.....	.....	.....	.....	.....	.8	.7

The rocks of this group, being deficient in quartz, tend to run lower in silica than the granites and rhyolites. Their magmatic range is between I.5.1.3 and II.5.2.4; so that, despite their mineralogical similarities, they are divided between two classes, but fall within each class into the same order, the perfelic. With decrease of quartz, at one end of the series, they shade into rocks in which the femic minerals are no longer subordinate. Among these femic rocks are found varieties which have been named minette, kersantite, lamprophyre, and shonkinite. Some of these terms are vaguely used, and are very often applied to rocks of a transitional character which contain considerable amounts of soda-lime feldspars. The subjoined analyses represent some of these femic syenites:

Analyses of femic syenites.

A. Soda minette, Brathagen, Laugendal, Norway. Analysis by V. Schmelck. Described by W. C. Brögger.[a] Contains, in approximate percentages, 54 soda feldspar, 29 lepidomelane, 13 ægirine-augite, 2½ apatite, and 1 sphene. Magmatic symbol, II.5.2.4. *Akerose.*

[a] Die Eruptivgesteine des Kristianiagebietes, vol. 3, p. 130, 1898.

B. Soda minette, Haö, Langesund Fjord, Norway. Analysis by Schmeick, description by Brögger.[a] Contains about 51¼ per cent soda feldspar, 26.5 lepidomelane, 16¼ diopside, 2¾ each of apatite and sphene. Symbol, II.6.1.4. *Laurdalose.*

C. Syenitic lamprophyre, Two Buttes, Prowers County, Colorado. Analysis by W. F. Hillebrand. Contains, according to W. Cross, alkali feldspar, diopside, biotite, magnetite, and olivine. Symbol, III.5.2.2. *Prowersose.*

D. Shonkinite, Beaver Creek, Bearpaw Mountains, Montana. Analysis by H. N. Stokes. Described by W. H. Weed and L. V. Pirsson. Contains anorthoclase, diopside, biotite, iron ores, and apatite, with a very little olivine and nephelite. Symbol, III.5.1.3.

E. Shonkinite, Yogo Peak, Little Belt Mountains, Montana. Analysis by Hillebrand. Described by Weed and Pirsson. Contains augite and orthoclase, with biotite, iron ore, andesine, apatite, olivine, and a trace of kaolin. Symbol, III.6.2.3. *Shonkinose.*

	A.	B.	C.	D.	E.
SiO_2	51.22	51.95	50.41	50.00	48.98
Al_2O_3	17.56	14.95	12.27	9.87	12.29
Fe_2O_3	3.51	4.09	5.71	3.46	2.88
FeO	4.34	5.70	3.06	5.01	5.77
MgO	3.22	3.54	8.69	11.92	9.19
CaO	4.52	6.10	7.08	8.31	9.65
Na_2O	5.72	5.43	.97	2.41	2.22
K_2O	4.37	4.45	7.53	5.02	4.96
H_2O- }	1.93	1.10	.46	.17	.26
H_2O+ }			1.80	1.16	.56
TiO_2	1.70	1.95	1.47	.73	1.44
CO_2	.60	.....	.....	.31	.....
P_2O_5	1.08	1.15	.46	.81	.98
SO_3	.....	.....	none	.02	.....
Cl	.....	.....	trace	.08	.....
F	.....	.....	trace?	.13	.22
V_2O_3	.....	.....	.03	.....	.....
Cr_2O_3	.....	.....	.....	.11	trace
MnO	.20	.30	.15	trace	.08
NiO	.....	.....	.04	.07	.....
BaO	.....	.....	.23	.32	.43
SrO	.....	.....	.06	.07	.08
Li_2O	.....	.....	trace	trace	trace
	99.97	100.71	100.42	100.01	99.99

NORMS.

	A.	B.	C.	D.	E.
or	25.6	26.1	44.5	29.5	29.5
ab	32.0	28.3	4.2	8.9	5.3
an	9.5	3.3	6.7	1.1	8.6
ne	8.8	9.7	2.3	6.2	6.8
di	5.3	16.8	20.4	28.9	26.5
ol	5.6	3.2	8.6	14.8	11.7
mt	5.1	6.0	5.8	5.1	4.2
il	3.2	3.7	2.8	1.4	2.6
ap	2.5	2.7	1.0	1.7	2.2
hm	.....	.....	1.6	.....	.....

A comparison of the norms under A and B with the modes as given by Brögger will show how widely the two diverge. These two rocks are in Class II; the others, on account of their higher proportion of femic minerals, fall in Class III. All five of the rocks contain micas, which accounts for some of the differences between the magmatic and the mineralogical composition. In A and B, also, sphene is reported, while in the norms the titanium is reckoned entirely as ilmenite.

[a] Die Eruptivgesteine des Kristianiagebietes, vol. 3, p. 139, 1898.

NEPHELITE ROCKS.

In the norms of the foregoing rocks small quantities of nephelite appear. These mark a transition from the syenites and trachytes proper, to the phonolites and nepheline syenites, in which the lenad minerals replace the alkali feldspars to a greater or less extent. Taking the nephelite rocks first in order, we find an eruptive and a deep-seated group, just as with the trachyte-syenite series. Quartz is excluded from these rocks, for if it were introduced in excess into the magma it would convert the lenads into feldspars, nephelite into albite, and leucite into orthoclase. In phonolite we have commonly orthoclase, nephelite, and pyroxene; tinguaite is a varietal name. Some rocks richer in femic minerals than the phonolites have been classed with the basaltic basanites, but they contain so little soda-lime feldspar that it is well to include them in the following table, as allied to phonolite chemically. The subjoined data relate to members of the eruptive series.

Analyses of eruptive nephelite rocks.[1]

A. Phonolite, Southboro, Massachusetts. Analysis by H. N. Stokes. Collected by B. K. Emerson, but not described. Magmatic symbol, I.6.1.4. *Miaskose.*

B. Phonolite, Black Hills, South Dakota. Analysis by W. F. Hillebrand. Described by W. Cross. Contains orthoclase, nephelite, ægirite, noselite, sodalite, sphene, apatite, and zircon; also secondary zeolites and calcite, but no magnetite. Symbol, I.6.1.4. *Miaskose.*

C. Phonolite, Cripple Creek, Colorado. Analysis by Hillebrand. Described by Cross. Contains orthoclase, nephelite, sodalite, noselite, ægirite, etc. Symbol, I.6.1.4. *Miaskose.*

D. Phonolite, Pleasant Valley, Colfax County, New Mexico. Analysis by Hillebrand. Reported by Cross to contain nephelite, alkali feldspar, ægirite, traces of magnetite, and a little noselite or sodalite. Symbol, I.6.1.4. *Miaskose.*

E. Tinguaite, Bear Creek, Bearpaw Mountains, Montana. Analysis by Stokes. Described by W. H. Weed and L. V. Pirsson. Contains orthoclase, nephelite, cancrinite, augite, ægirite, apatite, a little sodalite, and a doubtful hornblende. Symbol, II.6.1.3. *Judithose.*

F. Phonolite, Uvalde County, Texas. Analysis by Hillebrand. Reported by Cross to contain orthoclase, nephelite, and ægirite, with a very little hornblende, augite, and magnetite. Symbol, II.6.1.4. *Laurdalose.*

G. Basanite, near Big Mountain, Uvalde County, Texas. Analysis by Hillebrand; description by Cross. Contains alkali feldspar, augite, magnetite, olivine, nephelite, ægirite, biotite, and zeolitic minerals. Symbol, II.6.2.4. *Essexose.*

H. Basanite, Mount Inge, Uvalde County, Texas. Analysis by Hillebrand; description by Cross. Contains orthoclase, nephelite, hornblende, augite, ægirine-augite, olivine, magnetite, apatite, and a trace of pyrite. Symbol, II.7.1.4. *Lujavrose.*

	A.	B.	C.	D.	E.	F.	G.	H.
SiO_2	54.22	57.86	58.98	56.24	57.46	54.42	48.23	48.13
Al_2O_3	20.20	20.26	20.54	21.43	15.40	20.76	17.43	18.44
Fe_2O_3	2.35	2.35	1.65	2.01	4.87	2.64	2.77	3.41
FeO	1.02	.39	.48	.55	.87	1.33	5.92	4.30
MgO	.29	.04	.11	.15	1.37	.22	2.99	3.06
CaO	.70	.89	.67	1.38	2.59	1.34	6.38	5.89
Na_2O	9.44	9.47	9.95	10.53	5.48	10.41	6.87	8.00
K_2O	4.85	5.19	5.31	5.74	9.44	4.89	2.78	3.80
H_2O-	.42	.21	.19	.12	.09	.22	.54	.18
H_2O+	5.57	2.40	.97	.86	.82	2.50	2.84	1.59
TiO_2	.38	.22	.24	.26	.60	.40	2.00	1.74
ZrO_2	.....	.15	.20	.09	.....	.15	.04	.05
CO_2	.....	.....	.....	.....	.13	.....	.....	.....
P_2O_5	.11	.03	.04	.06	.21	.11	.69	.49
SO_3	none	.06	.20	.10	.13	.....	.....	.....
S	.....	.03	.....	.03	.....	.01	.08	.09
Cl	.....	.08	.28	.12	.20	.23	.03	.29
F	.....	(?)	.....	trace	trace	none	.....	.06
V_2O_3	.....	.....	.....	.....	.....	.....	.04	.....
MnO	.19	.21	.26	.08	trace	.15	.18	.19
NiO	.....	.....	.....	none	.....	none	trace	.02
BaO	trace	.09	none	.08	.60	.04	.08	.10
SrO	.....	.04	none	.03	.16	trace	.08	.10
Li_2O	.....	trace	trace	trace	trace	trace	trace	trace
	99.74	99.97	100.07	99.86	100.42	99.82	99.97	99.93

NORMS.

	A.	B.	C.	D.	E.	F.	G.	H.
or	28.9	30.6	31.1	33.9	55.6	29.5	16.7	22.2
ab	33.5	39.3	38.3	22.0	5.8	23.6	23.6	14.1
an	.....	.....	.....	.....	.....	.....	8.3	3.1
ne	23.3	19.0	17.2	32.7	9.9	30.4	18.7	29.0
so	.....	.....	3.9	.....	2.9	.....	.....	.....
ac	2.8	4.2	4.6	.6	13.8	7.4	.....	.....
di	1.5	.....	2.6	2.9	8.0	4.9	15.9	18.6
ol	.....	.....	.....	.....	.....	.....	3.7	.8
wo	.6	1.9	.....	1.5	1.0	.6	.....	.....
mt	2.1	1.2	.....	.....	.....	.....	3.9	4.9
il	.8	.....	.....	.....	1.2	.8	3.7	3.4
ap	.....	.....	.....	.....	.....	.....	1.7	1.1

The following table contains analyses of deep-seated rocks of the nephelite series:

Analyses of deep-seated nephelite rocks.

A. Elæolite syenite, or litchfieldite, Litchfield, Maine. Analysis by L. G. Eakins. Described by W. S. Bayley. Contains elæolite, two feldspars, and lepidomelane, with accessory sodalite, cancrinite, and zircon. Magmatic symbol, I.5.1.4. *Nordmarkose.*

B. Elæolite syenite, Beemersville, New Jersey. Analysis by Eakins. Described by J. P. Iddings. Contains nephelite, orthoclase, ægirite, and biotite, with less melanite, titanite, apatite, magnetite, and zircon. Symbol, I.5.6.3. *Beemerose.*

C. Nephelite syenite, Brookville, New Jersey. Analysis by G. Steiger. Described by F. L. Ransome. Contains alkali feldspars, altered nephelite, amphibole, biotite, cancrinite, plagioclase, muscovite, ægirine-augite, apatite, fluorite, and traces of magnetite, with secondary analcite, sericite, and natrolite (?). Symbol, 1.6.2.4. *Viezzenose.*

D. Elæolite syenite, Red Hill, Moultonboro, New Hampshire. Analysis by W. F. Hillebrand; description by Bayley. Contains elæolite, hornblende, augite, biotite, sodalite, albite, and orthoclase, with accessory apatite, sphene, magnetite, and an occasional zircon. Symbol, II.5.1.4. *Umptekose.*

E. Nephelite syenite, Cripple Creek, Colorado. Analysis by Hillebrand. Described by W. Cross. Contains alkali feldspars, nephelite, sodalite, augite, some ægirine, hornblende, biotite, sphene, apatite, and magnetite. Symbol, II.5.2.4. *Akerose.*

F. Urtite, Kola Peninsula, Finland. Analysis by N. Sahlbom. Described by W. Ramsay, Geol. Fören. Förhandl., vol. 18, p. 463, 1896. Contains, in percentages, nephelite, 85.7; pyroxene, mostly ægirite, 12.0; and apatite, 2.0. Symbol, II.9.1.4. *Urtose.*

G. Ijolite, Iivaara, Finland. Analysis by A. Zilliacus. Described by W. Hackman, Bull. Comm. géol. Finland, No, 11. 1900. Contains, in average percentages, nephelite, 51.6; pyroxene, 39.2; apatite, 4.3; titanite, 2.1; and ivaarite, 0.7. Symbol, II.9.1.4. *Urtose.*

H. Theralite, Crazy Mountains, Montana. Analysis by Hillebrand. Contains, according to J. E. Wolff, augite, ægirite, biotite, sodalite, nephelite, feldspar, apatite, magnetite, and titanite. Symbol, III.7.1.4. *Malignose.*

	A.	B.	C.	D.	E.	F.	G.	H.
SiO_2	60.39	53.56	54.68	59.01	54.34	45.28	43.02	44.65
Al_2O_3	22.57	24.43	21.63	18,18	19.21	27.37	24.63	13.87
Fe_2O_3	.42	2.19	2.22	1.63	3.19	3.53	3.59	6.06
FeO	2.26	1.22	2.00	3,65	2.11	.49	2.17	2.94
MgO	.13	.31	1.25	1.05	1.28	.33	1.96	5.15
CaO	.32	1.24	2.86	2.40	4.53	1.22	5.47	9.57
Na_2O	8.44	6.48	7.03	7.03	6.38	17.29	14.81	5.67
K_2O	4.77	9.50	4.58	5.34	5.14	3.51	2.99	4.49
H_2O-	} .57	} .93	.27	.15	.14	} .40	.....	.96
H_2O+			1.88	.50	1.17		.....	2.10
TiO_2	.....	.....	.79	.81	1.09	.....	.63	.95
ZrO_2	.....	.....	.....	.....	.07	.....	.....	.....
CO_2	.....	.....	none	.12	none	.....	.....	.11
P_2O_5	.....	.....	.28	trace	.27	.....	.70	1.50
SO_3	.....	.....	.07	.....	.07	.....	.....	.61
F	.....	.....	.22	.....	.....	.....	.....	.....
Cl	.....	.....	.....	.....	.28	.....	.....	trace
MnO	.08	.10	trace	.03	.08	.19	.....	.17
BaO	.....	.....	.05	.08	.24	.....	.....	.76
SrO	.....	.....	.....	trace	.16	.....	.....	.37
V_2O_3	.....	.....	.....	.....	.02	.....	.....	.....
Li_2O	.....	.....	.....	trace	trace	.....	.....	trace
	99.95	99.96	99.81	99.98	99.77	99.61	99.97	99.93

NORMS.

	A.	B.	C.	D.	E.	F.	G.	H.
or	28.4	56.2	27.2	31.7	30.6	.....	.....	26.7
ab	52.4	3.4	35.6	41.9	34.1	.....	.....	2.6
an	1.7	6.1	14.2	2.2	9.2	.....	.....	1.1
lc	.....	.....	.....	.....	.....	16.1	9.6	.....
ne	10.2	27.5	12.8	9.9	6.0	65.0	59.4	18.5
kp	.....	.....	.....	.....	.....	.....	3.2	.....
so	.....	.....	.....	.....	3.9	.....	.....	.....
no	.....	.....	.....	.....	.....	.....	.....	5.0
C	2.9	1.3	.....	.....	.....	.....	.....	.....
ac	.....	.....	.....	.....	.....	10.2	10.2	.....
ns	.....	.....	.....	.....	.....	3.4	1.0	.....
di	.....	.....	.....	8.2	6.9	3.4	.....	27.9
wo	.....	.....	.....	.....	1.3	8	.....	.2
ol	3.1	.9	2.6	1.9	.....	.....	5.8	.....
am	.....	.....	.....	.....	.....	.....	8.2	.....
mt	.7	3.2	3.2	2.3	4.6	.....	1.1	6.6
hm	.....	.....	.....	.....	.....	.....	.....	1.4
il	.....	.....	1.5	1.5	2.0	.....	.....	1.8
ap	.....	.....	.....	.....	.7	.....	1.7	3.5

A comparison of these norms with the modes indicated in the descriptions of the rocks shows great divergencies. The normative and actual minerals are only in part the same. All of the rocks, however, consist dominantly of alkali feldspar and nephelite, with varying accessories. In the Brookville syenite the normative anorthite shows a gradation toward the plagioclase rocks. The urtite and ijolite represent the highest proportions of nephelite; and in the theralite we have the femic minerals forming nearly one-half of the rock. Taken all together, the nephelite rocks, eruptive and plutonic, range from I.5.1.4 to III.7.1.4. The mineralogical variations are great enough

to justify a much more minute subdivision in classification than they are given here. The many varietal names that have been given the nepheline syenites follow from a recognition of their differences. Ditroite, foyaite, laurdalite, litchfieldite, urtite, and ijolite are examples of this varied nomenclature.[a]

LEUCITE ROCKS.

The leucite-bearing rocks are much less common than those carrying nephelite, and, like the latter, have been designated by various names. The following examples among those containing little or no soda-lime feldspar will suffice to show their composition:

Analyses of leucite rocks.

A. Pseudoleucite-sodalite tinguaite, Bearpaw Mountains, Montana. Analysis by H. N. Stokes. Described by W. H. Weed and L. V. Pirsson. Contains orthoclase, nephelite, sodalite, noselite, ægirite, diopside, and fluorite. Magmatic symbol, II.7.1.3. *Janeirose.* Although leucite is not reported here, it appears abundantly in the norm.

B. Arkite, or leucite syenite, Magnet Cove, Arkansas. Described and analyzed by H. S. Washington, Jour. Geol., vol. 9, p. 616, 1901. Contains, in percentages, orthoclase, 3.9; leucite, 36.9; nephelite, 25.5; ægirite, 8.4; diopside, 10.8; garnet, 14.5. Symbol, II.9.1.3. *Arkansose.*

C. Wyomingite, Boar's Tusk, Leucite Hills, Wyoming. Analysis by W. F. Hillebrand. Described by W. Cross. Contains phlogopite, leucite, diopside, and apatite. Symbol, III.6.1.1. *Wyomingose.*

D. Leucitite, Bearpaw Mountains, Montana. Analysis by Stokes. Described by Weed and Pirsson as an olivine-free leucite basalt. Contains leucite, augite, iron oxides, rarely biotite, and a little glassy base. Symbol, III.8.1.2. *Chotose.*

E. Leucitite, Alban Hills, Italy. Described and analyzed by Washington, Am. Jour. Sci., 4th ser., vol. 9, p. 53, 1900. Contains leucite, nephelite, melilite, diopside, magnetite, a trace of biotite, and scarcely any apatite. Symbol, III.8.2.2. *Albanose.*

F. Madupite, Leucite Hills, Wyoming. Analysis by Hillebrand. Described by Cross. Contains diopside and phlogopite, with perofskite and magnetite, in a glassy base of nearly the composition of leucite. Symbol, III.9.1.2. *Madupose.*

G. Missourite, Highwood Mountains, Montana. Analyzed by E. B. Hurlbut. Described by Weed and Pirsson in Bull. U. S. Geol. Survey No. 237, 1905. Contains leucite, augite, biotite, olivine, apatite, iron ore, some zeolites, and analcite. Symbol, IV.1.1.2. In this rock, as the symbol indicates, femic minerals are dominant.

---

[a] A very full description of the Norwegian nepheline syenites is given by W. C. Brögger in his work Die Eruptivgesteine des Kristianiagebietes, especially in part 3 (1898). Laurdalite, heumite, nepheline porphyry, foyaite, and hedrumite are the nephelite rocks described in this memoir. A remarkable rock, found in Dungannon Township, Ontario, has been described by F. D. Adams, Am. Jour. Sci., 4th ser., vol. 17, p. 269, 1904. It contains 72.2 per cent of nephelite, with 15.09 of hornblende and 5.14 of cancrinite. Some minor constituents are also present. This rock Adams has named monmouthite and its norm differs widely from its mode.

	A.	B.	C.	D.	E.	F.	G.
SiO_2	51.93	44.40	50.23	46.51	45.99	42.65	46.06
Al_2O_3	20.29	19.95	11.22	11.86	17.12	9.14	10.01
Fe_2O_3	3.59	5.15	3.34	7.59	4.17	5.13	3.17
FeO	1.20	2.77	1.84	4.39	5.38	1.07	5.61
MgO	.22	1.75	7.09	4.73	5.30	10.89	14.74
CaO	1.65	8.49	5.99	7.41	10.47	12.36	10.55
Na_2O	8.49	6.50	1.37	2.39	2.18	.90	1.31
K_2O	9.81	8.14	9.81	8.71	8.97	7.99	5.14
H_2O-	.10	.24	.93	1.10	.....	2.04	1.44
H_2O+	.99	1.17	1.72	2.45	.45	2.18	
TiO	.20	1.53	2.27	.83	.37	1.64	.73
ZrO_2	.....	.03	.....	.....	.....	.....	.....
CO_2	.25	.12	.....	none	.....	.....	.....
P_2O_5	.06	.37	1.89	.80	.....	1.52	.21
SO_3	.67	.06	.74	.05	.....	.58	.05
Cl	70	.....	.03	.04	.....	.03	.03
F	.27	.....	.50	trace	.....	.47	.....
Cr_2O_3	.....	.....	.10	none	.....	.07	.....
Di_2O_3	.....	.....	.03	.....	.....	.11	.....
MnO	trace	.08	.05	.22	trace	.12	trace
NiO	.....	.....	.....	.04	.....	.....	.....
BaO	.09	.01	1.23	.50	.25	.89	.32
SrO	.07	.....	.24	.16	none	.33	.20
Li_2O	trace	.....	trace	trace	.....	trace	.....
	100.58	100.76	100.62	99.78	100.65	100.11	99.57

NORMS.

	A.	B.	C.	D.	E.	F.	G.
or	33.9	.....	44.5	7.8	.....	.....	1.1
an	.....	1.1	.....	.....	10.6	.....	6.1
lc	18.7	37.9	10.5	34.0	41.4	37.1	23.1
ne	.....	29.8	1.7	10.8	9.9	.....	6.0
so	9.8	.....	.....	.....	.....	.....	.....
no	5.3	.....	.....	.....	.....	3.5	.....
ac	10.2	.....	7.4	6.9	.....	.....	.....
di	5.7	9.6	13.9	25.1	12.0	22.6	37.4
wo	.....	12.0	.....	.....	.....	.....	.....
ol	.....	.....	7.9	2.5	9.7	11.7	17.7
am	.....	.....	.....	.....	9.7	8.2	.....
mt	.....	4.9	.....	7.4	6.0	.....	4.6
hm	.....	1.8	.8	.....	.....	5.1	.....
il	.5	2.8	4.1	1.5	.8	2.7	1.2
ap	.....	.....	4.5	1.9	.....	3.7	.....
ft	.7	.....	.....	.....	.....	7	.....

It is worthy of note that there are many rocks specifically designated as leucite-bearing which, as interpreted by Washington, reveal no leucite in the norms.[a] It is also to be observed that the leucite rocks are all effusive and never deep seated; at least no plutonic member of the group is known. In an abyssal rock, which has consolidated under pressure, water is retained; and in such cases, when magnesium and potassium available for the formation of olivine and leucite are present, biotite is produced instead. Under ordinary circumstances the fusion of biotite yields olivine, leucite, some glass, and a little spinel.[b] By fusing biotite and microcline together, Fouqué and Lévy[c] obtained a mixture of leucite, olivine, and mag-

[a] On the formation of leucite in igneous rocks, see H. S. Washington, Jour. Geol., vol. 15, pp. 257, 357, 1907. Also in his Roman Comagmatic Region, Pub. No. 51 of the Carnegie Institution, Washington, 1906.

[b] See H. Bäckström, Geol. Fören. Förhandl., vol. 18, p. 155, 1896.

[c] Synthèse des minéraux et des roches, p. 77.

netite, together with a mineral resembling melilite, which, however, could not be that species. A magma, then, which would form biotite under pressure, will lose water if it solidifies at the surface of the earth, and may generate olivine and leucite.

The other lenad minerals, sodalite, noselite, and haüynite, are also noteworthy constituents of certain rare rocks, which we need not consider in detail. Sodalite syenite, haüynophyre, and nosean sanidinite are names of rocks in which these minerals are conspicuous.[a]

One sodalite syenite, however, is included in the next table of analyses, for the reason that it also contains analcite, a rock-making mineral whose significance has been realized only within recent years.

ANALCITE ROCKS.

The occurrence of analcite as a primary mineral was first recognized by W. Lindgren,[b] who described certain rocks from Montana as analcite basalts. In them the analcite played a part like that usually taken by the feldspars. Since then the mineral has been identified in a considerable number of other rocks,[c] and W. Cross[d] has found it to be commonly present in the phonolites of Cripple Creek. According to L. V. Pirsson,[e] the supposed "glass base" of monchiquite is really analcite. This rock was originally described by M. Hunter and H. Rosenbusch[f] as consisting of olivine, with either amphibole, pyroxene, or biotite, or all three, in a glassy groundmass; but the composition of the latter is that of analcite, and like analcite it gelatinizes with weak acids. In a magma having the general composition of a nepheline rock, the presence or absence of water is an important factor. If water is retained, analcite is likely to be formed; if lost, then nepheline is generated. Analcite, however, is more nearly akin, structurally, to leucite than to nephelite, and between the leucite and analcite rocks there are strong resemblances. The following analyses represent the last-named rock family:

Analyses of analcite rocks.

A. Sodalite syenite, Square Butte, Highwood Mountains, Montana. Analysis by W. H. Melville. Described by W. Lindgren, Am. Jour. Sci., 3d ser., vol. 45, p. 286, 1893. Contains, in percentages, orthoclase, 50; albite, 16; hornblende, 23; sodalite, 8; analcite, 3. Magmatic symbol I.5.2.3. *Pulaskose.*

B. Analcite tinguaite, Manchester, Massachusetts. Analyzed and described by H. S. Washington, Am. Jour. Sci., 4th ser., vol. 6, p. 182, 1808. Contains, in percentages, analcite, 37.4; albite, 20.9; nephelite, 10.9; orthoclase, 17.3; ægirite, 10.2; pyroxene, 3.3. Symbol I.6.1.4. *Miaskose.*

---

[a] For analyses see Washington's Tables, Prof. Paper U. S. Geol. Survey No. 14, pp. 201, 215, 303, 305, 349, 351, 1903.

[b] Proc. California Acad. Sci., 2d ser., vol. 3, p. 51, 1891.

[c] See citations under analcite in Chapter X, *ante*, p. 306.

[d] Sixteenth Ann. Rept. U. S. Geol. Survey, pt. 2, p. 32, 1896.

[e] *Jour. Geol.*, vol. 4, p. 679, 1896.

[f] *Min. pet. Mitth.*, vol. 11, p. 454, 1890.

C. Heronite, Heron Bay, Lake Superior. Analysis by H. W. Charlton. Described by A. P. Coleman, Jour. Geol., vol. 7, p. 431, 1899. Contains, in percentages, analcite, 47.0; orthoclase, 28.24; labradorite, 13.0; ægirite, 4.04; limonite, 3.59; calcite, 1.96. Symbol, I.6.1.4. *Miaskose.*

D. Monchiquite, Little Belt Mountains, Montana. Analysis by H. N. Stokes. Described by W. H. Weed and L. V. Pirsson. Contains olivine, augite, biotite, analcite, and apatite, with traces of serpentine and chlorite. Symbol, III.6.1.4. No subrang name assigned. Called analcite basalt in Washington's tables.

E. Monchiquite, Cabo Frio, Brazil. Described by Hunter and Rosenbusch, Min. pet. Mitth., vol. 11, p. 445, 1890. Analysis by M. Hunter. The type of monchiquite, as described above. Symbol, III.6.2.4. *Monchiquose.*

F. Monchiquite, Big Baldy, Little Belt Mountains, Montana. Analysis by W. F. Hillebrand. Described by Weed and Pirsson. Contains pyroxene, a few serpentinized olivines, iron ore, and apatite, in a base of analcite. Symbol, III.6.2.4. *Monchiquose.*

G. Monchiquite, Highwood Mountains, Montana. Analysis by H. W. Foote. Described by Weed and Pirsson. Contains augite, olivine, biotite, iron ore, apatite, and analcite, with some serpentine and a little kaolin. Symbol, III.6.2.4. *Monchiquose.*

H. Analcite basalt, near Cripple Creek, Colorado. Analysis by Hillebrand. Described by W. Cross. Contains augite, olivine, analcite, alkali feldspars, biotite, and apatite. Symbol, III.6.2.4. *Monchiquose.*

	A.	B.	C.	D.	E.	F.	G.	H.
SiO_2	56.45	56.75	52.73	48.39	46.48	48.35	47.82	45.59
Al_2O_3	20.08	20.69	20.05	11.64	16.16	13.27	13.56	12.98
Fe_2O_3	1.31	3.52	3.43	4.09	6.17	4.38	4.73	4.97
FeO	4.39	.59	.99	3.57	6.09	3.23	4.54	4.70
MgO	.63	.11	.17	12.55	4.02	8.36	7.49	8.36
CaO	2.14	.37	3.35	7.64	7.35	9.94	8.91	11.09
Na_2O	5.61	11.45	7.94	4.14	5.85	3.35	4.37	4.53
K_2O	7.13	2.90	4.77	3.24	3.08	3.01	3.23	1.04
H_2O-	.26	.04	.69	.28	4.27	.90	3.37	.51
H_2O+	1.51	3.18	4.85	2.56		2.89		3.40
TiO_2	.29	.30	.....	.73	.99	.52	.67	1.32
ZrO_2	.....	.....	.....	.....	.....	.....	.....	.03
CO_2	.....	.....	.93	.....	.45	.30	.....	.....
P_2O_5	.13	.....	trace	.45	.....	.40	1.10	.91
SO_3	.....	trace	.....	.08	.....	.....	trace	.....
Cl	.43	.28	.....	trace	.....	.....	.04	.05
F	.....	.....	.....	.....	.....	.25	.....	.....
Cr_2O_3	.....	.....	.....	.07	.....	trace	.....	.....
MnO	.09	trace	.....	trace	.....	.19	trace	.14
NiO	trace	.....	.....	.....	.....	.04	.....	.....
BaO	.....	none	.11	.32	.....	.54	.16	.13
SrO	.....	.....	.....	.15	.....	.09	.21	.12
Li_2O	.....	.....	.....	trace	.....	trace	.....	.....
	100.45	100.18	100.01	99.90	100.91	100.01	100.20	99.87

NORMS.

	A.	B.	C.	D.	E.	F.	G.	H.
or	41.7	17.2	28.4	18.9	18.3	17.8	18.9	6.1
ab	28.3	46.6	30.9	14.7	14.1	14.7	17.8	18.9
an	10.6	.....	5.0	3.6	8.6	12.2	7.8	12.2
ne	3.4	23.6	19.6	11.1	19.0	7.4	10.5	10.2
so	5.9	.....	.....	.....	.....	.....	.....	.....
ac	.....	6.0	.....	.....	.....	.....	.....	.....
di	.....	.5	1.0	24.4	22.3	27.2	23.9	30.0
wo	.....	.5	.....	.....	.....	.....	.....	.....
ol	6.1	.....	4.4	15.2	2.9	6.7	7.4	6.5
mt	1.9	2.0	3.2	5.8	9.0	7.2	8.0	7.2
hm	.....	.....	1.1	.....	.....	.....	.....	.....
il	.6	.....	.....	1.4	1.8	.9	1.2	2.5
ap	.....	.....	.....	1.1	.....	1.0	2.5	1.9

In these norms analcite is represented by normative nephelite; and biotite, in part, by olivine. The anorthite in some of them indicates a shading toward the plagioclase rocks.

THE MONZONITE GROUP.

The rhyolite-granite series of rocks, and the trachyte-syenite series also, are defined by the predominance in them of alkali feldspars, and commonly of orthoclase. The andesite-diorite series, on the other hand, is characterized by plagioclase feldspars; but between these rocks and those already described there are all sorts of gradations. Between the orthoclase and plagioclase rocks, therefore, considerations of convenience have led to the formation of an intermediate group, whose granitoid members are known as monzonites. Quartz monzonite corresponds to granite, monzonite to syenite, and so on. The effusive equivalents, intermediate between trachyte and andesite, have been named latites. All of these rocks carry orthoclase or anorthoclase with plagioclase in approximately equal amounts, with or without quartz, and with smaller amounts of the ferromagnesian silicates. The next table of analyses represents members of this intermediate group.

Analyses of monzonites and latites.

A. Quartz monzonite, Hailey, Idaho. Analysis by W. F. Hillebrand. Described by W. Lindgren. Contains quartz, orthoclase, microline, oligoclase, biotite, apatite, titanite, and magnetite. Magmatic symbol, I.4.2.3. *Toscanose.*

B. Quartz monzonite, Telluride quadrangle, Colorado. Analysis by H. N. Stokes. Described by W. Cross. Contains orthoclase and plagioclase in nearly equal amounts, quartz, augite, hornblende, biotite, magnetite, and apatite. Symbol, I.4.2.3. *Toscanose.*

C. Biotite-augite latite, near Clover Meadow, Tuolumne County, California. Analysis by Hillebrand. Described by F. L. Ransome. Contains plagioclase, biotite, augite, magnetite, apatite, and glass. Symbol, I.4.2.3. *Toscanose.*

D. Monzonite, Tintic district, Utah. Analysis by Stokes. Described by G. W. Tower and G. O. Smith. Contains orthoclase, plagioclase, quartz, hornblende, biotite, magnetite, apatite, zircon, and titanite, with a little chlorite and epidote. Symbol, II.4.3.3. *Harzose.*

E. Monzonite (yogoite), Yogo Peak, Little Belt Mountains, Montana. Analysis by Hillebrand. Described by W. H. Weed and L. V. Pirsson. Contains orthoclase, oligoclase, pyroxene, hornblende, biotite, apatite, titanite, iron ore, and a little kaolin. Symbol, II.5.2.3. *Monzonose.*

F. Augite latite, Dardanelle flow, Tuolumne County, California. Analysis by Stokes. Described by Ransome. Contains plagioclase, augite, iron ore, some olivine, apatite, and brown glass. Symbol, II.5.2.3. *Monzonose.*

G. Augite latite, Table Mountain, Tuolumne County, California. Analysis by Hillebrand. Described by Ransome. Contains labradorite, olivine, augite, and magnetite. Symbol, II.5.3.3. *Shoshonose.*

H. Monzonite, La Plata Mountains, Colorado. Analysis by Stokes. Described by Cross. Contains orthoclase and plagioclase in nearly equal amounts, augite, hornblende, quartz, titanite, magnetite, and apatite. Symbol, II.5.3.4. *Andose.*

	A.	B.	C.	D.	E.	F.	G.	H.
SiO_2	68.42	65.70	62.33	59.76	54.42	59.43	56.19	57.42
Al_2O_3	15.01	15.31	17.30	15.77	14.28	16.68	16.76	18.48
Fe_2O_3	.97	2.54	3.00	3.77	3.32	2.54	3.05	3.74
FeO	1.93	1.62	1.63	3.30	4.13	3.48	4.18	2.10
MgO	1.21	1.62	1.05	2.16	6.12	1.84	3.79	1.71
CaO	2.60	2.56	3.23	3.88	7.72	4.09	6.53	6.84
Na_2O	3.23	3.62	4.21	3.01	3.44	3.72	2.53	4.52
K_2O	4.25	4.62	4.46	4.40	4.22	5.04	4.46	3.71
H_2O-	.54	.17	.44	.31	.22	.27	.34	.08
H_2O+	.73	.42	.75	1.11	.38	.72	.66	.28
TiO_2	.50	.72	1.05	.87	.80	1.38	.69	.86
ZrO_2	.....	.....	.04	.....	.....	.08	.....	.....
CO_2	.20	none	.....	.78	.....	.....	.....	none
P_2O_5	.13	.33	.29	.42	.59	.58	.55	.36
S	.02	.....	.....	none	.....	.....	.....	.....
SO_3	.....	.12	.....	none	.....	.....	.....	none
Cl	.....	.03	.....	.04	.....	.05	.....	.03
V_2O_3	.....	.....	.01	.02	.....	.....	.....	.....
MnO	.06	trace	.08	.12	.10	trace	.10	.09
BaO	.12	.12	.24	.09	.32	.14	.19	.15
SrO	.03	.03	.05	trace	.13	trace	trace	.08
Li_2O	.....	trace	trace	trace	trace	none	trace	trace
FeS_2	.....	.....	.06	.....	.....	.....	.....	.....
C	.....	.....	.11	.....	.....	.....	.....	.....
	99.95	99.53	100.33	99.81	100.19	100.04	100.02	100.45

NORMS.

	A.	B.	C.	D.	E.	F.	G.	H.
Q	25.1	19.1	12.4	14.6	.....	8.4	5.9	4.0
or	25.6	27.2	26.7	26.1	25.0	29.0	26.7	21.7
ab	26.7	30.4	35.6	24.1	28.8	30.9	21.5	37.7
an	13.1	12.1	15.0	16.7	11.1	13.9	20.9	20.0
C	.3	.4	.....	.....	.....	.....	.....	.....
di	.....	.....	.8	2.4	19.1	2.3	6.8	8.7
hy	5.0	4.1	2.3	5.8	9.9	5.8	10.1	.....
mt	1.4	3.5	2.1	5.6	2.6	3.5	4.6	5.3
hm	.....	.....	1.6	.....	.....	.....	.....	.....
il	.9	1.4	2.0	1.7	1.5	2.6	1.2	1.5
ap	.....	.....	.....	.....	1.3	1.4	1.2	1.0

THE ANDESITE-DIORITE SERIES.

From the monzonite group to the dacites and quartz diorites the gradation is very slight. These rocks, which mark the persilicic end of the andesite-diorite series, are characterized by quartz, with plagioclase as the prevailing feldspar, and with subordinate amounts of femic minerals. The dacites are eruptive rocks; the quartz diorites are their granitoid or plutonic equivalents. They correspond to rhyolite and granite in the orthoclase series, and between dacite and quartz diorite there are porphyritic forms analogous to the quartz porphyries. For dacites and quartz diorites a single group of analyses must suffice, as follows:

Analyses of dacites and quartz diorites.

A. Dacite, Bear Creek Falls, Shasta County, California. Analysis by R. B. Riggs. **Described by J. S. Diller.** Contains plagioclase, with a little sanidine, hornblende, quartz, **magnetite, some pyroxene** inclusions, and glass. Magmatic symbol, I.4.2.4. *Lassenose.*

B. Quartz diorite, near Enterprise, Butte County, California. Analysis by W. F. Hillebrand. **Reported by H. W. Turner to contain plagioclase, potash feldspar, quartz, hornblende, mica, and accessories.** Symbol, I.4.2.4. *Lassenose.*

C. Dacite, Sepulcher Mountain, Yellowstone National Park. Analysis by J. E. Whitfield. Described by J. P. Iddings. Contains plagioclase, quartz, biotite, and hornblende. Symbol, I.4.3.4. *Yellowstonose.*

D. Quartz diorite, Pigeon Point, Minnesota. Analysis by Hillebrand. Described by W. S. Bayley. Contains feldspar, quartz, hornblende, chlorite, magnetite, apatite, and rutile. Symbol, II.4.2.3. *Adamellose.*

E. Quartz-mica diorite, near Milton, Sierra County, California. Analysis by Hillebrand. Described by Turner. Contains plagioclase, quartz, hornblende, brown mica, iron ore, and apatite. *Harzose.*

F. Quartz-mica diorite, Electric Peak, Yellowstone National Park. Analysis by Whitfield. Described by Iddings. Contains plagioclase, orthoclase, quartz, biotite, hornblende, augite, and hypersthene. Symbol, II.4.3.4. *Tonalose.*

G. Quartz-mica diorite, Yaqui Creek, Mariposa County, California. Analysis by G. Steiger. Described by Turner. Contains plagioclase, quartz, biotite, hornblende, a little pyroxene, iron ore, and apatite. Symbol, II.4.3.4. *Tonalose.*

H. Quartz-mica-hornblende diorite, Stone Run, Cecil County, Maryland. Analysis by Hillebrand. Described by A. G. Leonard. Contains hornblende, biotite, quartz, plagioclase, a little orthoclase, zircon, apatite, titanite, and magnetite, with secondary chlorite and epidote. Symbol, II.4.4.3. *Bandose.*

	A.	B.	C.	D.	E.	F.	G.	H.
SiO_2	68.10	70.36	65.66	57.98	57.26	65.11	58.09	58.57
Al_2O_3	15.50	15.47	15.61	13.58	6.51	16.21	17.46	16.10
Fe_2O_3	3.20	.98	2.10	3.11	3.27	1.06	1.12	2.89
FeO	none	1.17	2.07	8.68	5.19	3.19	5.08	6.12
MgO	.10	.87	2.46	2.87	3.41	2.57	4.06	2.33
CaO	3.02	3.18	3.64	2.01	6.69	3.97	6.24	7.39
Na_2O	4.20	4.91	3.65	3.56	2.65	4.00	2.94	2.11
K_2O	3.13	1.71	2.03	3.44	2.93	2.51	2.02	1.01
H_2O-	.....	.06	} 1.07	} 2.47	.20	} .94	.29	.21
H_2O+	2.72	1.00			.95		1.45	1.27
TiO_2	.15	.20	1.37	1.75	.53	.71	.95	1.41
ZrO_2	.....	.....	.....	.....	.....	.....	.....	.09
CO_2	.....	.....	.....	.....	.....	.....	.21	none
P_2O_5	.03	.11	trace	.29	.30	.02	.17	.37
SO_3	.....	.....	.13	.....	.....	trace	.05	.....
Cl	.....	.....	.12	trace	.....	none	.02	.....
V_2O_3	.....	.....	.....	.....	.....	.....	.....	.02
MnO	trace	trace	none	.13	.18	none	none	.18
BaO	.06	.06	.....	.04	.10	.....	.07	trace
SrO	trace	trace	.....	trace	.06	.....	.04	trace
Li_2O	none	trace	.36	trace	trace	.04	none	trace
C	.....	.....	.....	.....	.....	.....	.11	.....
	100.21	100.08	100.27	99.91	100.23	100.33	100.37	100.07

NORMS.

	A.	B.	C.	D.	E.	F.	G.	H.
Q	25.4	27.1	25.0	11.1	10.3	18.5	11.2	21.3
or	18.3	10.0	12.2	20.0	17.2	15.0	12.2	6.1
ab	35.6	41.4	30.9	29.9	22.5	33.5	24.6	17.8
an	14.2	15.3	18.1	10.0	24.5	18.9	28.4	31.4
C	.....	.....	.7	.5	.....	.....	.....	.....
di	.....	.....	.....	.....	7.3	.8	2.1	4.5
hy	.7	3.1	6.2	17.7	10.9	9.7	16.0	10.0
mt	.....	1.6	2.8	8.0	4.6	1.6	1.6	4.2
hm	3.2	.....	.....	.....	.....	.....	.....	.....
il	.....	.5	2.6	3.4	1.1	1.4	1.8	2.8
tn	.4	.....	.....	.....	.....	.....	.....	.....

With these rocks it must be borne in mind that normative orthoclase in part represents biotite. The actual orthoclase, therefore, will be less in amount than appears in the norms.

Dacite is a quartz andesite; and the andesites which are poor or *lacking* in quartz form a group of rocks parallel with the trachytes.

They contain plagioclase as a principal constituent, with subordinate biotite, hornblende, or pyroxene. Six analyses of andesites are given in the next table.

Analyses of andesites.

A. From Pikes Peak, Colorado. Analysis by W. F. Hillebrand. According to W. Cross, it contains plagioclase, orthoclase (?), augite, iddingsite, hypersthene, flakes of limonite, and a little tridymite. Magmatic symbol, I.5.2.3. *Pulaskose.*

B. From Silver Cliff, Colorado. Analysis by L. G. Eakins. Described by Cross. Contains plagioclase, orthoclase, augite, biotite, hornblende, quartz, magnetite, and apatite. Symbol, II.5.2.4. *Akerose.*

C. Augite andesite, Dike Mountain, Yellowstone National Park. Analysis by Hillebrand. According to Arnold Hague and T. A. Jaggar it contains plagioclase, augite, apatite, magnetite, and serpentinized olivine. Symbol, II.5.3.3. *Shoshonose.*

D. Augite-bronzite andesite, Unga Island Alaska. Analysis by Hillebrand. Described by G. F. Becker. Contains plagioclase, augite, bronzite, a little glass, and some indeterminate material. Symbol, II.5.3.4. *Andose.*

E. Hypersthene andesite, Franklin Hill, Plumas County, California. Analysis by Hillebrand. Reported by H. W. Turner to contain plagioclase, rhombic pyroxene, augite, and magnetite. Symbol, II.5.4.3. *Hessose.*

F. Augite andesite, near Electric Peak, Yellowstone National Park. Analysis by Hillebrand. Described by J. P. Iddings. Contains plagioclase, malacolite, actinolite, and magnetite. Symbol, III.5.3.3. *Kentallenose.*

	A.	B.	C.	D.	E.	F.
SiO_2	62.64	57.01	51.17	56.63	56.88	50.59
Al_2O_3	17.82	18.41	16.14	16.85	18.25	11.49
Fe_2O_3	3.91	3.69	4.11	3.62	2.35	1.83
FeO	.31	2.36	4.48	3.44	4.45	7.64
MgO	.47	2.34	4.82	4.23	4.07	11.27
CaO	3.22	4.29	7.72	7.53	7.53	8.79
Na_2O	4.47	4.95	2.99	3.08	3.29	2.27
K_2O	4.99	3.72	3.54	2.24	1.42	2.33
H_2O-	.58	2.29	.63	.80	.24	.21
H_2O+	.65		2.24	.51	.50	1.76
TiO_2	.59	.27	1.01	.67	.45	.80
ZrO_2	.08	.....	none	.....	.....	.....
P_2O_5	.25	.42	.48	.16	.30	.48
V_2O_3	.....	.....	.04	.04	.....	.04
MnO	.04	.21	.21	.23	.18	.17
NiO	.....	.....	.01	trace?	.....	.06
BaO	.28	.....	.20	.09	.11	.10
SrO	.07	.....	.10	trace	.04	.03
Li_2O	.....	.....	trace	trace	trace	trace
FeS_2	.....	.....	.05	.06	.....	.....
	100.37	99.96	99.94	100.18	100.06	99.86

NORMS.

	A.	B.	C.	D.	E.	F.
Q	10.2	2.2	.....	9.1	9.1	.....
or	30.0	22.2	20.6	13.3	8.3	13.8
ab	37.7	41.9	25.2	26.2	27.8	19.4
an	13.6	16.7	20.3	25.3	30.9	13.9
di	1.8	1.7	12.4	9.1	5.3	22.4
hy	.4	5.9	8.5	8.4	13.2	8.7
ol	.....	.....	.6	.....	.....	14.1
mt	.....	5.3	5.8	5.3	3.5	2.6
hm	3.9	.....	.....	.....	.....	.....
il	.6	.5	1.8	1.2	.8	1.5
ap	.....	1.0	1.1	.....	.....	1.0

Diorite is the plutonic equivalent of andesite. It is commonly defined as a granitoid rock consisting chiefly of plagioclase, with either biotite or hornblende, or both; but many diorites carry pyrox-

ene also, and shade into the gabbros. In fact, as the femic minerals become more prominent in rocks the problems of classification become more complex, and the results are less satisfactory than with the similar mixtures of feldspar and quartz. A variety of diorite is called "camptonite." Tonalite and kersantite are other varieties. The following analyses represent the diorite group:

Analyses of diorites.

A. Diorite, Mount Ascutney, Vermont. Analysis by W. F. Hillebrand. Described by R. A. Daly. Contains hornblende, augite, biotite, plagioclase, titaniferous magnetite, titanite, zircon, and quartz. Magmatic symbol, II.5.2.3. *Monzonose.*

B. Diorite porphyry, La Plata Mountains, Colorado. Analysis by Hillebrand. Described by W. Cross. Contains hornblende, plagioclase, orthoclase, quartz, titanite, apatite, and magnetite, with secondary epidote, chlorite, and calcite. Symbol, II.5.2.4. *Akerose.*

C. Diorite, Crazy Mountains, Montana. Analysis by Hillebrand. According to J. E. Wolff it contains biotite, labradorite, augite, orthoclase, quartz, magnetite, apatite, and hornblende. Symbol, II.5.3.3. *Shoshonose.*

D. Tonalite, South Leverett, Massachusetts. Analysis by L. G. Eakins. Described by B. K. Emerson. Contains feldspar, hornblende, and epidotic quartz veins. Symbol, II.5.3.4. *Andose.*

E. Diorite, South Honcut Creek, Butte County, California. Analysis by Hillebrand. Reported by H. W. Turner to contain feldspar, hornblende, and a little chlorite. Symbol, II.5.3.5. *Beerbachose.*

F. Camptonite, La Plata Mountains, Colorado. Analysis by Hillebrand. Reported by Cross to contain hornblende, augite, plagioclase, orthoclase, magnetite, apatite, and some secondary calcite. Symbol, III.5.3.3. *Kentallenose.*

G. Camptonite, Mount Ascutney, Vermont. Analysis by Hillebrand. Described by Daly. Contains plagioclase, hornblende, a little augite, olivine, magnetite, and apatite. Symbol, III.5.3.4. *Camptonose.*

H. Diorite, Hump Mountain, Mitchell County, North Carolina. Analysis by Hillebrand. Reported by A. Keith to contain plagioclase, orthoclase, hornblende, quartz, biotite, magnetite, and garnet. Symbol, III.5.4.3. *Auvergnose.*

	A.	B.	C.	D.	E.	F.	G.	H.
SiO_2	57.97	60.44	57.97	55.51	57.87	47.25	48.22	46.91
Al_2O_3	17.28	16.65	15.65	16.51	16.30	15.14	14.27	15.85
Fe_2O_3	2.23	2.31	.73	1.68	1.71	5.05	2.46	2.86
FeO	3.75	3.09	2.80	4.57	3.86	4.95	9.00	9.95
MgO	2.20	2.18	4.96	6.73	5.50	6.87	6.24	7.01
CaO	4.33	4.22	10.93	6.73	5.53	9.98	8.45	9.62
Na_2O	4.31	5.18	3.03	3.19	5.01	2.39	2.90	2.65
K_2O	4.12	2.71	3.16	2.46	.75	2.60	1.93	.69
H_2O-	.18	.36	.22	1.53	.26	.40	.28	.24
H_2O+	.57	1.07	.38		2.40	2.12	1.66	1.62
TiO_2	1.54	.60	.60	.91	.53	1.22	2.79	2.03
ZrO_2		.....	.....	.....	.....	.....	.03	none
CO_2	.05	.48	.....	.....	.....	1.87	.15	.....
P_2O_5	.64	.29	.15	.17	.27	.25	.64	.26
Cl	.....	.....	.....	.....	.....	.....	.10	.....
F	.04	.....	trace	.....	.....	.....	.05	.....
V_2O_3	.....	.02	.....	.....	.....	.05	.....	.03
Cr_2O_3	.....	.....	.....	.....	.....	.....	.....	.01
MnO	.15	.13	trace	.11	.08	.17	.20	.22
(NiCo)O	trace	none	.....	.....	.....	.02	.03	.03
BaO	.07?	.12	.09	.02	.05	.08	.04	trace?
SrO	.....	.11	.02	.....	trace	.05	.....	trace?
Li_2O	.....	trace	trace	.....	trace	trace	.....	trace
FeS_2	.32	.....	.....	.....	.....	none	.36	.....
	99.75	99.96	100.69	100.12	100.12	100.46	99.80	99.98

NORMS.

	A.	B.	C.	D.	E.	F.	G.	H.
Q	4.9	7.7	3.1	2.3	5.0	.....	.....	.....
or	24.5	16.1	18.9	14.5	4.4	15.0	11.1	3.9
ab	37.2	44.0	25.7	26.7	41.9	17.8	24.6	22.5
an	15.0	13.9	19.5	23.4	20.3	22.8	20.3	29.2
ne	.....	.....	.....	.....	.....	1.4	.....	.....
di	2.5	5.7	27.8	8.1	5.9	21.4	15.1	15.1
hy	6.9	5.5	2.7	18.4	16.5	.....	9.2	8.1
ol	.....	.....	.....	.....	.....	7.2	6.4	10.7
mt	3.2	3.2	1.2	2.6	2.3	7.4	3.5	4.2
il	2.9	1.2	1.1	1.7	1.1	2.3	5.4	3.8
ap	1.3	.....	.....	.....	.....	.....	1.3	.....

THE BASALTS.

The basalts form an ill-defined group of lavas which vary from the andesites in containing a larger proportion of the femic minerals. Plagioclase, pyroxene, often olivine, and magnetite are the principal minerals of basalt, but many variations of it are known. Some basalts are free from olivine, other examples contain such minerals as leucite, nephelite, melilite, etc. Hornblende basalts are known, but they are rare. In a few basalts quartz has been identified, but its presence is anomalous and not well explained.[a] The following analyses relate to basalt, as the unqualified term is commonly used.

Analyses of basalts.

A. Basalt, early flow, Table Mountain, Colorado. Analysis by L. G. Eakins. Described by W. Cross. Contains augite, olivine, plagioclase, probably orthoclase, magnetite, apatite, and a little biotite. Magmatic symbol, II.5.3.3. *Shoshonose.*

B. Basalt, Saddle Mountain, Pikes Peak, Colorado. Analysis by W. F. Hillebrand. Described by Cross. Contains augite, olivine, plagioclase, orthoclase, magnetite, biotite, and apatite. Symbol, II.5.3.4. *Andose.*

C. Quartz basalt, Cinder Cone, near Lassen Peak, California. Analysis by Hillebrand. Described by J. S. Diller. Contains plagioclase, pyroxene (mostly hypersthene), olivine, quartz, magnetite, augite sparingly, and much unindividualized base. Symbol, II.5.3.4. *Andose.*

D. Basalt, San Joaquin River, Madera County, California. Analysis by Hillebrand. Reported by H. W. Turner to contain pyroxene, partly augite, plagioclase, olivine, and iron ores. Symbol, II.5.3.4. *Andose.*

E. Basalt, McCloud River, near Mount Shasta, California. Analysis by H. N. Stokes. Not described. Symbol, II.5.4.3. *Hessose.*

F. Basalt, San Rafael flow, Colfax County, New Mexico. Analysis by Hillebrand. According to Cross it contains plagioclase, augite, olivine, much iddingsite, magnetite, and apatite. Symbol, III.5.3.4. *Camptonose.*

G. Basalt, Pine Hill, South Britain, Connecticut. Analysis by Hillebrand. Described by W. H. Hobbs. Contains plagioclase, augite, olivine, and magnetite. Symbol, III.5.4.3. *Auvergnose.*

[a] See J. S. Diller, Bull. U. S. Geol. Survey No. 79, 1891.

	A.	B.	C.	D.	E.	F.	G.
SiO_2	49.69	48.76	57.25	51.89	47.94	48.35	52.40
Al_2O_3	18.06	15.89	16.45	15.28	18.90	15.47	13.55
Fe_2O_3	2.64	6.04	1.67	3.10	2.21	4.80	2.73
FeO	6.19	4.56	4.72	3.60	8.59	7.58	9.79
MgO	5.73	5.98	6.74	8.68	8.21	8.15	5.53
CaO	8.24	8.15	7.65	7.38	9.86	8.81	10.01
Na_2O	2.99	3.43	3.00	3.27	2.81	3.09	2.32
K_2O	3.90	2.93	1.57	2.57	.29	.95	.40
H_2O-	.91	.40	.40	1.17	.39	.28	.62
H_2O+		1.48		1.37	.74	.73	1.05
TiO_2	.85	1.65	.60	.91	.57	1.33	1.08
P_2O_5	.81	.60	.20	.61	.15	.33	.12
SO_3						.07	
Cl	.13						
MnO	.13	.13	.10	.12	trace	.21	.26
NiO				.02		.02	trace
BaO		.17	.03	.15	none	.06	trace?
SrO		.06	trace	.09	none	.03	none
Li_2O			none	trace	trace	trace	none
FeS_2							.13
	100.27	100.23	100.38	100.21	100.66	100.26	99.99

NORMS.

	A.	B.	C.	D.	E.	F.	G.
Q			6.9				6.7
or	22.8	17.2	9.5	15.0	1.7	5.6	2.2
ab	19.4	26.7	25.2	27.8	23.6	26.2	19.4
an	24.5	19.2	26.7	22.2	38.1	25.6	25.6
ne	3.1	1.1					
di	9.4	14.1	9.0	9.0	8.9	14.7	19.7
hy			18.9	7.9	5.9	6.7	18.1
ol	12.8	6.5		7.2	17.0	10.5	
mt	3.7	8.6	2.3	4.6	3.2	7.0	3.9
il	1.7	3.1	1.1	1.7	1.1	2.5	2.2
ap	1.9	1.3		1.2			

The following table contains analyses of a number of exceptional rocks, which are classed with the basalts, but vary from them in having the feldspar more or less replaced by leucite, nephelite, or melilite. The unique venanzite is placed here, as being more nearly akin to this group of rocks than to any other. The analcite basalts given in a previous table properly belong here also, and so perhaps do some of the rocks described in connection with the tables on pages 373–379.

Analyses of basaltic rocks.

A. Kulaite, Kula, Lydia, Asia Minor. Described and analyzed by H. S. Washington. Jour. Geol., vol. 8, p. 613, 1900. Contains, in percentages, anorthite, 17.9; albite, 8.4; orthoclase, 23.4; nephelite, 20.4; diopside, 12.8; olivine, 10.7; magnetite, 3.8; apatite, 1.8. The diopside is derived from hornblende. Magmatic symbol, II.6.2.4. *Essexose.*

B. Leucite kulaite, Kula. Described and analyzed by Washington, loc. cit. Contains, in percentages, anorthite, 17.9; albite, 23.6; leucite, 17.4; nephelite, 12.8; diopside, 13.8; olivine, 9.5; magnetite, 3.7. Symbol, II.6.2.4. *Essexose.*

C. Basalt, Pinto Mountain, Uvalde County, Texas. Analysis by W. F. Hillebrand. Described by W. Cross. Contains olivine, augite, plagioclase, magnetite, apatite, and a very little alkali feldspar. Symbol, III.6.3.4. *Limburgose.*

D. Leucite basalt, Highwood Mountains, Montana. Analysis by H. W. Foote. Described by W. H. Weed and L. V. Pirsson. Contains augite, olivine, biotite, some leucite, analcite, iron ore, and apatite. Symbol, III.7.2.3. No subrang name given.

E. Venanzite or euctolite, San Venanzo, Umbria, Italy. Described by H. Rosenbusch. Sitzungsb. Akad. Berlin, 1899, pt. 1, p. 111. Contains olivine, melilite, leucite, biotite, magnetite, some zeolites, and a trace of nephelite. Symbols, IV,1^5.1.2. *Venanzose.*

F. Nephelite basalt, Tom Munn's Hill, Uvalde County, Texas. Analysis by Hillebrand. Described by Cross. Contains olivine, augite, nephelite, magnetite, and apatite. Symbol, IV.2³.1.2. *Uvaldose.*

G. Nephelite basalt, Black Mountain, Uvalde County, Texas. Analysis by Hillebrand. Described by Cross. Contains olivine, augite, nephelite, magnetite, and apatite. Symbol, IV.2³.1.2. *Uvaldose.*

H. Nephelite-melilite basalt, near Uvalde, Texas. Analysis by Hillebrand. Described by Cross. Contains nephelite, melilite, olivine, augite, apatite, and magnetite. Symbol, IV.2³.1.2. *Casselose.*

	A.	B.	C.	D.	E.	F.	G.	H.
SiO_2	48.35	49.90	45.11	46.04	41.43	40.32	39.92	37.96
Al_2O_3	19.94	19.89	12.44	12.23	9.80	9.46	8.60	10.14
Fe_2O_3	2.48	2.55	2.67	3.86	3.28	4.75	4.40	3.69
FeO	5.25	4.78	9.36	4.60	5.15	7.48	8.00	7.59
MgO	5.15	5.05	11.56	10.38	13.40	18.12	20.17	14.69
CaO	7.98	7.21	10.61	8.97	16.62	10.55	10.68	16.28
Na_2O	5.47	5.60	3.05	2.42	1.64	2.62	1.91	2.18
K_2O	3.99	3.74	1.01	5.77	7.40	1.10	1.03	.69
H_2O-	.16	.13	.16	2.87	1.11	.57	.43	.39
H_2O+	.22	.19	.78			1.25	1.45	1.82
TiO_2	.12	.93	2.34	.64	.29	2.66	2.70	2.93
P_2O_5	.84	trace	.51	1.14	none	.68	.51	1.13
S	.....	.....	.01	.....	.....	.01	trace	.04
SO_3	.....	.....	.....	trace	.....	.03	.....	.03
Cl	.....	.....	.11	.11	.....	.05	trace	trace
F	.....	.....	undet.	.....	.....	.04	.07	.07
V_2O_3	.....	.....	.04	.....	.....	.....	.04	.05
Cr_2O_3	.....	.....	.....	.....	.....	.....	.14	.08
MnO	trace	trace	.22	trace	.....	.25	.24	.22
NiO	.....	.....	.04	.....	.....	.06	.06	.04
BaO	.....	.....	trace	.48	.....	.06	.06	.06
SrO	.....	.....	trace	.25	.....	.03	.04	.05
Li_2O	.....	.....	none	.....	.....	trace	trace	trace
	99.95	99.97	100.02	99.76	100.12	100.09	100.45	100.13

NORMS.

	A.	B.	C.	D.	E.	F.	G.	H.
or	23.4	22.4	6.1	22.2	.....	3.3	.....	.....
ab	8.9	13.6	13.1	.....	.....	.....	.....	.....
an	18.1	18.1	17.2	5.3	.....	11.1	12.0	18.6
ne	20.1	18.2	6.8	11.1	4.8	11.9	8.5	9.9
kp	.....	.....	.....	.....	25.0	.....	.....	.....
lc	.....	.....	.....	9.6	.....	2.6	4.9	3.1
ac	.....	.....	.....	.....	4.2	.....	.....	.....
di	13.4	14.2	26.4	26.3	.....	29.3	24.6	13.5
ol	10.1	7.6	19.8	12.3	32.3	26.2	32.1	26.1
am	.....	.....	.....	.....	29.8	.....	2.4	13.8
mt	3.8	3.7	3.9	5.6	2.8	7.0	6.3	5.3
il	.....	1.7	4.3	1.2	.6	5.1	5.1	4.4
ap	1.8	.....	1.1	2.6	.....	1.6	1.2	2.6

The appearance of normative kaliophilite in analysis E is very striking. The absence of normative leucite from the "leucite kulaite" is also noticeable.

DIABASE.

Intermediate in texture between basalt and the granitoid gabbros are the diabases, which like basalt, are principally composed of plagioclase, augite, magnetite, and sometimes olivine. Their range of composition is fairly well shown in the next table.

Analyses of diabase.

A. Turnpike Creek, Kittitas County, Washington. Analysis by W. F. Hillebrand. Reported by G. O. Smith to contain plagioclase, augite, olivine, magnetite, and apatite. Magmatic symbol, II.4.3.4. *Tonalose.*

B. Grass Valley, Nevada County, California. Analysis by H. N. Stokes. Described by W. Lindgren. Contains feldspar, pyroxene, hornblende, ilmenite, pyrrhotite, pyrite, and chlorite, with probably a little quartz. Symbol, II.4.4.3. *Bandose.*

C. Shoshone Canyon, Yellowstone National Park. Analysis by Hillebrand. Contains, according to Arnold Hague and T. A. Jaggar, plagioclase, augite, and chlorite. Symbol, II.5.3.4. *Andose.*

D. Aroostook Falls, Maine. Analysis by Hillebrand. Description by H. E. Gregory. Contains plagioclase, pyroxene, pyrite, apatite, chlorite, and a little calcite. Symbol, II.5.3.5. *Beerbachose.*

E. Diabase porphyry, near Milton, Sierra County, California. Analysis by Hillebrand. Described by H. W. Turner. Contains plagioclase, augite, and hornblende. Symbol, III.5.3.4. *Camptonose.*

F. Mount Ascutney, Vermont. Analysis by Hillebrand. Described by R. A. Daly. Contains plagioclase, augite, and magnetite. Symbol, III.5.4.3. *Auvergnose.*

	A.	B.	C.	D.	E.	F.
SiO_2	57.21	53.19	52.18	49.64	51.27	49.63
Al_2O_3	12.99	17.12	18.19	15.07	12.14	14.40
Fe_2O_3	3.28	4.35	3.31	1.66	2.51	2.85
FeO	10.18	5.16	4.36	8.82	6.71	8.06
MgO	1.59	3.98	4.69	5.43	10.86	7.25
CaO	5.97	9.39	6.51	7.23	10.32	9.28
Na_2O	3.07	2.79	4.58	4.19	2.00	2.47
K_2O	1.61	.28	1.88	.89	1.63	.70
H_2O-	.68	.17	.75	.45	.17	.27
H_2O+	1.03	1.21	2.00	2.81	1.16	1.47
TiO_2	1.72	1.34	.99	2.32	.60	1.68
CO_2	.....	.....	none	.32	.....	1.36
P_2O_5	.44	.13	.29	.29	.21	.25
Cl	.....	.....	trace	.....	.....	.07
V_2O_3	none	.....	.....	.04	.....	.....
MnO	.24	trace	.14	.25	.21	.17
NiO	trace	.....	trace	trace	.04	.04
BaO	.06	trace	.11	.02	.07	trace?
SrO	trace	.....	.06	.05	trace?	.....
Li_2O	trace	.....	trace	.....	trace	.....
FeS_2	.13	.94	.....	.79	.....	.22
	100.20	100.05	100.04	100.27	99.92	100.17

NORMS.

	A.	B.	C.	D.	E.	F.
Q	15.4	10.4	.....	.....	.....	1.5
or	9.5	1.7	11.1	5.0	9.5	4.4
ab	26.2	23.6	38.8	35.6	16.8	21.0
an	16.7	33.4	23.4	19.7	19.5	25.9
di	8.9	10.6	7.2	13.9	25.4	16.6
hy	12.5	9.5	3.8	6.0	16.5	19.8
ol	.....	.....	5.8	9.0	5.7	.....
mt	4.9	6.3	4.9	2.3	3.5	4.2
il	3.2	2.5	1.8	4.3	1.2	3.2
pr	.....	.9	.....	.....	.....	.....
ap	1.0	.....	.....	.....	.....	.....

THE GABBROS.

The gabbros, which are the granitoid equivalents of the basalts and diabases, consist mainly of plagioclase and pyroxene, with various admixtures of other minerals. At one end of the series we have anorthosite, or labradorite rock, which is almost entirely composed of feldspar; at the other end the plagioclase diminishes in amount, and the rocks approach the pyroxenites. Normal gabbro contains

monoclinic pyroxene; in norite, rhombic pyroxene, usually hypersthene, appears. The gabbro family is a large one, with many varieties of rock, and only a few examples of it are covered by the subjoined table.

Analyses of gabbros.

A. Anorthosite, Monhegan Island, Maine. Analyzed and described by E. C. E. Lord, Am. Geologist, vol. 26, p. 340, 1900. Nearly pure plagioclase. Magmatic symbol, I.5.5. *Canadase.*

B. Gabbro, near Emigrant Gap, Placer County, California. Analysis by W. F. Hillebrand. Described by W. Lindgren. Contains biotite, hypersthene, diallage, plagioclase, and orthoclase. Symbol, II.5.3.4. *Andose.*

C. Gabbro, Emigrant Gap, California. Analysis by Hillebrand. Described by Lindgren. Contains hypersthene, diallage, plagioclase, and orthoclase. Symbol, III.4.3.4. *Vaalose.*

D. Norite, Elizabethtown, Essex County, New York. Analysis by Hillebrand. Described by J. F. Kemp. Contains labradorite, hypersthene, garnets, augite, hornblende, biotite, magnetite, and apatite. Symbol, III.5.3.4. *Camptonose.*

E. Bronzite norite, Crystal Falls, Michigan. Analysis by G. Steiger. Described by J. M. Clements and H. L. Smyth. Contains bronzite, hornblende, and labradorite. Symbol, III.5.4.3. *Auvergnose.*

F. Olivine gabbro, Birch Lake, Minnesota. Analysis by H. N. Stokes. Contains a large proportion of diallage and olivine. Symbol, III.5.4.3. *Auvergnose.*

G. Hypersthene gabbro, Wetheredville, Maryland. Analysis by Hillebrand. Described by G. H. Williams. Contains hypersthene, diallage, plagioclase, magnetite, and apatite. Symbol, III.5.5. *Kedabekase.*

H. Hypersthene gabbro, Gunflint Lake, Minnesota. Analysis by Stokes. Described by W. S. Bayley. Contains hypersthene, biotite, diallage, magnetite, and plagioclase. Symbol, IV.1.1.2. *Cookose.*

	A.	B.	C.	D.	E.	F.	G.	H.
SiO_2	45.78	55.40	55.87	47.16	48.23	45.66	44.76	46.96
Al_2O_3	30.39	15.32	13.52	14.45	18.26	16.44	18.82	14.13
Fe_2O_3	1.33	2.70	2.70	1.61	1.26	.66	2.19	.76
FeO	1.22	5.49	5.89	13.81	6.10	13.90	4.73	14.95
MgO	2.14	5.75	6.51	5.24	10.84	11.57	11.32	15.97
CaO	16.66	9.90	8.87	8.13	9.39	7.23	14.58	2.32
Na_2O	1.66	2.89	2.42	3.09	1.34	2.13	.89	.35
K_2O	.10	1.52	1.72	1.20	.73	.41	.11	1.68
H_2O-	.51	.03	.09	.12	.26	.07	.17	.07
H_2O+		.38	1.56	.48	2.00	.83	2.36	1.26
TiO_2		.60	.56	3.37	1.00	.92	.13	.62
CO_2				.35	.43			
P_2O_5		.22	.25	.57	.07	.05	none	.03
S				.14				
V_2O_3				(?)				
Cr_2O_3						trace	.08	trace
MnO		.11	.10	.24		trace	.15	.93
NiO				.02		.16		.06
BaO		.07	.02	trace				
SrO		none	none					
Li_2O		trace	trace				trace	
	99.79	100.38	100.08	99.98	99.91	100.03	100.29	100.09

NORMS.

	A.	B.	C.	D.	E.	F.	G.	H.
Q		5.1	8.0					
or	0.6	8.9	10.0	7.2	3.9	2.2	0.6	10.0
ab	12.1	24.6	20.4	26.2	11.0	17.8	7.3	3.1
an	75.1	24.2	20.9	22.0	42.0	34.2	47.0	11.4
ne	1.1							
C								7.5
di	6.1	20.5	19.0	12.5	3.9	1.4	20.1	
hy		11.4	14.6	8.1	29.9	10.1	3.1	57.5
ol	2.5			12.8	2.9	30.3	16.0	6.0
mt	1.9	3.9	3.9	2.3	1.9	.9	3.2	1.2
il		1.1	1.1	6.4	1.8	2.6		1.1
ap				1.3				

These figures, with a range from persalane to dofemane, from I.5.5 to IV.1.1.2, are enough to show the vagueness of the terms gabbro and norite. Although it is difficult to see why B and C should be separated, being placed in different classes, orders, and rangs, the quantitative system brings out the general diversity of character better than the ordinary mineralogical classification. It separates things which, with the exception above noted, are essentially distinct.

FEMIC ROCKS.

From the feldspathic gabbros rocks pass by insensible gradations into varieties which are wholly femic, or nearly so, the pyroxenites, hornblendites, and peridotites. These rocks may contain pyroxene alone, hornblende alone, or olivine alone, or may be mixtures of such minerals. Small quantities of plagioclase may remain as minor impurities; but they count for little in classification. Dunite is nearly pure olivine; saxonite contains enstatite and olivine; picrite is a mixture of augite and olivine. In cortlandtite we have hornblende and olivine; in wehrlite, diallage and olivine; in lherzolite, diopside, a rhombic pyroxene, and olivine. Websterite contains bronzite and diopside, and so forms the pyroxenite end of the series. The nomenclature is varied, and the terms are not rigorously used. Hornblendite is a femic rock in which hornblende is the prevailing mineral.[a] The following table deals with the rocks in which pyroxenes predominate:

Analyses of pyroxenites.

A. Cortlandtite, Belchertown, Massachusetts. Analysis by L. G. Eakins. Described by B. K. Emerson. Contains hornblende, pyroxene, biotite, olivine, and magnetite. Magmatic symbol, IV.1^2.1.1. *Belcherose.*

B. Wehrlite, near Red Bluff, Montana. Analysis by Eakins. Described by G. P. Merrill. Contains olivine, diallage, brown mica, rarely plagioclase, and secondary iron oxides. Symbol, IV.1^3.1.2. *Wehrlose.*

C. Hornblende picrite, North Meadow Creek, Montana. Analysis by Eakins. Described by Merrill. Contains hornblende, olivine, pleonaste, iron oxides, and occasionally hypersthene. Symbol, IV.1^3.1.2. *Wehrlose.*

D. Pyroxenite, Baltimore County, Maryland. Analysis by J. E. Whitfield. Described by G. H. Williams. Contains hypersthene and diallage. Symbol, V.1^1.1.1. *Maricose.*

E. Websterite, Webster, North Carolina. Analysis by E. A. Schneider. Described by Williams. Consists of diopside and bronzite. Symbol, V.1^1.2.1. *Websterose.*

F. Websterite, Oakwood, Maryland. Analysis by W. F. Hillebrand. Described by A. G. Leonard. Contains hypersthene and diallage. Symbol, V.1^1.1.2. *Cecilose.*

G. Lherzolite, Baltimore County, Maryland. Analysis by T. M. Chatard. Described by Williams. Contains olivine, bronzite, and diallage; the olivine partly serpentinized. Symbol, V.1^2.1.1. *Baltimoriase.*

H. Pyroxenite, Baltimore County, Maryland. Analysis by Whitfield. Described by Williams. Contains hypersthene and diallage. Symbol, V.1^2.1.2. *Baltimorose.*

---

[a] Two analyses of hornblendites are given in Washington's tables, Prof. Paper U. S. Geol. Survey No. 14, pp. 345, 359, 1903.

	A.	B.	C.	D.	E.	F.	G.	H.
SiO_2	48.63	48.95	46.13	51.94	55.14	53.21	43.87	50.80
Al_2O_3	5.32	5.69	4.69	2.53	.66	1.94	1.64	3.40
Fe_2O_3	2.91	1.20	.73	2.88	3.48	1.44	8.94	1.39
FeO	3.90	12.11	16.87	9.38	4.73	7.92	2.60	8.11
MgO	21.79	23.49	25.17	25.97	26.66	20.78	27.32	22.77
CaO	13.04	5.33	4.41	3.60	8.39	13.12	6.29	12.31
Na_2O	.34	1.58	.08	none	.30	.11	} .50	} trace
K_2O	.23	.79	trace	none	.....	.07		
H_2O-	} 2.81	} .18	} 1.38	} 2.82	} .38	.14	1.08	} .52
H_2O+						.87	7.64	
TiO_2	.47	.81	.73	none	trace	.26	.12	none
P_2O_5	.21	.12	.07	none	.23	trace	trace	trace
CO_2	trace	.....	.....	.....	.....	.10	.....	.....
S	.....	.....	.24	.....	.....	.....	.....	.....
SO_3	.....	.....	.....	.19	.....	.....	.....	trace
Cl	.....	.....	.....	.16	.....	.....	.....	.24
V_2O_3	.....	.....	.....	.....	.....	.03	.....	.....
Cr_2O_3	.36	.05	.04	.60	.25	.20	.44	.32
MnO	.12	.08	trace	trace	.03	.22	.19	.17
(NiCo)O	.....	.16	.09	.....	.11	.03	trace	.....
FeS_2	.....	.....	.....	.....	.....	.03	.....	.....
	100.13	100.54	100.63	100.07	100.36	100.47	100.63	100.03

NORMS.

	A.	B.	C.	D.	E.	F.	G.	H.
Q	.....	.....	.....	.6	1.7	.....	.....	.....
or	1.1	5.0	.....	.....	.....	.6	.....	.....
ab	2.6	13.6	.5	.....	2.6	1.0	4.2	.....
an	12.5	5.6	12.5	6.7	.....	3.2	2.2	9.2
di	41.7	16.5	7.6	8.9	32.7	48.9	22.6	41.4
hy	21.9	18.5	44.8	76.4	57.1	41.4	34.3	33.8
ol	11.7	37.6	30.4	.....	.....	.....	16.3	12.2
mt	5.1	1.6	.9	2.8	5.1	2.1	8.4	2.1
hm	.....	.....	.....	.....	.....	.....	3.0	.....
il	.....	1.5	1.2	.....	.....	.5	.....	.....

The general presence of chromium and nickel in these rocks is noteworthy. The wehrlite (analysis B) is almost on the line between pyroxenites and peridotites. The formation of actual diallage from the normative diopside in it would give the pyroxenes a slight predominance over the olivine. The following analyses represent peridotites:

Analyses of peridotites.

A. Cortlandtite, Ilchester, Maryland. Analysis by W. F. Hillebrand. Described by G. H. Williams. Contains olivine, pyroxene, and hornblende partly altered to talc. Magmatic symbol, IV.1[4].1.1. *Cortlandtose.*

B. Peridotite, near Silver Cliff, Colorado. Analysis by L. G. Eakins. Described by W. Cross. Contains hornblende, biotite, hypersthene, olivine, a little plagioclase, apatite, pyrrhotite, and sillimanite. Symbol, IV.1[4].1.2. *Custerose.*

C. Peridotite, near Opin Lake, Michigan. Analysis by Hillebrand. Described by C. R. Van Hise and W. S. Bayley. Contains diallage, olivine, magnetite, and plagioclase. Symbol, IV.2[3].1.2.

D. Mica peridotite, Crittenden County, Kentucky. Analysis by Hillebrand. Described by J. S. Diller. Contains biotite, serpentine, and perofskite, with less apatite, muscovite, magnetite, calcite, chlorite, and other secondary products. Symbol, IV.2[4].1.2. Subrang of *Casseliase.*

E. Saxonite, Douglas County, Oregon. Analysis by F. W. Clarke. Described by J. S. Diller and F. W. Clarke. Contains olivine and enstatite, with a little magnetite and chromite. Symbol, V.1[4].1.1.

F. Dunite, Corundum Hill, North Carolina. Analysis and description by T. M. Chatard. Contains olivine, with a little chromite. Symbol, V.1[5].1.1. Dunose.

G. Peridotite, Tulameen River, British Columbia. Analysis by Hillebrand. Described by J. F. Kemp. Contains olivine and serpentine, with magnetite, magnesite, and calcite. Symbol, V.1[5].1.1. *Dunose.*

	A.	B.	C.	D.	E.	F.	G.
SiO_2	39.20	46.03	39.37	33.84	41.43	40.11	38.40
Al_2O_3	4.60	9.27	4.47	5.88	.04	.88	.29
Fe_2O_3	3.45	2.72	4.96	7.04	2.52	1.20	3.42
FeO	6.15	9.94	9.13	5.16	6.25	6.09	6.69
MgO	31.65	25.04	26.53	22.96	43.74	48.58	45.23
CaO	3.23	3.53	3.70	9.46	.55	.....	.35
Na_2O	.42	1.48	.50	.33	.....	.....	.08
K_2O	.14	.87	.26	2.04	.....	.....	
H_2O-	.50	.64	.87	7.50	.....	.....	.24
H_2O+	9.38		7.08		4.41	2.74	4.11
TiO_2	.52	.....	.66	3.78	.....	.....	none
CO_2	.....	.....	1.23	.43	.....	.....	1.10
P_2O_5	trace	.17	.17	.89	.....	.....	trace
S	.....	.....	.....	.....	.....	.....	.06
Cl	.....	.....	.....	.05	.....	.....	.....
Cr_2O_3	.41	.....	.68	.18	.76	.18	.07
MnO	.20	.40	.12	.16	none	.....	.24
NiO	.30	.....	.21	.10	.10	.....	.10
BaO	.....	.....	trace	.06	.....	.....	none
Chromite	.....	.....	.....	.....	.....	.56	.....
	100.15	100.09	99.94	99.86	99.80	100.34	100.38

NORMS.

	A.	B.	C.	D.	E.	F.	G.
or	0.6	5.0	1.7	.....	.....	.....	.....
ab	3.1	12.6	4.2	.....	.....	.....	.....
an	10.6	16.1	9.2	8.6	.....	.....	0.8
ne	.....	.....	.....	1.4	.....	.....	.....
lc	.....	.....	.....	9.6	.....	.....	.....
C	.....	.....	.....	.....	.....	0.9	.....
di	4.4	.....	7.4	7.7	2.3	.....	.4
hy	16.8	16.7	21.1	.....	19.3	4.7	6.2
ol	47.9	44.3	37.5	37.6	69.2	89.7	81.9
am	.....	.....	.....	8.5	.....	.....	.....
mt	5.1	3.9	7.2	6.0	3.5	1.6	4.9
hm	.....	.....	.....	2.9	.....	.....	.....
il	.9	.....	1.2	7.1	.....	.....	.....
cm	.....	.....	1.0	.....	1.2	.8	.....
ap	.....	.4	.....	1.9	.....	.....	.....

In the peridotites a certain amount of serpentinization is almost always observed. This is shown in the analyses by the unusually large percentages of water. The latter is neglected in calculating the norms, and so normative hypersthene appears, which an absolutely unaltered rock would not show. That is, serpentine, instead of representing the parent olivine, is equivalent to hypersthene plus olivine, and the norms become misleading. A rock consisting originally of pure olivine might find its place in any one of several different rangs or subrangs, according to the amount of alteration which it has undergone. Two samples from the same rock mass might vary in this manner. Theoretically, no doubt, the quantitative classification applies only to fresh material; practically it is applied to altered peridotites, like those cited above, which all appear in Washington's tables.

BASIC ROCKS.

A few igneous rocks exist which seem to form an exceptional group by themselves. They consist largely, or even mainly, of free basic oxides, such as corundum or magnetite; and many transitional mixtures lie between them and the ordinary silicate rocks. With these oxides it is convenient to group certain titaniferous rocks, which otherwise might form a class by themselves. The following analyses represent a few rocks of this truly *basic* character, with examples of the transitional forms:

Analyses of basic and titaniferous rocks.

A. Corundum pegmatite, Ural Mountains, Siberia. Described and analyzed by J. Morozewicz, Min. pet. Mitth., vol. 18, p. 219, 1898. Contains corundum and orthoclase, with accessory rutile, apatite, and zircon. Magmatic symbol, $I^1.5.1.3$. *Uralose.*

B. Kyschtymite, Borsowka, Ural Mountains. Described and analyzed by Morozewicz, op. cit., p. 212. Contains corundum, with a little spinel, anorthite, biotite, and zircon. Symbol, $I^1.5.5$. *Kyschtymose.*

C. Ilmenite norite, Soggendal, Norway. Described and analyzed by C. F. Kolderup, Bergens Museums Aarbog, 1896, p. 165. Contains, in approximate percentages, ilmenite, 37.5; hypersthene, 40.1; anorthite, 11; albite, 8.7; orthoclase, 0.9. Symbol, $IV.3^1.1.3$. *Bergenose.*

D. Titaniferous iron ore, Lincoln Pond, Essex County, New York. Analysis by W. F. Hillebrand. Described by J. F. Kemp. Symbol, $IV.4^2.1.4$. *Adirondackiase.*

E. Titaniferous iron ore, Elizabethtown, New York. Analysis by Hillebrand. Described by Kemp. Symbol, $IV.4^1.1.4$. *Champlainiase.*

F. Magnetite spinellite, Routivaara, Finland. Analyzed and described by W. Petersson, Geol. Fören. Förhandl., vol. 15, p. 49, 1893. Symbol, $V.5^1.1.4$. No magmatic name assigned.

	A.	B.	C.	D.	E.	F.
SiO_2	40.06	16.80	31.59	11.73	13.35	4.08
Al_2O_3	13.65	13.89	8.54	6.46	8.75	6.40
Fe_2O_3	.35	.76	24.52	30.68	20.35	33.43
FeO	.....	.....	2.36	27.92	28.82	34.58
MgO	.15	.61	10.70	3.35	6.63	3.89
CaO	.30	7.26	2.25	3.95	2.15	.65
Na_2O	3.71	.38	1.03	.50	.....	.29
K_2O	5.20	.13	.15	.26	.....	.15
H_2O	.46	.76	.....	.64	1.68	1.32
TiO_2	.....	.....	18.49	12.31	16.45	14.25
CO_2	.....	.....	.....	.32	.17	.....
P_2O_5	.....	.....	.02	.82	.02	.02
S	.....	.....	.....	.04	.09	.....
Cl	.....	.....	.....	.12	trace	.....
V_2O_3	.....	.....	.....	.04	.61	.....
Cr_2O_3	.....	.....	.....	.....	.55	.20
MnO	.....	.....	.....	.....	.....	.45
Organic matter	.....	.....	.....	.05	trace	.....
Corundum	35.40	[a] 59.51	.....	.....	.....	.....
	99.28	100.10	99.65	99.19	99.62	99.71

[a] Including a little spinel.

NORMS.

	A.	B.	C.	D.	E.	F.
or	30.6	0.6	1.1	.....	.....	1.1
ab	27.2	.....	8.4	.....	.....	2.6
an	1.4	35.9	11.1	14.0	10.8	3.1
ne	2.3	1.7	.....	2.3	.....	.....
lc	.....	.....	.....	1.3	.....	.....
C	36.8	59.5	2.7	.....	4.8	4.6
hy	.....	.....	34.6	.....	5.7	.....
ol	.7	2.0	3.8	10.6	14.8	.....
mt	.....	.....	3.5	44.5	29.5	48.5
il	.....	.....	35.1	23.7	31.0	26.8
ap	.....	.....	.....	1.9	.....	.....
MgO	.....	.....	.....	.....	.....	3.9
FeO	.....	.....	.....	.....	.....	6.9

The cumberlandite of Cumberland, Rhode Island, a peridotite rich in titaniferous magnetite, also belongs in this group; and many other similar mixtures are known. The New York ores are found in close association with norites or gabbros. Rocks of this class could hardly be associated with persilicic masses, such as granites or syenites. They represent a marked deficiency of silica in the magmas from which they came.

LIMITING CONDITIONS.

Although the igneous rocks, as the analyses and descriptions show, represent a great variety of mineral mixtures, their proximate constitution is subject to distinct limitations. In the preceding chapter upon rock-forming minerals, some of these limitations were indicated, and it was shown that certain species can appear only under certain definite conditions. The experiments of Morozewicz upon the separation of corundum, iolite, etc., from magmas are cases in point. It may be well, however, to reiterate some of the observations which have already been made or suggested, in order to properly emphasize these important considerations. For this purpose we need only take into account the more conspicuous magmatic minerals, and neglect the rarer species.

Since nearly all igneous rocks are formed chiefly of silicates, a partial table of rock-forming minerals, arranged by bases with reference to maximum and minimum silica, will be convenient. The minerals to be thus considered are the following:

Rock-forming minerals.

Base.	Maximum silica.	Minimum silica.
Potassium	Orthoclase, $KAlSi_3O_8$	Leucite, $KAlSi_2O_6$.
Sodium	Albite, $NaAlSi_3O_8$	Nephelite, $NaAlSiO_4$.
Calcium	Diopside, $CaMgSi_2O_6$	Anorthite, $CaAl_2Si_2O_8$.[a]
Magnesium	Enstatite, $MgSiO_3$	Forsterite, Mg_2SiO_4 } Olivine.
Ferrous iron	Pyroxene, $FeSiO_3$	Fayalite, Fe_2SiO_4 } Olivine.
Ferric iron	Acmite, $FeNaSi_2O_6$	Magnetite, Fe_3O_4.
Aluminum	Albite, $NaAlSi_3O_8$	Corundum, Al_2O_3.

[a] *Melilite*, a basic silicate, is here left purposely out of account, and so, too, is akermanite.

Intermediate minerals, such as analcite, biotite, muscovite, etc., that contain water, can form only under pressures or conditions of viscosity which prevent the water from expulsion.

The two oxides in the foregoing list can only appear in notable amounts when the iron or alumina is largely in excess of the silica. The latter will go to the formation of silicates until it is saturated, and after that any superfluous oxide can be deposited. This statement, however, demands qualification. Free silica and magnetite can coexist in igneous rocks to a very limited extent, but not as principal constituents. The conditions of their coexistence are uncertain, but are possibly due to dissociation in the molten magma. It is conceivable that the latter may solidify under circumstances of viscosity which prevent some of the separated ions from uniting, so that a little quartz and a little magnetite may be present, side by side, in the same rock. This explanation, however, is merely speculative and requires proof.[a] The exception does not invalidate the broad general statement that the two species are essentially incompatible. Much magnetite and much quartz do not occur together in rocks of igneous origin.

Similar incompatibilities are shown elsewhere in the table. Leucite and silica will form orthoclase; nephelite and silica yield albite; a member of the olivine family with silica will be converted into pyroxene, and so on. With an excess of silica over that required to generate compounds which appear in the minimum column, higher silicates will be produced; and as silica is abundant in the lithosphere the maximum is most often reached. Feldspars and pyroxenes are much more common than lenad minerals or olivine. The occasional concurrence of quartz and olivine in some basalts and gabbros may perhaps be due to the same dissociation as that suggested by the coexistence of quartz and magnetite. The general tendency in a cooling magma is toward the generation of saturated compounds. When silica exceeds the amount which can be taken up by the bases, the excess appears as quartz, tridymite, or opal, or else it becomes an undifferentiated portion of a residual glass.

With adequate silica, then, the number of compounds which a magma can yield is small. The persilicic rocks, therefore, are relatively simple in their mineralogical constitution, and in the quantitative classification their modes do not differ very greatly from their norms, except with respect to the micas, hornblendes, and augite. But as silica diminishes in amount the mineralogical complexity of a rock is likely to increase, for the reason that a larger range of unions has become possible. For each base a number of compounds are capable of formation and the same magma, solidifying under different conditions, may yield very dissimilar products. In other

[a] *It has also been mentioned in Chapter IX, on the molten magma.*

words, we encounter the well-known fact that two rocks may have the same ultimate composition and yet contain different mineral species. The difficulty of apportioning the several bases to the several minerals in a rock is familiar to everyone who has tried to discuss any large number of rock analyses. Potassium may form orthoclase, leucite, muscovite, or biotite; sodium may yield albite, nephelite, analcite, alkali hornblende, or acmite; calcium appears in pyroxene, amphibole, anorthite, or melilite; magnesium in pyroxene, amphibole, olivine, or biotite; iron in pyroxene, amphibole, olivine, acmite, magnetite, or ilmenite; and aluminum in feldspars, lenads, micas, amphibole, pyroxenes, or corundum. The conditions of equilibrium have become exceedingly complicated, and it is only as we approach the subsilicic magmas that simplicity is again restored. With deficient silica the number of possibilities is lessened and such simple rocks as the peridotites and pyroxenites are formed. An intermediate magma may be simple from lack of certain constituents, but cases of that kind are exceptional. The mediosilicic rocks are as a rule more complex mineralogically than the persilicic or subsilicic extremes. The ends of the petrographic series, free silica, or free basic oxides, are necessarily the simplest rocks of all. At one end we have segregations of quartz; at the other, corundum rocks or magnetite. Rocks midway between these extremes, with silica ranging from 45 to 55 per cent, contain the greatest variety of minerals, for ortho-, meta-, and tri-silicates are then capable of coexistence. In a rock containing silicates of all three classes, with alumina, lime, magnesia, the two alkalies, and both oxides of iron as bases, the possibilities of union become very numerous. In the magma itself the bases will be apportioned to the several silicic acids in accordance with the law of mass action, each one being governed by the relative number of its molecules in a unit volume of solution. When cooling begins, the separation of each mineral will depend upon its fusibility, its solubility, and its relation to the possible eutectic ratios; and the solubility will fluctuate with changes in the temperature of the mass. With each deposition of crystals all of the foregoing conditions will change, for the composition of the residual fluid will have been altered. In theory, then, the physical and chemical conditions of solidification are most complex, except for two-component and possibly three-component systems. We are therefore compelled to deal with the problem of rock composition empirically and to make use of rules based upon direct observation. These rules are by no means rigorous, for although the separation of minerals from a cooling magma generally follows a stated order that order often varies. In most cases it is the order described by H. Rosenbusch,[a] as follows:

[a] Elemente der Gesteinslehre, 1898, p. 40.

1. Apatite, zircon, spinel, the titanates, and iron ores. These are almost invariably the first minerals to crystallize.

2. The Mg-Fe, Mg-Ca, and Fe-Ca silicates, such as olivine, amphibole, and pyroxene. Biotite is also placed in this class. As a rule the orthosilicates precede the metasilicates; olivine, for example, separating before pyroxene.

3. Feldspars and lenads in the order anorthite, plagioclase, alkali feldspars, nephelite, leucite.

4. Any excess of quartz.

The frequency with which this order is followed is probably a consequence of the fact that most rocks consist mainly of alumosilicates, and especially of feldspars and quartz. That is, they contain predominantly compounds of the same class, in which the other rock-forming minerals are dissolved. The latter separate from solution in the general order of their solubility, the least soluble first; but that property varies with the composition of the mixture. In an isomorphous series, like the feldspars, the least fusible tend to be deposited earlier than the others, but fusibility is a minor factor in the process of solidification. Quartz, which solidifies in most cases at the very end of the series, is a relatively infusible substance; but, as we have already seen, it probably forms a eutectic mixture with the feldspars which, by virtue of its depressed melting point, is the last part of a magma to congeal. The minor accessories among the rock-forming minerals, which crystallize first although present in trifling amounts, possibly form no eutectics with the feldspars. Otherwise we should expect them to remain in solution much longer.

PROXIMATE CALCULATIONS.

It is clear, from what has been already said, that it is rarely possible to predict, with anything like quantitative accuracy, what minerals will form when a magma of given composition solidifies. Partial and semiquantitative forecasts are practicable; we can say, for instance, that the proportion of orthoclase will lie between assignable limits; and if the analysis shows a ratio of silicon to oxygen lower than Si_3O_8, or 1 : 2.667, we may be reasonably sure that a calculable amount of silica will remain uncombined. Only in the simplest cases can a complete forecast be made, and they are exceptional.

Suppose, however, that instead of a magma or an analysis representing a magma and nothing more we attempt to discuss the composition of a rock in which the separate minerals have been identified by the microscope. In other words, suppose we have the bulk analysis of a rock and also its petrographic description; how far can we compute its proximate composition? To this question no single answer can be given; in some cases the computation is easy, in others it is impossible. The conventional "norms" of the quantitative classification can always be calculated, but the actual composition may be quite another thing. It is the latter which concerns us now. Let us take some concrete examples for discussion.

Two rocks of relatively simple composition are the following, for which data are given in Survey Bulletin No. 228, and also in Washington's tables.

A. Granite-syenite porphyry, Little Rocky Mountains, Montana. Analysis by H. N. Stokes. Described by W. H. Weed and L. V. Pirsson. Contains orthoclase, quartz, oligoclase, muscovite, and iron oxides. *Liparose.*

B. Biotite granite, El Capitan, Yosemite Valley. Analysis by W. Valentine. Described by H. W. Turner. Contains alkali feldspar, plagioclase, quartz, biotite, titanite, apatite, and iron oxides. The analysis shows that a trace of zircon is probably present also. *Toscanose.*

ANALYSES.

	A.	B.
SiO_2	68.65	71.08
Al_2O_3	18.31	15.90
Fe_2O_3	.56	.62
FeO	.08	1.31
MnO	.....	.15
MgO	.12	.54
CaO	1.00	2.60
SrO	.10	.02
BaO	.13	.04
Na_2O	4.86	3.54
K_2O	4.74	4.08
H_2O-	.27	.....
H_2O+	.83	.30
TiO_2	.20	.22
ZrO_2	.....	.08
P_2O_5	.....	.10
Cl	.03	.02
	99.88	100.60

NORMS.

	A.	B.
Q	20.2	27.8
or	27.8	23.9
ab	40.9	29.9
an	5.0	13.1
C	3.5	.9
hy	.3	3.3
mt	.2	.9
hm	.4	.....

In calculating the actual composition of these rocks, it is best to first eliminate the accessories. ZrO_2 is calculated as zircon, Fe_2O_3 as hematite or magnetite, P_2O_5 and Cl as apatite, and TiO_2 as ilmenite, titanite, or rutile, according to the indications given in the petrographic descriptions. All remaining CaO is then reckoned as equivalent to anorthite, and all Na_2O as albite. In A the trivial amount of MgO is *assumed* to be in the form $MgSiO_3$, that is, as pyroxene or amphibole; in B the magnesia and remaining iron oxide are to be computed as biotite, with the normal formula $Al_2(MgFe)_2KHSi_3O_{12}$. Upon comparing K_2O with the remainder of the Al_2O_3, the latter, in A, is found to be in excess of the amount required for orthoclase. That excess gives a datum for the calculation of muscovite; and when that is deducted, only quartz and orthoclase remain to be considered. The orthoclase is given by the K_2O and Al_2O_3 still unappropriated, and the remaining free silica represents the quartz. The results of the computation are shown below, the trifling amount of MnO being consolidated with FeO, and the SrO and BaO with lime. A little water is left unaccounted for, presumably as uncombined with any silicate.

Calculated composition of rocks represented in preceding table.

	A.	B.
Quartz	19.98	29.64
Orthoclase	18.90	19.74
Albite	41.07	29.87
Anorthite	5.41	12.23
Muscovite	13.06	.....
Biotite	.....	6.50
$MgSiO_3$	.30	.....
Zircon	.....	.12
Titanite	.....	.54
Apatite	.....	.24
Ilmenite	.17	.....
Rutile	.11	.....
Magnetite	.....	.93
Hematite	.56	.....
	99.56	99.81

These calculations are simple enough, and the results are fairly accurate. The chief uncertainties are with the micas, and especially with the biotite in B, for rock-forming biotite is a mineral of variable composition, and their errors affect the computations with regard to orthoclase and quartz. A comparison of the last table with that of the norms will show how far the two methods of calculation diverge.

Suppose, however, that we are called upon to discuss the composition of a rock containing orthoclase, plagioclase, biotite, augite, olivine, and magnetite, with the femic minerals present in fairly large proportions. In such a case the alumina goes to form five of the component minerals, iron to four, lime to two, magnesia to three, and potassium to two. We now need more data than the bulk analysis and the usual petrographic description can give us, and the required information may be obtained either from chemical or from physical sources. Chemically, we may separate the biotite, augite, and olivine from the rock and analyze each one by itself. In that way we can learn something of the distribution of the bases, and so become able to calculate the composition of the rock. Or, olivine being soluble in very dilute acids, we may dissolve it out from a known weight of rock and determine the amount of iron and magnesia which belong to it. The same procedure may be followed for the determination of nephelite when that mineral happens to be present. Physically, the rock may be studied in thin sections under the microscope, when the areas occupied by the several minerals can be measured with a micrometer. Given a sufficient number of such measurements, and, the densities of the minerals being known, the relative proportions of the elements may be calculated, and the results obtained can be checked by the chemical analysis.[a] A cruder process consists in taking an en-

[a] This method is fully discussed in the Quantitative Classification, pt. 3, pp. 186–230, together with the subject of calculating norms and modes. According to Ira A. Williams, however (Am. Geologist, vol. 35, p. 34, 1905), the micrometer method is unsatisfactory. See also A. Rosiwal, Verhandl. K.-k. geol. Reichsanstalt, 1898, p. 143.

larged photomicrograph of the thin section, cutting the areas representing the minerals out of the paper, and then, by weighing the latter, ascertaining their relative proportions. In some cases a rock powder, in known quantity, can be mechanically separated into its mineral constituents by means of Thoulet's or other heavy solutions, and the individual portions so determined directly. By one method or another the problem of mineral composition can generally be solved. Only when a rock contains much glass or other indeterminate matter is the problem incapable of fairly accurate solution. If alteration products are present—chlorites, zeolites, kaolin, limonite, etc.—the discussion of modes becomes very unsatisfactory, and the conclusions which are then reached have very slender value.

NOTE.—The composition of igneous rocks is often represented graphically by means of diagrams, and several methods for doing this have been devised. For an exhaustive memoir upon this subject see J. P. Iddings, Prof. Paper U. S. Geol. Survey No. 18, 1903. The diagrams are of considerable service to the petrographer, for they bring chemical relationships and differences vividly before the eye.

CHAPTER XII.

THE DECOMPOSITION OF ROCKS.

THE GENERAL PROCESS.

When a rock is exposed to atmospheric agencies it undergoes a partial decomposition and becomes gradually disintegrated. Some of its substance is dissolved by percolating waters, themselves of atmospheric origin, and is so carried away; the remaining material, partly hydrated and partly unchanged in composition, contains products which are easily separable from one another. By flowing streams the finer clays or silts are taken away from the coarser and heavier sand grains, and this process is an important step toward the ultimate formation of sandstones and shales. Solution, hydration, disintegration, and mechanical sorting are the successive stages of rock decomposition. I speak now in general terms. The subsidiary agents of decomposition will be considered in their proper connection later.

The breaking down of a rock is effected partly by mechanical and partly by chemical means. Mechanical agencies, such as the grinding power of glaciers, the pounding of waves, erosion by streams, the disruptive effects of frost, or the action of wind-blown sand, tend to separate the particles of a rock and to furnish fresh surfaces to chemical attack. Unequal expansion, due to alternations of heat and cold, also assists in producing disintegration.[a] The distribution of volcanic dust is still another mode by which finely subdivided rock is rendered available for aqueous decomposition. The latter depends for its efficiency partly upon the water itself and partly upon dissolved acids, salts, or gases. Rain water falls upon the surface of a rock and sinks more or less deeply into its pores and crevices. Rain, as we have already seen,[b] carries oxygen and carbon dioxide in solution, together with other substances in varying proportions. Water and gas both exert a solvent action, and the fluid which then saturates the rock becomes charged with the products of solution. These may intensify or inhibit further action, according to circumstances. Some of the dissolved matter, redeposited, may form a protecting film and so delay or prevent further solution. This retardation, however, is

[a] This subject is fully discussed by J. C. Branner, in his paper upon the decomposition of rocks in Brazil, Bull. Geol. Soc. America, vol. 7, p. 255, 1896.

[b] See *ante*, pp. 44 et seq.

temporary, for mechanical disintegration is accompanied by a rubbing of the loosened particles together, and so the coating of insoluble matter is removed.

Normal air contains, in round numbers, 21 per cent by volume of oxygen and 0.03 of carbon dioxide. In rain water these active gases are concentrated, as shown by the analyses of R. W. Bunsen.[a] Air extracted from rain water at different temperatures has the composition by volume given below.

Composition of air extracted from rain water at different temperatures.

	0°.	5°.	10°.	15°.	20°.
Carbon dioxide	2.92	2.68	2.46	2.26	2.14
Oxygen	33.88	33.97	34.05	34.12	34.17
Nitrogen[a]	63.20	63.35	63.49	63.62	63.69
	100.00	100.00	100.00	100.00	100.00

[a] Including argon.

As waters of this character sink deeper into a rock mass, a portion of their effectiveness is lost, for oxygen and carbon dioxide are chiefly consumed near the surface, and their share of the chemical effect tends to become zero. The decrease in the case of oxygen is clearly shown by the experiments of B. Lepsius,[b] who has analyzed the gaseous contents of waters from three bore holes of different depth. Air extracted from water at 12 meters below the surface contained 24.06 per cent of oxygen, at 18 meters, 21.97 per cent, and at 25 meters, only 12.90 per cent. In rock decomposition, then, oxidation is largely a surface phenomenon, and the action of carbon dioxide, so far as it is directly obtained from the atmosphere, must follow the same rule. Carbonic acid, however, is also derived from other sources, so that its effects are not necessarily limited to the upper strata. Its presence in ground waters will be considered presently.

When meteoric waters act upon a mass of rock, the effects produced will depend upon the nature of the minerals which they encounter. Let us confine our attention for the moment to the more important species of magmatic origin, such as the feldspars, micas, pyroxenes, amphiboles, olivine, leucite, nephelite, and the typical sulphide, pyrite. The last-named mineral, although found in relatively small proportions, is nevertheless important, for by oxidation and hydration it yields solutions of sulphates having a distinctly acid reaction. These acid solutions act strongly upon other constituents of rocks, and intensify the activity of the percolating waters. The sulphates

[a] Ann. Chem. Pharm., vol. 93, p. 48, 1855. See also M. Baumert, idem, vol. 88, p. 17, 1853.

[b] Ber. Deutsch. chem. Gesell., vol. 18, p. 2487, 1885. Evidence of similar purport has been recorded by other observers.

contained in natural waters are largely derived from this source, at least primarily. The re-solution of secondary sulphates is of course not to be overlooked, but it is obviously a later phenomenon.

SOLUBILITY OF MINERALS.

That nearly all minerals are more or less attacked by water has long been known, and also that carbonated waters act still more energetically. The experiments of W. B. and R. E. Rogers,[a] in 1848, established these facts conclusively. Many minerals were tested, and all were perceptibly soluble. From 40 grains of hornblende, digested during forty-eight hours in water charged with carbonic acid, 0.08 grain of silica, 0.095 of ferric oxide, 0.13 of lime, and 0.095 of magnesia, or nearly 1 per cent in all, were extracted.[b] In the classical investigations of A. Daubrée[c] 3 kilograms of orthoclase, agitated with pure water for 192 hours in a revolving iron cylinder, yielded a solution containing 2.52 grams of K_2O, with trifling amounts of silica and alumina. Two kilograms of the feldspar, shaken for ten days in water saturated with carbon dioxide, gave 0.270 gram of K_2O with 0.750 of silica. The amount of decomposition was greater, but the quantity of potash passing into solution was less. A 3 per cent solution of sodium chloride was a much less effective agent than water alone. Leucite was not so vigorously attacked as orthoclase.

In 1867 A. Kenngott[d] showed that many minerals gave an alkaline reaction when in contact with moistened test paper; and in 1877 R. Müller[e] published an important memoir upon the solubility of various species in carbonated water. The powdered substances were digested in the solvent during seven weeks, and after that treatment the dissolved portions were quantitatively analyzed. The results are summed up below. The percentages of the several constituents determined refer to the total amount of each in a given mineral; the "sum" is the percentage of all dissolved matter in terms of the original substance. That is, under K_2O 1.3527 per cent of the total potash in orthoclase was dissolved, while only 0.328 per cent of the entire mineral passed into solution.

---

[a] Am. Jour. Sci., 2d ser., vol. 5, p. 401, 1848.

[b] The temperature at which the experiment was conducted was 60°, presumably Fahrenheit.

[c] Études synthétiques de géologie expérimentale, pp. 271–275. See also p. 252 for an experiment upon the solubility of granite.

[d] Neues Jahrb., 1867, pp. 77, 769.

[e] Jahrb. K.-k. geol. Reichsanstalt, vol. 27, Min. Mitth., p. 25, 1877. Müller gives a good summary of previous work upon the subject, and cites, in addition to the memoirs mentioned here, papers by Dittrich, Haushofer, Ludwig, Hoppe-Seyler, and others. A later summary, by F. K. Cameron and J. M. Bell, is in Bull. No. 30, Bureau of Soils, U. S. Dept. Agric., p. 12, 1905. P. Pichard (Ann. chim. phys., 5th ser., vol. 15, p. 529, 1878) found that several magnesian silicates gave alkaline reactions with litmus paper. F. Sestini (abstract in Zeitschr. Kryst. Min., vol. 35, p. 511, 1902) made similar, but quantitative observations on augite, amphibole and tremolite. According to F. Cornu (Min. pet. Mitth., vol. 24, p. 417, 1905; vol. 25, p. 489, 1907), who tested many minerals with litmus, kaolinite, pyrophyllite, nontronite, etc., give acid reactions.

Material extracted from minerals by carbonated water.

	SiO_2.	Al_2O_3.	K_2O.	Na_2O.	MgO.	CaO.	P_2O_5.	FeO.	Sum.
Adularia	0.1552	0.1368	1.3527	.....	.....	.....	.....	trace	0.328
Oligoclase	.237	9.1713	.....	2.367	.....	3.213	.....	trace	.533
Hornblende	.419	trace	trace	.....	.....	8.528	.....	4.829	1.536
Magnetite	.....	.....	.....	.....	.....	.....	.....	.942	.307
Do	trace	.....	.....	.....	.....	.....	.....	2.428	1.821
Apatite	.....	.....	.....	.....	.....	1.696	1.417	.....	1.529
Do	.....	.....	.....	.....	.....	2.168	1.822	.....	2.018
Do	.....	.....	.....	.....	.....	1.946	2.12	trace	1.976
Olivine	.873	trace	.....	.....	1.291	.....	.....	8.733	2.111
Serpentine	.354	.....	.....	.....	2.649	.....	.....	1.527	1.211

The relative solubility of several minerals, chiefly magnesian species, in ordinary water was determined by E. W. Hoffmann [a] in 1882. His method of procedure consisted in allowing water to percolate through the powdered material for two months and measuring the loss of weight; a possibility of gain by hydration seems not to have been considered. The data given are as follows:

Relative solubility of various minerals in water.

	Grams taken.	Loss of weight.
Vesuvianite	4.109	0.064
Epidote	3.353	.052
Olivine	3.506	.078
Chlorite	2.591	.094
Talc	1.1245	.105
Muscovite	.5058	.056
Biotite	.9736	.035

The excessive solubility here shown for talc and muscovite is highly questionable. Hoffmann's experiments are entitled to very little weight. It has been shown by Alexander Johnstone [b] that micas exposed to the action of pure and carbonated waters during an entire year became hydrated and increased in volume. The latter phenomenon may account for the easy weathering of micaceous sandstones. Muscovite appeared to be insoluble, but in a solution of carbonic acid the biotite lost magnesia and iron. In another communication [c] Johnstone states that olivine is slightly attacked by carbonated water; and in still another [d] he described the action of that reagent upon orthoclase, oligoclase, labradorite, hornblende, augite, etc. Among the feldspars, orthoclase was the least and labradorite the most soluble; hornblende and augite were acted upon even more rapidly. These observations seem to be in harmony with those of Müller, whose figures show a similar order of magnitude among the determined solubilities.

[a] Inaug. Diss., Leipzig, 1882.
[b] Quart. Jour. Geol. Soc., vol. 45, p. 363, 1889.
[c] Proc. Roy. Soc. Edinburgh, vol. 15, p. 436, 1888.
[d] Trans. Edinburgh Geol. Soc., vol. 5, p. 282, 1887.

In recent years a few data have been published by C. Doelter [a] relative to anorthite, nephelite, and some zeolites. The nephelite in particular was strongly attacked by carbonic acid. There are also experiments by F. W. Clarke [b] on the alkalinity of several silicates, which were followed by some quantitative determinations by G. Steiger.[c] Micas, feldspars, leucite, nephelite, cancrinite, sodalite, spodumene, scapolite, and a number of zeolites were studied, and in every case a distinct solubility was observed. Apophyllite, natrolite, and pectolite gave remarkably strong alkaline reactions when moistened, but the intensity of the coloration produced with indicators gave inaccurate information as to the extent to which decomposition had occurred. Between the qualitative and the quantitative data there were discrepancies, which have been cleared up only within the last two years. A. S. Cushman,[d] in his work upon rock powders, has shown that when orthoclase is shaken with water an immediate extraction of alkaline salts takes place, but it is only a partial measure of the amount of decomposition. Colloidal substances, silica or aluminous silicates, are formed at the same time, which retain a portion of the separated alkali, but give it up to electrolytic solvents. For example, 25 grams of orthoclase were shaken up with 100 cubic centimeters of distilled water. The mixture was filtered, and the filtrate on evaporation gave 0.0060 gram of residue. With a 2 per cent solution of ammonium chloride a soluble residue of 0.0608 gram was obtained. With diabase 25 grams in pure water yielded an extract of 0.0064 solid residue; with a 1 per cent solution of ammonium chloride it gave 0.1412 gram. These gains do not imply increased decomposition, but only a liberation of the soluble compounds which had been entangled in the colloids that were formed at the same time. Any salt in solution is likely to affect in some such manner the apparent solubility of a rock or mineral, a conclusion which is in harmony with many observations upon the tendency of soils and clays to absorb salts, and especially salts of potassium, from percolating waters. As the latter change in composition, their decomposing and dissolving capacities are altered; and since the rocks differ in composition, no general rule can be laid down to determine what the effects of waters in any particular case will be.

Still, in spite of difficulties and uncertainties, we can trace the course of rock decomposition along several lines. The evidence, both as found by experiment in the laboratory and by field observations, shows that all minerals, certainly all of the important ones, are attacked

[a] Min. pet. Mitth., vol. 11, p. 319, 1890.
[b] Bull. U. S. Geol. Survey No. 167, p. 156, 1900.
[c] Idem, p. 159.
[d] U. S. Dept. Agric., Bureau of Chemistry, Bull. No. 92, 1905, and Office of Public Roads, Circular No. 38.

by water and carbonic acid. The pyroxenes and amphiboles yield most readily to waters, then follow the plagioclase feldspars, then orthoclase and the micas, with muscovite the most resistant of all. Even quartz is not quite insoluble, and the corrosion of quartz pebbles in conglomerates has been noted by several observers.[a] Among the commoner accessories, apatite and pyrite are most easily decomposed, magnetite is less attacked, and such minerals as zircon, corundum, chromite, ilmenite, etc., tend to accumulate with little alteration in the sandy rock residues. These minerals are not absolutely incorrodible, but they are nearly so. Corundum, for example, slowly undergoes hydration,[b] and is converted, at least superficially, into gibbsite or diaspore.

The effect of rain water upon a rock must now be divided into several phases. First, it partially dissolves the more soluble minerals, with liberation of colloidal silica, and the formation of carbonates containing lime, iron, magnesia, and the alkalies. The iron carbonate is almost instantly oxidized, forming a visible rusty coating or precipitate of ferric hydroxide. The lime, magnesia, and alkali salts remain partly in solution, to be washed away, together with much of the dissolved silica.

The character of the solution thus formed by the decomposition of feldspathic rocks has been investigated by W. P. Headden.[c] After prolonged treatment of orthoclase with water containing carbonic acid, he obtained a solution which, upon evaporation, yielded a residue carrying over 40 per cent of silica.

The second phase of the process is represented by a hydration of the undissolved residues. The feldspars are transformed into kaolin, the magnesian minerals into talc or serpentine, the iron, as we have seen, becomes essentially limonite, and the quartz grains are but little if at all changed. This double process of solution and hydration is accompanied by an increase of volume, which may or may not assist in effecting disintegration. On the surface, the weathered rock crumbles easily; but if the alterations have taken place at considerable depths, the pressure due to expansion may hold all the particles in place, and the rock will seem at a first glance to be unaltered. Such a rock, although apparently solid when it is first exposed to the air, rapidly falls to pieces and becomes a mass of sand and clay. This peculiarity was noted by G. P. Merrill[d] in certain granites of the

[a] See C. W. Hayes, Bull. Geol. Soc. America, vol. 8, p. 213, 1897; M. L. Fuller, Jour. Geol., vol. 10, p. 815, 1902; C. H. Smyth, Am. Jour. Sci., 4th ser., vol. 19, p. 282, 1905. For the solubility of quartz in solutions of borax or of alkaline silicates, see G. Spezia, Jour. Chem. Soc., vol. 78, pt. 2, p. 595, 1900; vol. 80, pt. 2, p. 605, 1901.

[b] S. J. Thugutt, Mineralchemische Studien, p. 104, 1901.

[c] Am. Jour. Sci., 4th ser., vol. 16, p. 181, 1903.

[d] Bull. Geol. Soc. America, vol. 6, p. 321, 1895.

District of Columbia, and by O. A. Derby[a] at railway cuttings in Brazil. In the latter case, the rocks, when first uncovered, were so hard that they were removed by blasting; but they soon underwent a sort of slacking process and crumbled away.

By solution, oxidation, and hydration, then, a solid rock is converted into an aggregate of loose material, which may remain in place as soil or be removed by the mechanical agency of running waters. As a rule the chemical processes are incomplete; some of the minerals are not entirely altered, and the loose products therefore exhibit many variations. In general terms, the streams separate the disintegrated materials into coarser and finer or lighter and heavier portions. The claylike substances are generally light and finely divided, and therefore remain longest in suspension. The heavier sands and gravels are not carried so far, and thus a separation is effected. In these coarser portions are found quartz, together with undecomposed fragments of the various minerals; the lighter silts are less variable in composition. Between silt and sand, however, there are all possible gradations, and a corresponding diversity is shown by the rocks that are formed by their reconsolidation. Mud, sand, and gravel yield shales, sandstones, and conglomerates; but there are sandy shales and argillaceous sandstones. The separations are sometimes fairly complete, but they are oftener imperfect. Swift waters are more effective than sluggish ones, both as regards promptness of action and the thoroughness of the separations. A mountain torrent becomes quickly turbid and quickly clear, while a river flowing through a flat alluvial country is rarely free from discoloration by suspended sediments. Much silt goes to the ocean; the coarser sands and gravels subside near the place of their origin. I speak now of stream deposits, but the sands of the seashore, which represent disintegration through the action of waves, follow similar rules. The gravelly portions are left highest on the beach, then come the sands, and the lighter particles are carried away to be laid down as oceanic ooze.

But rain water is not the only chemical agent for effecting rock decomposition. Below the surface the ground water is at work, and that contains an accumulation of the salts formed during the earlier stages of the process. It is poorer in oxygen than the surface waters, but richer in other substances, and it may contain a large proportion of organic matter derived from the decay of vegetation. This organic matter often reverses the oxidation which had previously taken place, reducing ferric to ferrous compounds and sulphates to sulphides. Pyrite, dissolved away from the surface rocks, may reap-

[a] Jour. Geol., vol. 4, p. 529, 1896. Holland (Quart. Jour. Geol. Soc., vol. 59, p. 64, 1903) mentions deep cuttings in India where the minute structure of the gneiss is retained on surfaces as soft as putty.

pear as marcasite elsewhere. Furthermore, the organic decomposition furnishes large amounts of carbonic acid to the ground water, and so increases its activity. At the surface ferrous salts have yielded the insoluble ferric hydroxide; in the soil, by reduction, the solubility is partly restored and in the form of ferrous bicarbonate the iron may be more or less washed away. When alkaline carbonates have been generated in the ground water its solvent power is increased, and it then becomes an effective agent in the solution and redeposition of silica.[a] The impregnation of any solution of alkaline salts by free carbonic acid yields a solvent of this kind. Ground water, then, is in many ways different from rain water. As the latter sinks deeper and deeper into a mass of rock or soil it undergoes progressive modifications, and some of the changes which it brought about at the beginning of its career may be reversed, while others are accentuated. At certain depths the decomposing action of the waters may cease almost entirely, when the process of cementation begins, and then new rocks are generated. The subject of reconsolidation, however, belongs in another chapter.

In volcanic regions the gaseous emanations play an important part in altering the rocks, and so, too, do the acid solfataric waters. In previous chapters these gases and waters have been sufficiently described, and their powerful solvent effects were noted.[b] Hot waters, charged with sulphuric or hydrochloric acid, attack nearly all eruptive rocks, dissolve nearly all bases, and leave behind, in many cases, mere skeletons of silica. This thorough disintegration of lavas, however, is only local, and has not the wide general significance of the gentler, less noticeable effects produced by rain.

EFFECTS OF VEGETATION.

Vegetation exerts a profound influence in the decomposition of rocks. Even if plants did no more than to retain moisture, making the rock beneath them damp, their action would be important; but that is only part of the story. The roots of plants penetrate into the crevices of the rocks, and as they expand by growth, they help mechanically in the work of disintegration.[c] The roots, moreover, commonly contain organic acids, which act with much vigor upon mineral substances. The soil or decomposed rock about the roots of a tree is often bleached by the solution and removal of its iron contents. The studies of H. Carrington Bolton[d] upon the solubility of min-

[a] See E. W. Hilgard, Am. Jour. Sci., 4th ser., vol. 2, p. 100, 1896. Hilgard suggests that the inclusions of carbon dioxide found in quartz may supply notable quantities of that substance to underground waters.

[b] In addition to previous references, see also W. B. Schmidt, Min. pet. Mitth., vol. 4, p. 1, 1882, on the action of sulphurous acid upon volcanic rocks.

[c] See A. Geikie, Text-book of Geology, 4th ed., p. 600, and G. P. Merrill, Rocks, Rock Weathering, and Soils, p. 201.

[d] *Ann. New York Acad. Sci.*, vol. 1, p. 1, 1877; vol. 2, p. 1, 1880.

erals in organic acids, and especially in citric acid, show how powerful this action must be. This acid decomposes many silicates, even at ordinary temperatures. Furthermore, plants take large amounts of mineral matter from the soil, which is returned to it in a different condition after the vegetation dies. Lichens, especially, extract substances directly from the rocks on which they grow; grass and grain crops absorb much potash, and so on. These substances are found in the ash when vegetable matter is burned, and are easily determinable by analysis.[a]

The number of organic acids which find their way into the soil, from one source or another, is quite considerable, and their action deserves a much more systematic investigation than it has yet received. Most important of all, on account of their abundance and general distribution, are the so-called humus acids, the products of vegetable decay. Humic, ulmic, crenic, and apocrenic acids are reputed members of this family of compounds, which are found wherever leaf mold accumulates or wood decays. Their constitution, in a modern chemical sense, is not well understood; but they are complex compounds, or even mixtures of compounds, of carbon, hydrogen, and oxygen, of uncertain formulæ, and they are produced by the breaking down of cellulose. Their solvent power is very appreciable, and they play an important part, not only in advancing the decomposition of rocks, but also in supplying a cement for certain varieties of hardpan, and in the deposition of bog-iron ore.[b] Through assimilation of nitrogen, azohumic acids are formed, and these, according to P. Thenard,[c] have the power of dissolving silica in considerable quantities. The corrosion of quartz pebbles, which has already been mentioned, is commonly ascribed to the action of azohumic acid; but the latter probably exerts its chief solvent effect upon the gelatinous or colloidal silica that is formed during the decomposition of silicates. The relative richness of tropical river waters in silica is also attributable to the action of the organic matter which they contain.[d]

INFLUENCE OF BACTERIA.

Even such low forms of life as the bacteria seem to exert a definite influence in the decomposition of rocks. A. Muntz[e] has found the decayed rocks of Alpine summits, where no other life exists, swarm-

[a] On this theme there are abundant data, which have been collected principally with reference to agricultural problems. A long table of ash analyses may be found in Jahresb. Chemie, 1847–48, p. 1074. For estimates of the amount of mineral matter taken from the soil by hemp and buckwheat, see R. Peter, Kentucky Geol. Survey, Chemical analyses, vol. A, p. 441, 1884.

[b] See A. A. Julien's monographic paper upon the geological action of the humus acids, Proc. Am. Assoc. Adv. Sci., 1879, p. 311. This memoir is rich in references to literature.

[c] Compt. Rend., vol. 70, p. 1412, 1870.

[d] See *ante*, p. 83.

[e] Ann. chim. phys., 6th ser., vol. 11, p. 136, 1887; Compt. Rend., vol. 110, p. 1370, 1890.

ing with the nitrifying ferment. The limestones and micaceous schists of the Pic du Midi, in the Pyrenees, and the decayed calcareous schists of the Faulhorn, in the Bernese Oberland, offer good examples of this kind. The organisms draw their nourishment from the nitrogen compounds brought down in snow and rain; they convert the ammonia into nitric acid, and that, in turn, corrodes the calcareous portions of the rocks. A. Stutzer and R. Hartleb[a] have observed a similar decomposition of cement by nitrifying bacteria. The effects thus produced at any one point may be small, but in the aggregate they may become appreciable. J. C. Branner,[b] however, has cast doubts upon the validity of Muntz's argument, and further investigation of the subject seems to be necessary. That microbes exert a great influence in the soil is beyond question. Apart from the effects produced by nitrification, the germs aid in bringing about the decomposition of organic matter, and in that way enormous quantities of carbon dioxide are generated. Furthermore, some species decompose sulphates,[c] and so modify the composition of the ground water.

INFLUENCE OF ANIMAL LIFE.

The influence of animal life in decomposing rocks is perhaps secondary rather than initiative. An ordinary soil contains rock-forming minerals which have been incompletely broken down, and animals assist in completing the disintegration. The effects produced by guano upon the rocks immediately beneath it may be more direct, but their distribution is exceedingly limited. On the other hand, burrowing animals bring fresh soil to the surface to be acted upon by rain, or blown away by winds; and ordinary earth worms perform this kind of labor upon a vast scale. In Brazil, as shown by J. E. Mills[d] and J. C. Branner,[e] the work done by ants is of the greatest significance. These creatures dig tunnels hundreds of yards long and carry into their nests great quantities of leaves. Through their vital processes they generate carbon dioxide, and the decay of the leaves must develop much more. The ants not only open up the soil to the action of air and water, they also help to saturate it with carbonic acid, and the solutions so produced, by the joint action of rain, respiration, and organic decay, penetrate to considerable depths below the surface. The decomposition of the underlying rocks is thus distinctly promoted, and over great areas of territory.

Before passing on to consider the products of decomposition, a word must be said upon the destructive influence of man. By drain-

[a] Zeitschr. angew. Chemie, 1899, p. 402.
[b] Am. Jour. Sci., 4th ser., vol. 3, p. 438, 1897.
[c] See *ante*, p. 87.
[d] Am. Geologist, vol. 3, p. 351, 1889.
[e] Bull. Geol. Soc. America, vol. 7, p. 255, 1896.

ing, grading, irrigating, fertilizing, and cultivating the soil, by tunneling, quarrying, and mining, the processes of rock decomposition are promoted in many ways. New surfaces of rock are exposed to the action of air and water, new solvents are introduced into the soil, coal is withdrawn from the earth to be restored to the atmosphere as carbon dioxide, and by the destruction of forests erosion is accelerated. The extent to which man assists in the decomposition of rocks may easily be overrated; but human influence is one of the active agencies which can not be ignored.

PRODUCTS OF DECOMPOSITION.

The products of decomposition are commonly divided into two great classes, the sedentary and the transported. The sedentary products are those which remain in place, such as residual clays; the transported materials are represented by glacial drift, river silt, wind-blown dust, etc. On the one hand we deal with substances derived from a single lithologic unit; on the other we have blended or assorted materials from various sources. Corresponding to these differences of origin there are chemical differences. First in order let us consider the sedentary products.

When a rock is decomposed in place, the changes produced are relatively simple. Soluble constituents are leached away and, to offset the loss, oxygen, water, and often carbon dioxide are gained. Ordinarily the gains exceed the losses, both in weight and in bulk, and the change may be either complete or partial. Every gradation is possible, from incipient alteration to the most thorough decomposition. The character of the products formed will depend upon the composition of the original rock, and also upon the nature of the decomposing agents. A normal granite, for example, will yield a mixture of quartz, kaolinite, and scales of mica, commonly commingled with fragments of undecomposed feldspar; a peridotite is converted into serpentine; a rock rich in iron is likely to give much ferric hydroxide, and so on. The more easily alterable minerals naturally form the more easily alterable rocks, and the residues which they furnish will represent the maximum amount of change. That change, furthermore, will be reflected in the composition of the percolating waters, which may be rich in silica, or carbonates, or sulphates, according to the nature of the minerals upon which they operate.

Many comparative analyses of rocks and their decomposition products are on record.[a] The following analyses, representing a few typical examples, are enough for present purposes:

[a] For a good general discussion of the data, see G. P. Merrill, Rocks, Rock Weathering, and Soils, pp. 206–240. See, also, papers by J. Lemberg, Zeitschr. Deutsch. geol. Gesell., vol. 27, p. 581, 1875; vol. 28, p. 519, 1876; vol. 35, p. 559, 1883. Other groups of analyses than those cited here are given by E. Kaiser, Zeitschr. Deutsch. geol. Gesell., vol. 56, Monatsb., p. 17, 1904; and M. Dittrich, Zeitschr. anorg. Chemie., vol. 47, p. 151, 1905.

Analyses of rocks and their decomposition products.

A. Micaceous granite, District of Columbia. Described by Merrill, Bull. Geol. Soc. America, vol. 6, p. 321, 1895. Contains quartz, black mica, feldspars, epidote, apatite, flakes of sericite, and a few black tourmalines and iron ores. a, The fresh rock; b, partly decomposed rock; c, derived soil; d, fine silt, separated from soil. Analyses a, b, c, by R. L. Packard; d by G. P. Merrill.

	A.			
	a.	b.	c.	d.
SiO_2	69.33	66.82	65.69	49.39
Al_2O_3	14.33	15.62	15.23	23.84
Fe_2O_3	.....	1.88	4.39	3.69
FeO	3.60	1.69		
MgO	2.44	2.76	2.64	4.60
CaO	3.21	3.13	2.63	4.41
Na_2O	2.70	2.58	2.12	3.36
K_2O	2.67	2.04	2.00	2.49
Ignition	1.22	3.27	4.70	8.12
TiO_2	undet.	undet.	.31	.....
P_2O_5	.10	undet.	.05	.....
	99.60	99.79	99.76	99.90

B. Micaceous gneiss, Albemarle County, Virginia. Analyses and description by G. P. Merrill, Bull. Geol. Soc. America, vol. 8, p. 157, 1897. The rock contains orthoclase, plagioclase, black mica, zircon, quartz, iron ores, apatite, garnets, and a zeolite. a, The fresh rock; b, the residual soil.

C. Elæolite syenite, Fourche Mountain, Arkansas. Described by J. F. Williams, Ann. Rept. Geol. Survey Arkansas, 1890, vol. 2, pp. 81–82. a, The fresh rock, analysis by W. A. Noyes; b, c, the decomposed rock, partial analyses by R. N. Brackett.

D. Augite-andesite, Rockland Ridge, Washington. Analyses, description and full discussion by E. A. Schneider, Am. Jour. Sci., 3d ser., vol. 36, p. 236, 1888. According to A. W. Jackson, the rock contains plagioclase, augite, apatite, magnetite, and residual glass. a, The fresh rock; b, the derived soil.

	B.		C.			D.	
	a.	b.	a.	b.	c.	a.	b.
SiO_2	60.69	45.31	59.70	58.50	50.65	50.85	58.16
Al_2O_3	16.89	26.55	18.85	25.71	26.71	12.54	15.03
Fe_2O_3	9.06	12.18	4.85	3.74	4.87	10.03	10.59
FeO						7.11	.....
MgO	1.06	.40	.68	trace	.21	5.57	1.99
CaO	4.44	trace	1.34	.44	.62	9.33	4.57
Na_2O	2.82	.22	6.29	1.37	.62	2.37	2.56
K_2O	4.25	1.10	5.97	1.96	1.91	1.13	1.68
Ignition	.62	13.75	1.88	5.85	8.68	.....	.....
H_2O	.....	.....	.....	.....	.....	.34	1.77
Organic	.....	.....	.....	.....	.....	.....	3.52
TiO_2	.....	.....	.....	.....	.06	.....	.....
P_2O_5	.25	.47	.....	.....	.....	.76	.43
SO_3	.....	.....	.....	.....	.....	.05	.07
	100.08	99.98	99.56	97.57	94.33	100.08	100.37

E. Diabase,[a] Medford, Massachusetts. Analyses and discussion by G. P. Merrill, Bull. Geol. Soc. America, vol. 7, p. 350, 1896. According to W. H. Hobbs the rock contains plagioclase, augite, biotite, pyrite, apatite, magnetite, ilmenite, and some secondary products. a, The fresh rock; b, disintegrated rock; c, fine silt.

F. Diorite, Albemarle County, Virginia. Described and analyzed by G. P. Merrill, Rocks, Rock Weathering and Soils, pp. 224, 225. Contains hornblende, plagioclase, and titanic iron. a, The fresh rock; b, decomposed rock.

[a] For data concerning a diabase from Chatham, Virginia, see T. L. Watson, Am. Geologist, vol. 22, p. 85, 1898. The analyses given are not complete.

	E.			F.	
	a.	b.	c.	a.	b.
SiO_2	47.28	44.44	36.61	46.75	42.44
Al_2O_3	20.22	23.19		17.61	25.51
Fe_2O_3	3.66	12.70	40.68	16.79	19.20
FeO	8.89				
MgO	3.17	2.82	4.02	5.12	.21
CaO	7.09	6.03	3.44	9.46	.37
Na_2O	3.94	3.93	2.14	2.56	.56
K_2O	2.16	1.75	1.82	.55	.49
Ignition	2.73	3.73	10.97	.92	10.92
P_2O_5	.68	.70	.....	.25	.29
MnO	.77	.52	.....	.....	.....
	100.59	99.81	99.68	100.01	99.99

G. Diabase, Spanish Guiana, Venezuela. Described by G. Attwood, Quart. Jour. Geol. Soc., vol. 35, p. 586, 1879. Analyses made in the Royal School of Mines, London. a, The fresh rock; b, weathered rock; c, highly weathered rock.

H. Diabase, Island of Jersey. Described by P. Holland and E. Dickson, Proc. Liverpool Geol. Soc., vol. 7, p. 108, 1892–93. a, The fresh rock; b, decomposed rock. Holland and Dickson also give data relative to the decomposition of a granite and a sandstone.

I. Augite diorite, Magnetberg, southern Urals. Described by J. Morozewicz, abstract in Zeitschr. Kryst. Min., vol. 39, p. 612, 1904. The rock alters, first by leaching, free iron oxides being dissolved and partly redeposited in crevices; second, by chloritization of the augite and production of garnet microlites; finally, by kaolinization of the feldspars. a, The fresh rock, specific gravity 2.988; b, first stage of decomposition, specific gravity 2.918; c, second stage, specific gravity 2.604.

	G.			H.		I.		
	a.	b.	c.	a.	b.	a.	b.	c.
SiO_2	49.57	41.77	43.46	43.56	44.93	46.97	50.42	47.22
Al_2O_3	15.37	19.34	18.39	14.58	16.27	16.16	16.72	20.09
Fe_2O_3	.....	13.21	20.43	3.84	13.37	10.66	4.32	5.51
FeO	12.34	4.63	.....	7.00	.....	4.38	2.70	2.02
MgO	7.41	5.01	3.46	9.95	6.40	4.56	3.77	4.39
CaO	9.65	4.98	2.37	10.78	1.84	9.02	13.36	6.93
Na_2O	1.99	.83	.14	1.86	2.03	4.47	4.24	2.56
K_2O	.85	.69	.59	1.02	.84	1.26	1.52	1.52
H_2O-	.17	2.55	3.39	3.85	12.55	1.74	2.24	8.78
H_2O+	3.10	7.30	7.95					
TiO_2	.....	.....	.....	1.03	1.34	.14	.07	trace
CO_2	.....	.....	.....	1.93	.....	.....	.....	.....
MnO	trace	trace	trace	.39	.28	.....	.....	.....
Mn_2O_3	.....	.....	.....	.....	.....	.75	.68	.66
	[a]100.45	[a]100.31	[a]100.18	99.79	99.85	100.11	100.04	99.68

[a] Including traces of Cu and S. P absent.

All of these comparative groups tell essentially the same story. Oxidation of the iron compounds, assumption of water, and loss of soluble bases by leaching are changes which can be recognized at a glance. The concentration of the slightly soluble alumina and ferric oxide in the residual substances is also clearly apparent. But the true magnitude of each alteration is not so easily seen. In some cases the changes appear to be small, when actually they are quite noteworthy. The apparent gains in alumina are only relative, and so, too, are all the other percentage variations. In order to determine the true alterations we must eliminate the disturbances due to oxidation and hydra-

tion, and this may be done either by examining molecular ratios or by assuming that one rock constituent is constant and comparing the others with it. The latter method is the most used and has been applied by Merrill to the several groups of analyses studied by him. Either ferric oxide or alumina is taken as invariable, and from that as a standard the relative losses of the other constituents can be roughly estimated. The process is not rigorously exact, but it gives a fair conception of what has really occurred. The alumina is not absolutely insoluble, but, relatively to the other bases, it is very nearly so.

For four of the rocks under consideration Merrill gives the following computations. The first table shows the percentage of each constituent lost by the original rock. The second table gives the percentage lost by each substance referred to its total amount as one hundred.

Results of decomposition of certain rocks.

I. PERCENTAGE OF ROCK LOST.

	Granite.	Gneiss.	Diabase.	Diorite.
SiO_2	10.50	31.90	8.48	17.43
Al_2O_3	.46	standard	standard	standard
FeO, Fe_2O_3	standard	1.30	2.42	3.53
MnO	.....	.....	.32	.....
MgO	.36	.80	.68	4.97
CaO	.81	4.44	1.83	9.20
Na_2O	.77	2.68	.50	2.17
K_2O	.85	3.55	.62	.21
P_2O_5	.04	.....	.08	.....
	13.79	44.67	14.93	37.51

II. PERCENTAGE LOSS OF EACH CONSTITUENT.

	Granite.	Gneiss.	Diabase.	Diorite.
SiO_2	14.89	52.45	18.03	37.31
Al_2O_3	3.23	standard	standard	standard
FeO, Fe_2O_3	standard	14.35	18.10	21.03
MnO	.....	.....	41.57	.....
MgO	1.49	74.70	21.70	97.17
CaO	25.21	100.00	25.89	97.30
Na_2O	28.62	95.03	12.83	84.87
K_2O	31.98	83.52	29.15	38.75
P_2O_5	40.00	.....	11.39	19.87

From these figures we can see more clearly what has happened to each rock, but we can not compare the four columns with one another. There are still too many variables. The rocks contain different minerals, they have weathered with varying completeness, and they were not exposed to the same percolating waters. Furthermore, weathering is affected by the texture of a rock, and a compact feldspar will change less readily than one which is full of crevices. Coarseness or fineness is another factor to be taken into account. In short, the quantities are incommensurable and no general rules,

except as to the main tendencies to alteration, can be based upon them. Each individual rock alters in accordance with the conditions to which it has been exposed, but the general trend of the changes is always in the same direction. Lime is always removed, but percolating waters rich in carbonic acid will carry it away more easily than waters less heavily charged. Olivine will lose magnesia more readily than enstatite. The solubility of silica will vary with variations in the leaching agent. Material withdrawn at one point may be redeposited at another. Local and temporary conditions meet us at every turn; so that although we can tell, in broad, general terms, how a given rock will change, we can not predict the alteration in its quantitative details.

RATE OF DECOMPOSITION.

The extent to which rocks undergo decomposition within a given time is largely dependent upon climatic circumstances. In the polar regions, where waters are frozen during a great part of the year, solution goes on more slowly than in warmer climates. In the Tropics the waters not only act continually, but their energy is increased by their higher temperatures. Frost is most effective as an agent of disintegration in climates where alternations of freezing and thawing are most frequent. As E. W. Hilgard[a] has well said, "The chemical processes active in soil formation are intensified by high and retarded by low temperatures, all other conditions being equal." Disintegration, however, as distinguished from decay, is very active in high latitudes and also in arid regions.[b] In both cases the great alternations of heat and cold promote disintegration, whereas, for lack of flowing water, solution and erosion are retarded. In an arid region the diurnal variations of temperature are extreme, and inequalities of expansion among the minerals of a rock produce their maximum effects. Furthermore, the dust and sandstorms of a desert advance the disintegrating process. The rocks are ground to powder, but much of the débris remains in place and loses comparatively little by leaching. In humid climates erosion and solution go on together, and an abundance of vegetable matter, living or dead, helps to hasten the decomposition of the rock-forming silicates. Between soils of arid and moist climates there are striking differences of composition, as Hilgard[c] has clearly shown by means of the following averages. Under A is given the average composition of 466 soils from the humid regions of the Southern States. B represents the average of 313 soils from the arid areas of California, Washington, and Montana.

---

[a] Report on the relations of soil to climate: Bull. No. 3, U. S. Weather Bureau, 1892.

[b] See I. C. Russell, Bull. Geol. Soc. America, vol. 1, p. 135, 1890. Also compare G. P. Merrill, Rocks, Rock Weathering, and Soils, pp. 278, 285.

[c] Op. cit., p. 30.

Average composition of soils from humid and arid regions.

	A.	B.
Insoluble in HCl	84.031	70.565
Soluble SiO_2	4.212	7.266
Al_2O_3	4.296	7.888
Fe_2O_3	3.131	5.752
Mn_3O_4	.138	.059
MgO	.225	1.411
CaO	.108	1.362
Na_2O	.091	.264
K_2O	.216	.729
P_2O_5	.113	.117
SO_3	.052	.041
Water and organic matter	3.644	4.945
	100.252	100.399

That a much greater proportion of soluble matter, unremoved by leaching, is present in the arid regions is evident at a glance. The desert soils, when supplied with water, are exceptionally fertile, because they have retained in a large measure the foods that plants require.

KAOLIN.

The chemical products of rock decomposition are extremely varied, as might be naturally inferred from the mineralogical complexity of the original masses. In the residues which remain after leaching we find free silica, either as quartz or opal, fragments of various undecomposed minerals, hydroxides, and a number of the rather indefinite substances known as clays. Among the latter kaolinite, $H_4Al_2Si_2O_9$, and its ferric equivalent, nontronite, $H_4Fe_2Si_2O_9$, are perhaps the most important.[a] These species occur admixed with one another and also with other hydrous silicates, opaline silica, and hydroxides. Kaolinite is a very stable compound, but nontronite is easily decomposed, either by acid or alkaline solutions, yielding a ferric hydroxide, limonite, as a final product of aqueous action. According to Weinschenk, mixtures of kaolinite and nontronite are sometimes found, in which the structure of the original gneiss is plainly to be discerned. That kaolinite is the chief residual product of feldspathic decay is the commonly accepted view, but some writers hold that it is not formed by ordinary weathering. According to H. Rösler,[b] kaolinite is only produced by pneumatolytic action—that is, by the operation of thermal waters and gaseous emanations. The other hydrous silicates of aluminum and iron, such

[a] The equivalency between kaolinite and nontronite was established by E. Weinschenk, Zeitschr. Kryst. Min., vol. 28, p. 150, 1897.

[b] Neues Jahrb., Beil. Bd. 15, p. 231, 1902. Rösler gives a bibliography relative to kaolinization, embracing 303 titles. See also O. Stutzer, Zeitschr. prakt. Geol., 1905, p. 333, who accepts Rösler's view. E. Wüst, studying a kaolin derived from quartz porphyry, near Halle, Germany, regards the alteration as due to the action of humus acids. See Zeitschr. prakt. Geol., 1907, p. 19. On the constitution of the clay silicates see H. Le Chatelier, Zeitschr. physikal. Chemie, vol. 1, p. 396, 1887.

as halloysite, cimolite, pyrophyllite, etc., are of more or less uncertain origin. Probably different crystalline silicates yield different residues of this ill-defined class, and any or all of them may exist in residuary clays.

LATERITE AND BAUXITE.

In tropical and subtropical regions the processes of rock decay are often carried further than is usually the case within the temperate zones. The leaching is more complete, the silicates are more thoroughly decomposed, and the residues are richer in hydroxides. In India, for example, large areas are covered by a red earth known as laterite, which in some cases is undoubtedly a derivative in place of preexisting rocks, such as granite, gneiss, basalt, or diorite. In other cases the laterite is detrital in character and far distant from its place of origin. The term has been vaguely used, and as employed by different writers it has meant very different things. It has been applied to ferruginous clays, sediments, beds of iron ore, and products of volcanic action, and its formation has been attributed to a variety of causes.[a] W J McGee[b] compares laterite with the ferruginous clays and soils of the upper Mississippi, and F. R. Mallet[c] regards the iron ores associated with the basalts of Ulster as having a lateritic character. W. Maxwell,[d] describing the red soils of the Hawaiian Islands, which are derived from lavas by the action of volcanic acids, points out their similarity to laterite. T. H. Holland[e] suggests that lateritization may be due, in part at least, to the activity of bacilli or other micro-organisms which could live in a warm climate but not in colder regious. J. Walther[f] and S. Passarge[g] call attention to the relatively large proportion of nitric acid in rainfall during tropical thunderstorms, and regard it as a possible agent of lateritization. Brought to the surface of a decomposing rock, it might extract the iron as ferric nitrate, and that compound is either easily hydrolyzed or else precipitated by alkaline carbonates. In short, similar products may have been formed in several different ways, and identity of composition does not always imply identity of origin. Whatever its derivation may be, whether

[a] See R. D. Oldham, Manuel of the Geology of India, 2d ed., pp. 348–370, 1893. P. Lake (Mem. Geol. Survey India, vol. 24, pt. 3, pp. 17–46, 1890) gives a good summary of earlier views upon the origin of laterite. Another elaborate summary is presented by G. C. Du Bois, Min. pet. Mitth., vol. 22, pp. 4–18, 1903.

[b] Geol. Mag., 1880, p. 310.

[c] Rec. Geol. Survey India, vol. 14, p. 139, 1881.

[d] Lavas and Soils of the Hawaiian Islands, Honolulu, 1898. Maxwell gives many analyses of decomposition products derived from lava, both by volcanic action and by normal weathering.

[e] Geol Mag., 1903, p. 59.

[f] Verhandl. Gesell. Erdkunde, vol. 16, p. 318, 1889.

[g] Rept. Sixth Internat. Geog. Cong., London, 1895, p. 671.

from rocks in place or as a transported sediment, true laterite is essentially a mixture of ferric hydroxide, aluminum hydroxide, and free silica in varying proportions. To laterite in situ this statement applies very closely; detrital laterite is usually contaminated by admixtures of clay. Just as in the formation of kaolin, the process of lateritization may be complete or partial; the typical product appears only when the alteration of the parent rock has gone on to the end. Then the silicates seem to be completely broken down, whereas in kaolinization a stable, hydrous silicate remains. In one case we have silica plus free hydroxides, in the other silica plus kaolin.

In India laterite may be derived from various rocks, and in some cases its source has been in beds of volcanic ash. According to P. Lake,[a] the laterite of Malabar is produced in situ from gneiss. M. Bauer[b] has described "granite laterite" and "diorite laterite" from the Seychelle Islands; in Surinam, according to G. C. Du Bois,[c] its usual parent is diabase; in the Hawaiian Islands it is formed from recent lavas.[d] There are a good many analyses of laterite, some of them relating to samples of known origin, others to detrital material. For example, Bauer gives these two analyses by K. Busz of laterite from the Seychelles:

Analyses of laterite.

	Granite laterite.	Diorite laterite.
SiO_2	52.06	3.88
Al_2O_3	29.49	49.89
Fe_2O_3	4.64	20.11
H_2O	14.40	25.98
	100.59	99.86

If from these mixtures we deduct the silica as quartz, the remainder will approximate to the general formula RO_3H_3, which is that of gibbsite. The water, however, is a little too low, and a careful reduction of the data leads to the supposition that the residual substance is a mixture of gibbsite, AlO_3H_3; diaspore, AlO_2H, and limonite, $Fe_4H_6O_9$. In short, laterite is identical in type with bauxite, and is merely an iron-rich variety of the latter. Between the aluminous bauxite and the iron compound limonite, all sorts of mixtures may occur.

[a] Mem. Geol. Survey India, vol. 24, pt. 3, p. 17, 1890. M. Maclaren (Geol. Mag., 1906, p. 536) regards the Indian laterite as formed, not directly in situ, but by replacement of soil or decomposed rock by deposits from mineralized solutions. The latter he attributes to subterranean decomposition of silicates by carbonated waters.

[b] Neues Jahrb., 1898, pt. 2, p. 192.

[c] Min. pet. Mitth., vol. 22, p. 1, 1903. Du Bois gives several analyses of laterite.

[d] Maxwell, Lavas and Soils of the Hawaiian Islands. C. Klement (Min. pet. Mitth., vol. 8, p. 26, 1886) gives two analyses of laterite from the Congo River in West Africa.

From this point of view the analyses of Indian laterite published by H. and F. J. Warth[a] are peculiarly instructive. A represents gibbsite, B a bauxite, and C, D, E, and F laterite, found in situ.

Analyses of gibbsite, bauxite, and laterite.

	A.	B.	C.	D.	E.	F.
Quartz	.....	.....	.....	.....	10.52	.....
SiO_2	2.78	0.93	3.90	0.37	.23	0.90
Al_2O_3	62.80	67.88	54.80	43.83	35.38	26.27
Fe_2O_3	.44	4.09	13.75	26.61	34.27	56.01
MgO	.03	.....	.....	.....	.....	.20
CaO	.20	.36	.35	.86	.40	.64
TiO_2	.04	1.04	.38	4.45	.10	1.59
H_2O	33.74	26.47	26.82	23.88	19.00	14.39
	100.03	100.77	100.00	100.00	100.00	100.00

The following analyses (G to J) represent detrital laterites:

Analyses of detrital laterites.

		G.	H.	I.	J.
Quartz		6.67	4.53	39.53	24.39
Kaolinite		28.77	50.26	17.16	20.22
Balance, identical with bauxite	Al_2O_3	15.40	11.86	9.58	.....
	Fe_2O_3	41.50	28.99	28.38	47.39
	MgO	none	none	.....	trace
	CaO	none	none	.....	.38
	TiO_2	.25	.43	.01	.01
	H_2O	7.41	3.93	5.34	7.61
		100.00	100.00	100.00	100.00

Between bauxite and laterite there is no dividing line, and the one shades into the other. The detrital laterites differ from those in situ merely in having taken up sand and clay during their transportation from one point to another. The bauxite itself, if we restrict that term to the dominantly aluminous varieties, is probably a mixture of the two hydrates, corresponding to gibbsite and diaspore, the latter compound, however, like the gibbsite, being in an amorphous condition. Crystallized gibbsite or hydrargillite is comparatively rare.

Bauxite, like laterite, occurs under a variety of conditions, which suggest a dissimilarity of origin. Its formation has been explained in various ways, but no one theory seems to fit all cases.[b] The French bauxites are found mostly associated with Cretaceous rocks,[c] and they

[a] Geol. Mag., 1903, p. 154. Only a selection from among a large number of analyses can be given here. See also H. Warth, Min. Mag., vol. 13, p. 172, 1902, for a description of Indian gibbsite, and L. L. Fermor, Rec. Geol. Survey India, vol. 34, p. 167, 1906, on gibbsite and manganese ores in laterite.

[b] See T. L. Watson, Bull. No. 11, Geol. Survey Georgia, 1904, for a good summary of the literature of bauxite, and a bibliography.

[c] See H. Coquand, Bull. Soc. géol. France, 2d ser., vol. 28, p. 98, 1870. Augé, idem, 3d ser., vol. 16, p. 345, 1880. F. Laur, Trans. Am. Inst. Min. Eng., vol. 24, p. 234, 1894.

have been interpreted by several writers as deposits from hot springs or other thermal waters.[a] S. Meunier, for example, regards bauxite as precipitated alumina thrown down by the action of calcium carbonate upon solutions of aluminic salts. Hot waters, rising from considerable depths, are supposed to have dissolved alumina from the rocks and brought it into the region of limestones. The fact that certain French bauxites rest upon corroded limestones gives a plausibility to Meunier's suggestion. This mode of occurrence, however, is not general.

In several German localities bauxite is found, like laterite, as a direct residue from the decomposition of basalt.[b] The bauxite in some cases shows the structure of the original rock. Augé[c] observed bauxite at one locality in Auvergne resting on gneiss and partly overlaid by basalt. In Ireland G. A. J. Cole[d] has described bauxite which was apparently derived from rhyolite or rhyolitic ash, and one decomposing rhyolite was found to contain a considerable proportion of alumina soluble in hot sulphuric acid. Cole supposes that the lavas were first attacked by acid vapors and that the alumina so dissolved was precipitated by waters containing alkaline carbonates. G. H. Kinahan,[e] however, describing other Irish localities where the bauxite is associated with iron ores, suggests that the mineral was formed by the leaching action of organic matter, derived from superincumbent peat, upon ferruginous clays.

In the United States the chief deposits of bauxite are found in Georgia, Alabama, and Arkansas. The Georgia-Alabama field has been principally described by J. W. Spencer,[f] H. McCalley,[g] C. W. Hayes,[h] and T. L. Watson.[i] Spencer regards the bauxite as a deposit from lagoons, and calls attention to its evidently common genesis with ores of manganese and iron. Hayes notes its association with

[a] See Coquand and Augé, as just cited; also S. Meunier, Compt. Rend., vol. 96, p. 1737, 1883; Bull. Soc. géol. France, 3d ser., vol. 17, p. 64, 1888. Augé argues from an erroneous datum relative to supposed bauxite formed by geysers in the Yellowstone National Park. F. Parmentier (Compt. Rend., vol. 115, p. 125, 1892) has called attention to the occurrence of alumina in mineral waters.

[b] See A. Streng, Zeitschr. Deutsch. geol. Gesell., vol. 39, p. 621, 1887. A. Liebrich, Inaug. Diss., Zurich, 1891. T. Petersen, Ber. XXVI. Vers. Oberrhein. geol. Vereins, p. 38, 1893. J. Lang, Ber. Deutsch. chem. Gesell., vol. 17, p. 2892, 1884. R. Delkeskamp, Zeitschr. prakt. Geol., 1904, p. 306. Köbrich, idem, 1905, p. 23. H. Münster, Inaug. Diss., Giessen, 1905, on laterite-bauxite deposits in the Vogelsgebirge. On Hungarian bauxite, see J. von Szádeczky, Földt. Közl., vol. 35, p. 247, 1905.

[c] Loc. cit.

[d] Trans. Roy. Dublin Soc., 2d ser., vol. 6, p. 105, 1896.

[e] Trans. Manchester Geol. Soc., vol. 22, p. 458, 1894. In the same volume, p. 524, analyses of Irish bauxites by W. Pelle are given, and there is still another paper on the subject by G. G. Blackwell, p. 525. The analyses show large admixtures of titanic oxide in the bauxite.

[f] Geol. Survey Georgia, 1893, The Palæozoic group, p. 214.

[g] Geol. Survey Alabama, 1897, pt. 2.

[h] Sixteenth Ann. Rept. U. S. Geol. Survey, pt. 3, p. 547, 1895. See also Trans. Am. Inst. Min. Eng., 1894, p. 243.

[i] Bull. No. 11, Geol. Survey Georgia, 1904.

gibbsite, halloysite, and kaolin, and attributes its formation to heated ascending waters, which have decomposed pyrite in the underlying shales. Aluminous solutions were thus brought to the surface, to be precipitated by carbonate of lime. A similar intervention of sulphates has been suggested by A. Liebrich [a] and others. The occurrence of bauxite in immediate association with alunogen on the upper Gila River, in New Mexico, as reported by W. P. Blake,[b] gives added emphasis to this suggestion. The alteration of rhyolite to a quartz-alunite and a quartz-diaspore rock in the Rosita Hills, Colorado, described by W. Cross,[c] may also have some bearing upon the problem. As for the Georgia-Alabama bauxite, its composition, as shown by many analyses, approximates to that of gibbsite.[d] The latter species, it may be observed, was prepared synthetically by A. De Schulten,[e] by passing a current of carbon dioxide through a hot alkaline solution of aluminum hydroxide. Distinct crystals of gibbsite were thus obtained.

The bauxite of Arkansas has been studied by J. F. Williams,[f] J. C. Branner,[g] and C. W. Hayes.[h] According to all of these observers, it is found in Tertiary areas near eruptive syenites, and there are no limestones in its neighborhood. Hayes describes two varieties of the bauxite; one, granitic in character, shows the structure of the syenites from which it was probably derived; the other form is pisolitic and may be a secondary generation. At some points, according to Branner, the bauxite contains so much iron that attempts have been made to work it as an iron ore. The granitic bauxite seems to represent a decomposition of the syenite in place; the pisolitic variety was perhaps precipitated from solution. All three authorities agree in tracing the origin of the bauxite to the action of waters, which Hayes thinks were strongly saline or alkaline, upon the heated syenites; but they differ as regards the details of the process. One of the Arkansas deposits is near Fourche Mountain, and it is interesting to recall the fact that that is a locality for elæolite syenite. Both gibbsite and diaspore are known as decomposition products of elæo-

[a] Zeitschr. prakt. Geol., 1897, p. 212.

[b] Trans. Am. Inst. Min. Eng., vol. 24, p. 573, 1894.

[c] Seventeenth Ann. Rept. U. S. Geol. Survey, pt. 2, p. 314, 1896. A quartz-alunite rock in California has been described by H. W. Turner, Am. Jour. Sci., 4th ser., vol. 5, p. 424, 1898.

[d] See W. B. Phillips and D. Hancock, Jour. Am. Chem. Soc., vol. 20, p. 209, 1898. Admixtures of kaolin, halloysite, and sand were noted. See also Watson's bulletin, loc. cit., and A. E. Hunt, Trans. Am. Inst. Min. Eng., vol. 24, p. 855, 1894. Titanic oxide is almost invariably present, in some cases reaching as high as 9.80 per cent. It also appears in the foreign bauxites already mentioned, and in the Italian bauxites described by C. Formenti, Gazz. chim. ital., vol. 32, pt. 1, p. 453, 1902.

[e] Bull. Soc. Min., vol. 19, p. 157, 1896.

[f] Ann. Rept. Geol. Survey Arkansas, 1890, vol. 2, p. 124.

[g] Jour. Geol., vol. 5, p. 263, 1897. This review contains a bibliography of bauxite, and references to earlier papers by Branner.

[h] Twenty-first Ann. Rept. U. S. Geol. Survey, pt. 3, p. 435, 1901.

lite and sodalite,[a] and it is conceivable that the two last-named species may have been the parents of the bauxite here. Like the Georgia bauxite, the Arkansas mineral approximates to gibbsite in composition. It also contains notable amounts of titanium.

Although many writers have regarded bauxite as a distinct mineral species, having the empirical formula $Al_2O_3.2H_2O$, few samples of it have exactly that composition. It is usually intermediate between diaspore, $Al_2O_3.H_2O$, and gibbsite, $Al_2O_3.3H_2O$; but is sometimes near one and sometimes near the other. It seems, in fact, to be a mixture of the two hydrates, but in an amorphous condition.[b] When solutions of sodium aluminate are decomposed by carbon dioxide, only the trihydrate is thrown down, at least so far as crystalline products have been observed.[c] The ordinary, precipitated, gelatinous hydroxide has the same composition, according to E. T. Allen;[d] but at 100° it loses water and becomes a dihydrate. The latter, in moist air, regains water readily—an order of change which renders its occurrence on a large scale as a natural mineral highly improbable. Even if a dihydrate were formed, it would speedily be altered into something more nearly resembling gibbsite. In the colloidal form, the trihydrate often contains large quantities of entangled water, a fact which accounts for many discordant observations. According to J. M. van Bemmelen[e] this form can pass over into the crystalline modification and the latter in turn may become amorphous. The colloidal variety dissolves to a greater or less extent in water, but is readily precipitated from its very unstable solutions. Precipitated alumina often contains appreciable quantities of carbonates, but whether they are chemically combined or not is very uncertain. The basic carbonates of aluminum described by various authors are substances of doubtful character, and it is therefore not desirable to invoke their aid in the interpretation of geological phenomena. This statement, however, needs qualification. One basic carbonate of aluminum and sodium, the rare mineral dawsonite, is known to exist; but its genesis is undetermined. Although rare as a recognizable substance, it may be common as a diffused ingredient of soils; but this is only a possibility. There is no evidence upon which to base the supposition. Free alumina, or its hydrate, is found in soils, espe-

[a] See S. J. Thugutt, Neues Jahrb., Beil. Bd. 9, p. 609, 1895. Also W. C. Brögger, Zeitschr. Kryst. Min., vol. 16, p. 50, 1890.

[b] On the hydration of bauxite, see also H. Lienau, Chem. Zeitung, 1905, p. 1280; and T. H. Holland, Rec. Geol. Survey India, vol. 32, p. 175, 1905. Holland gives analyses, and in one of them the TiO_2 reaches 12.21 per cent.

[c] See De Schulten, already cited. Also F. Russ, Zeitschr. anorg. Chemie, vol. 41, p. 216, 1904, for recent experiments and a summary of the work done by earlier investigators.

[d] Chem. News, vol. 82, p. 75, 1900. On this subject there is a voluminous literature, and the published data are very discordant.

[e] Rec. trav. chim., vol. 7, p. 75, 1888. Zeitschr. anorg. Chemie, vol. 18, p. 132, 1898.

cially in the Tropics. T. Schlösing,[a] on comparing French soils with soils from Madagascar, found the latter to contain much free alumina, while in France there appeared to be chiefly, if not exclusively, silicates. Similar observations were made by J. M. van Bemmelen [b] on volcanic soils from Java and Sumatra, in which free hydroxides of iron and aluminum are abundant; and W. Maxwell's study of Hawaiian soils [c] leads to the same conclusions. In these cases the bauxite or laterite substance is diffused instead of being concentrated. It is therefore less easily recognized, but its nature is the same as if it were assembled or segregated in distinct beds.

Taking all of the evidence into account, it seems clear that bauxite may be formed by more than one process. It occurs in place, like laterite, as a residue from the decomposition of rocks; it is found also, apparently, as a precipitate, and sometimes, like any other product of disintegration, it is in beds which represent transported material. In the last instance it is contaminated by mixture with sand and clay. Even in its residual or primary occurrence, its impurities are significant, for they show a concentration of the insoluble portions of the original rock. The titanium, for example, which was first observed in bauxite by H. Sainte-Claire Deville,[d] is such a product of condensation; and it is found, not only in bauxite, but in nearly all residual clays.

The processes by which aluminous silicates are transformed into hydroxides have not been determined with certainty. We have only probabilities to guide us. It is most likely that in many cases the formation of acid solutions by oxidation of pyrite is the first step in the alteration; they dissolve alumina from the rocks to yield it up again upon mixture with alkaline solutions or solutions of calcium carbonate. In the latter case gypsum would also be formed and then leached away. The precipitation might occur in place, almost contemporaneously with the formation of the aluminous solutions, or the dissolved matter could be carried some distance before deposition. Since colloidal alumina is soluble in water, it might be transported to a considerable distance before coagulation occurred. The solution of alumina from the rock-forming silicates would of course be accompanied by a liberation of silica in a colloidal or finely divided form, which could dissolve readily in the organic matter or humus acids of the ground waters, and so be re-

[a] Compt. Rend., vol. 132, p. 1203, 1901. According to K. Glinka (Zeitschr. Kryst. Min., vol. 32, p. 79, 1900), kaolin commonly contains admixtures of aluminum hydroxide, sometimes as diaspore, sometimes apparently bauxite.

[b] Zeitschr. anorg. Chemie, vol. 42, p. 265, 1904.

[c] Lavas and Soils of the Hawaiian Islands.

[d] Ann. chim. phys., 3d ser., vol. 61, p. 309, 1861. Deville also found vanadium in bauxite. See also the references to analyses of bauxite previously cited.

moved. The common occurrence of laterite, bauxite, and soils containing them, in tropical countries, may be partly accounted for in this way, for organic matter is there especially abundant, and its products of decomposition are conspicuous. In volcanic regions, of course, as in Java, Sumatra, and Hawaii, the acid emanations from volcanoes doubtless play an important part in the decomposition of the silicates and the solution of alumina.

The agency of thermal and atmospheric waters, separately or conjointly, must also be considered with reference to the formation of bauxite. E. Kaiser,[a] studying the alteration of German basalts, supposes that carbonated waters first transform the aluminous silicates into hydrous compounds, from which, by alkaline solutions, the alumina is thrown down; that is, the process consists of two stages, an intermediate hydrated silicate being first formed. Kaolinite is such a silicate, but it is insoluble, and the change ends with its formation. Possibly halloysite, which has the composition of kaolinite plus water, but which is decomposed by acids, is such an intermediate compound. The association of halloysite with the Georgia bauxite is suggestive of this possibility; but alternatives, such as the formation of zeolites, must also be taken into account. Any relatively soluble or unstable silicate of aluminum [b] would fulfill the conditions required by Kaiser's hypothesis. The latter has value only as a suggestion, and it remains to be seen whether it is possible to trace the transformation of an igneous rock into bauxite through all of its stages. So far, that has not been done.

By dehydration, bauxite passes into emery. Emery, therefore, may be regarded as the metamorphic equivalent of bauxite.[c]

ABSORPTION.

In any study of the phenomena attending rock decomposition it is important to note that the leached products can regain some of the substances which they have lost. Clays, soils, and other finely divided mineral matter can extract acids, bases, and salts from percolating solutions and in doing so they act selectively. As a rule a soil will take up potash more readily than lime, magnesia, or soda, and retain it tenaciously. This absorption of potassium compounds was long ago observed by J. T. Way,[d] and the phenomenon has since been

[a] Zeitschr. Deutsch. geol. Gesell., vol. 56, Monatsb., p. 17, 1904.

[b] It is possible that some of the supposed hydrous silicates of aluminum which have been described are merely mixtures of colloidal silica and colloidal alumina. This point is one which needs careful investigation.

[c] See A. Liebrich, Zeitschr. prakt. Geol., 1895, p. 275.

[d] Jour. Roy. Agric. Soc. England, vol. 11, p. 313, 1850; vol. 13, p. 123, 1852.

studied by many observers. R. Warington [a] found that hydroxides of iron and aluminum, and preferably the former, were especially active as absorbents, and most so in presence of calcium carbonate. That is, the last-named compound converted other alkaline salts into carbonates, which were more easily absorbed. J. Lemberg's papers [b] upon the alteration of silicates are rich in data illustrating the reactions which occur during absorption. The cases studied by Lemberg are of the nature of double decompositions, in which a silicate loses one base to a solution only to take up another. The recent investigations by M. Dittrich [c] relate to changes of the same order. Saline solutions were made to act upon decomposed rocks and their changes in composition were observed.

Double decomposition, however, is not the only process to be considered in this connection. Warington's experiments point directly to an absorption of colloids, namely, the colloidal hydroxides of iron and alumina. According to J. M. van Bemmelen,[d] those "hydrogels," as they are called, together with similar hydrogels of manganese and copper oxides, show a marked absorptive power for salts of the alkalies and alkaline earths. There are also colloidal complexes of ferric and aluminic silicates, and of humus, which act in the same way. These substances act, first, as absorbents, in some manner which is not clearly understood; and the salts which they take up can react later with various saline solutions by double decomposition. When the colloids pass over into crystalline substances, they lose in great measure their absorptive capacity. It has also been shown by Van Bemmelen [e] that plastic clays have the greatest efficiency as absorbents of water, nonplastic clays being inferior in this respect. It is now generally believed that the plasticity of a clay is due to the colloid substances which it happens to contain. This supposition was clearly stated by T. Schlösing [f] as long ago as 1888, and advocated later by P. Rohland.[g] It has recently been developed more fully by A. S.

[a] Jour. Chem. Soc., vol. 21, p. 1, 1868.

[b] See especially the memoir in Zeitschr. Deutsch. geol. Gesell., vol. 28, p. 519, 1876.

[c] Mitth. Gr. Badisch. geol. Landesanstalt, vol. 4, p. 339, 1903; Zeitschr. anorg. Chemie, vol. 47, p. 151, 1905. The two papers cover the same ground in part, but are not absolutely identical. A later paper by Dittrich is in Mitth. Bad. Landesanstalt, vol. 5, p. 1, 1907. See also J. Dumont, Comp. Rend., vol. 142, p. 345, 1906, on the decomposition of potassium carbonate by clay, etc., and O. Schreiner and G. H. Failyer, Bull. No. 32, Bureau of Soils, U. S. Dept. Agric., 1906, on the absorption of phosphoric acid and potash by soils.

[d] Zeitschr. anorg. Chemie, vol. 23, p. 321, 1900. See especially pp. 358 and 364. An earlier paper by Van Bemmelen in Landw. Versuchs-Station., vol. 21, p. 135, should also be noted.

[e] Zeitschr. anorg. Chemie, vol. 42, p. 314, 1904.

[f] Chimie agricole, in Fremy's Encyclopédie chimique, p. 67.

[g] Zeitschr. anorg. Chemie, vol. 41, p. 325, 1904.

Cushman,[a] whose experiments upon the binding power of road-making materials are apparently conclusive.[b]

The complete disintegration of a rock is commonly followed by a removal of the fragmentary material from its original site. The transported products are much more abundant than the sedentary. This transportation may be effected in various ways—by flowing streams, by glacial ice, or by winds—and it is accompanied to a certain extent by a separation of the rock residues into substances of different kinds. A stream deposits its load first as coarse gravel, then as sand, and finally, often with extreme slowness, as silt or clay. The gravel consists merely of fragments, more or less rounded, of the original rock or of its larger inclusions. The sand contains finer particles of undecomposed minerals, with quartz usually predominating. The silt is composed largely of decomposition products, such as kaolinite, hydroxides of iron or aluminum, and the like. These substances shade into one another, and their exact nature in any specific case will depend upon the thoroughness with which the primary decomposition was effected and upon mechanical factors such as the velocity of the stream.

SAND.

The term "sand" is vaguely employed to denote very different substances. Volcanic sand, for example, is finely divided lava or lava spray; coral or shell sand is made up of broken corals and shells, and so on. Even if we restrict the use of the word, for present purposes, to the granular products of rock decomposition we shall find that we have many dissimilar bodies to deal with. Quartz and feldspar are the commonest minerals in the rocks; hence quartz and feldspar fragments are the chief constituents of river sands. But the feldspars are largely decomposed, and therefore the sands represent most frequently a concentration of the more stable quartz. Sands also contain the other rock-forming minerals, and these may be either disseminated throughout the larger deposits or segregated behind bars or in hollows by the action of gravity. The black sands of many well-known localities represent concentrations of heavy and slightly alterable minerals, such as magnetite, ilmenite, chromite, etc. The gem gravels of Ceylon, the monazite sands of North Carolina and Brazil, and similar segregations of tinstone all

[a] Bulls. No. 85, 1904, and No. 92, 1905, Bureau of Chemistry, U. S. Dept. Agric., and Trans. Am. Ceramic Soc., vol. 6, 1904. Cushman cites several other authorities than those mentioned here.

[b] See also F. E. Grout, Jour. Am. Chem. Soc., vol. 27, p. 1037, 1905. Grout admits that colloids may assist in producing plasticity, but thinks that "molecular attraction" is a more important cause. A paper by R. Lucas on the physical properties of clays appears in Centralbl. Min. Geol. Pal., 1906, p. 33.

serve as illustrations of the way in which the heavier minerals of an eroded region may be concentrated at favorable points. The accumulations of gold, platinum, or iridosmine in placer deposits are other examples of this mechanical sorting. It is merely a separation of heavy from light minerals, the stable from the unstable, and the coarse from the fine.

There have been many examinations of sands from a mineralogical standpoint, and the fact that they contain a large number of species is well established. The Bagshot sands near London contain, according to A. B. Dick,[a] about 75 per cent of quartz, 20 of feldspar, and small but determinable proportions of magnetic grains, zircon, rutile, and tourmaline. In river sands from the Mesvrin, near Autun, France, A. Michel Lévy[b] found magnetite, zircon, olivine, garnet, sphene, chromite, tourmaline, and corundum. J. Thoulet[c] examined desert sand from the Algerian Sahara which consisted of 89.46 per cent of quartz and 9.47 of feldspar, with minute quantities of magnetite, chromite, garnet, olivine, amphibole, pyroxenes, calcium carbonate, sodium and potassium chlorides, and clay. In a glacial sand from the Tyrol, H. Wichmann[d] discovered quartz, orthoclase, micas, chlorite, epidote, hornblende, actinolite, garnet, zircon, rutile, tourmaline, hematite, and altered pyrite. J. A. Phillips[e] found the red sands of the Arabian Desert to consist essentially of quartz grains coated with oxide of iron. After washing with hydrochloric acid, the grains contained 98.53 per cent of silica. Probably the most elaborate investigation of this general kind is that by J. W. Retgers[f] on the dune sands of Holland. In these the principal minerals are quartz, garnet, augite, hornblende, tourmaline, epidote, staurolite, rutile, zircon, magnetite, ilmenite, orthoclase, calcite, and apatite. Subordinate species are plagioclase, microcline, iolite, titanite, sillimanite, olivine, kyanite, corundum, and spinel. The quartz, however, formed 90 to 95 per cent of the mixture. A beach sand from Pensacola, Florida, analyzed by G. Steiger in the laboratory of the United States Geological Survey, contained 99.65 per cent of SiO_2. Many sea and river sands consist of nearly pure quartz, pure enough to be used in glass making. The following analyses, by W. Mackie,[g] represent sands of diverse origin from various points in Scotland.

---

[a] Geology of London, vol. 1, p. 523, 1889; Nature, vol. 36, p. 91, 1887.

[b] Bull. Soc. min., vol. 1, p. 39, 1878.

[c] Idem, vol. 4, p. 262, 1881.

[d] Min. pet. Mitth., vol. 7, p. 452, 1886. The list of minerals found by W. M. Hutchings (Geol. Mag., 1894, p. 300) in English lake sediments is very similar to this.

[e] Quart. Jour. Geol. Soc., vol. 38, p. 110, 1882.

[f] Neues Jahrb., 1896, vol. 1, p. 16; Rec. trav. chim., vol. 11, p. 169, 1892.

[g] Trans. Edinburgh Geol. Soc., vol. 8, p. 60, 1901. On the mineralogical examination of sands see also C. H. Warren, Technology Quart., vol. 19, p. 317, 1906. For analyses of American glass sands see Bull. U. S. Geol. Survey No. 315, 1907, pp. 376, 382.

Analyses of sands.

A, B. Glacial sands.
C. Average of five river sands.
D. Sea sand.
E. Sea sand derived from subsilicic igneous rocks.
F. Blown sand.

	A.	B.	C.	D.	E.	F.
SiO_2	77.78	90.74	82.13	89.99	55.03	91.39
Al_2O_3	9.95	5.16	9.04	7.36	14.12	5.44
Fe_2O_3	2.55	1.14	2.94	.72	10.15	.89
FeO	.21	.08	.....	.13	.....	.16
MnO	.....	trace	.....	trace	.....	trace
CaO	.71	.69	1.28	.46	6.88	trace
MgO	.17	trace	.53	trace	6.38	trace
K_2O	2.50	1.19	1.93	.84	1.66	1.19
Na_2O	1.82	.26	.95	.33	.87	.70
P_2O_5	.....	.....	.20	.....	.....	.....
Ignition	2.74	1.30	1.01	.60	4.55	.65
	98.43	100.56	100.01	100.43	99.64	100.42

SILT.

Between sand and silt the difference is partly one of kind and partly one of degree. Silt consists of the finer particles of rock substance, which, by virtue of their lightness, are carried farthest by streams. This difference is mechanical. On the chemical side sand and silt differ in composition, but not radically. In sand quartz is the principal mineral; in silt the hydroxides and hydrous silicates predominate. Neither product is quite free from the other, but the distinction holds good in the main. The separation of quartz from clay is rarely quite complete, but is often approximately so.

Analyses of river silt or mud are not very numerous, nor are they always comparable. Some samples were analyzed after drying at 100°; others were air dried. Furthermore, silts represent blended material, gathered by a river from various sources, and derived from very dissimilar rocks. Mississippi silt, for instance, if collected near New Orleans, will be made up of contributions from various tributaries of the river, and these may be quite unlike. A region rich in femic rocks will yield sediments rich in iron, while an area of granite will give aluminous residues. Silts, therefore, are by no means uniform in character, although they have a general family resemblance. The following analyses are enough to show the more obvious differences and similarities:

Analyses of silts.

A. Rhine silt, from the delta in the Lake of Constance. Analysis by G. Bischof, Lehrb. chem. phys. Geol., 2d ed., vol. 1, p. 498. Bischof gives other data also concerning Rhine deposits.

B. Danube silt, at Vienna. Analysis by Bischof, op. cit., 512.

C. Vistula silt, at Culm. Analysis by Bischof, op. cit., p. 515.

D. Nile mud.[a] Analysis by C. v. John, Verhandl. K.-k. geol. Reichsanstalt, 1896, p. 259.

[a] See also analyses cited by G. Bischof, op. cit., pp. 518–521; and others cited by L. Horner, in two memoirs, Phil. Mag., 4th ser., vol. 9, p. 469, 1855; Phil. Trans., vol. 148, p. 61, 1859. In Science, vol. 23, p. 364, 1906, there is an incomplete analysis by C. H. Stone of Mississippi silt.

	A.	B.	C.	D.
SiO_2	50.14	45.02	49.67	45.10
Al_2O_3	4.77	7.83	11.98	15.95
Fe_2O_3	2.69	9.16	11.73	13.25
MnO	.35	.....	.....	.....
MgO	.34	.44	.27	2.64
CaO	.77	.32	.88	4.85
K_2O	.55	(?)	1.29	1.95
Na_2O	.54	(?)	.69	.85
$CaCO_3$	30.76	24.08	.....	.....
$MgCO_3$	1.24	6.32	.....	.....
$FeCO_3$	5.20	.....	.....	.....
SO_3	.....	.....	.....	.34
H_2O-	.99	4.58	23.21	6.70
H_2O+				[a] 8.84
Organic matter	.....	[b] 2.25		.....
Loss	1.66	.....	.....	.....
	100.00	100.00	99.72	100.47

[a] Loss on ignition. [b] Probably including alkalies.

The higher proportion of calcium carbonate in the silts of the upper Rhine and Danube is probably due to glacial mud produced by the grinding of limestones. The Nile mud is a much more typical product.

The amount of sediment carried in suspension by rivers to the sea is something enormous. The quantity delivered annually by the Mississippi to the Gulf of Mexico is estimated by A. A. Humphreys and H. L. Abbot [a] at approximately 812,500,000,000 pounds, or about 370,000,000 metric tons. The Nile, according to A. Chélu,[b] carries into the Mediterranean 51,428,500 metric tons a year. These quantities, vast as they are and sustained by similar estimates for many other streams, represent only a part of the transported sediments. The products of rock decomposition are distributed along the entire course of a river, and what proportion is delivered to the ocean no one can say. The fraction can not be very large. Upon reaching salt water, however, the silt is quickly deposited, and only a small part of it is carried far out to sea.[c] Salts in solution accelerate the deposition of sediments, and so, too, do acids and alkalies. In general, this precipitation is effected by electrolytes, but the explanation of the phenomenon is still obscure.[d] Colloid substances also promote sedi-

[a] Rept. on Physics and Hydraulics of Mississippi River, p. 148, 1876.

[b] Le Nil, le Soudan, l'Égypte, p. 177, 1891.

[c] For a table giving the amount of suspended sediment in sea water at various points, see J. Murray and R. Irvine, Proc. Roy. Soc. Edinburgh, vol. 18, p. 229, 1890-91. The Atlantic, for example, in latitude 51° 20′ N., longitude 31° W., carries 0.0052 gram of sediment in 14 liters, or 1,604 tons per cubic mile. In the Firth of Forth the quantity rises to 0.0259 gram, and in the Red Sea it falls to 0.0006.

[d] See C. Schlösing, Compt. Rend., vol. 70, p. 1345, 1870; W. H. Brewer, Am. Jour. Sci., 3d ser., vol. 29, p. 1, 1885; C. Barus, Bull. U. S. Geol. Survey No. 36, 1886; Barus and E. A. Schneider, Zeitschr. physikal Chemie, vol. 8, p. 285, 1891; W. Spring, Rec. trav. chim., vol. 19, p. 204, 1900, and G. Bodländer, Neues Jahrb., 1903, pt. 2, p. 147. See also T. S. Hunt, Proc. Boston Soc. Nat. Hist., vol. 16, p. 302, 1874; W. Ramsay, Quart. Jour. Geol. Soc., vol. 32, p. 129, 1876; J. Joly, Proc. Roy. Dublin Soc., vol. 9, p. 325, 1900; L. F. Vernon-Harcourt, Proc. Inst. Civ. Eng., vol. 142, p. 272, 1900; and J. Thoulet, Ann. mines, 8th ser., vol. 19, p. 5, 1891.

mentation, a fact which has many practical applications. The clearing of coffee by white of egg or the fining of sirups by blood or gelatin is a phenomenon of the most familiar kind. W. Spring[a] has shown that the organic matter of natural waters is incompatible with iron, the two substances separating out as a flocculent precipitate. One part of colloidal ferric oxide will remove ten parts of humus from solution. The use of alum or iron salts in large filtration plants is an application of this principle. These salts hydrolyse, forming partly colloidal substances. The organic matter or humus of natural waters is itself colloidal. The two form a flocculent precipitate which quickly subsides and carries down with it, mechanically inclosed, even the finest sediments. The remarkable clearness of swamp waters is perhaps due to the flocculation of their organic matter and the consequent precipitation of all suspended particles. Sedimentation, in short, is a complex phenomenon, and several distinct agencies assist in bringing it about.

GLACIAL CLAYS.

Between the silt formed by the decay of rocks and that produced by glaciers there is a radical distinction. The one is termed by T. C. Chamberlin and R. D. Salisbury[b] rock rot; the other is rock flour. One has been produced by a thorough leaching of the rocks under atmospheric agencies; but glacial mud is composed of material which was ground to powder under conditions that protected it in some measure from the oxygen and carbonic acid of the air. The latter, therefore, has retained a larger proportion of soluble matter than the former. These differences appear in the following analyses, made by Riggs in the laboratory of the United States Geological Survey, and cited by Chamberlin and Salisbury in the memoir mentioned above. With them I give two analyses by W. Mackie[c] of bowlder clay from Scottish localities.

Analyses of clays.

(1) Residuary clays, dried at 100°:
  A. From Dodgeville, Wisconsin, 4½ feet below surface.
  B. The same, 8½ feet below surface.
  C. From Cobb, Wisconsin, 4½ feet below surface.
  D. The same, 8½ feet below surface.
(2) Glacial or drift clays:
  E, F. From Milwaukee. Dried at 100°.
  G, H. Scottish bowlder clays, Mackie.

[a] Bull. Acad. Belg., 3d ser., vol. 34, p. 578, 1897.
[b] Sixth Ann. Rept. U. S. Geol. Survey, pp. 249–250, 1885.
[c] Trans. Edinburgh Geol. Soc., vol. 8, p. 60, 1901.

	A.	B.	C.	D.	E.	F.	G.	H.
SiO_2	71.13	49.59	49.13	53.09	40.22	48.81	80.13	74.89
Al_2O_3	12.50	18.64	20.08	21.43	8.47	7.54	9.06	12.22
Fe_2O_3	5.52	17.19	11.04	8.53	2.83	2.53	} 2.44	} 4.29
FeO	.45	.27	.93	.86	.48	.65		
MgO	.38	.73	1.92	1.43	7.80	7.05	.50	.07
CaO	.85	.93	1.22	.95	15.65	11.83	.72	1.58
Na_2O	2.19	.80	1.33	1.45	.84	.92	.66	1.06
K_2O	1.61	.93	1.60	.83	2.36	2.60	2.08	2.64
H_2O	4.63	10.46	11.72	10.79	1.95	2.02	[a]4.11	[a]3.21
TiO_2	.45	.28	.13	.16	.35	.45	.....	.....
P_2O_5	.02	.03	.04	.03	.05	.13	.14	.07
MnO	.04	.01	.06	.03	trace	.03	.....	.17
CO_2	.43	.30	.39	.29	18.76	15.47	.....	.....
Organic C	.19	.34	1.09	.22	.32	.38	.....	.....
SO_3	.....	.....	.....	.....	.13	.05	.....	.....
Cl	.....	.....	.....	.....	.06	.04	.....	.....
	100.39	100.50	100.68	100.09	100.27	100.50	99.84	100.20

[a] Loss on ignition. Must include CO_2 and organic matter.

In the two Wisconsin clays the carbonates represent magnesian limestone. The Scottish clays had evidently a different parentage. Glacial clays often contain carbonates, which are rarely conspicuous in rock residues.[a] Even residual soils derived from the decay of limestones are practically free from carbonates, as the subjoined analyses show. The residues are merely clay or silt entangled with the limestone when the latter was laid down, and released by its solution.

[a] Innumerable analyses of clays and soils have been made for agricultural and other industrial purposes. Several States have issued special reports upon their clay industries. Among the reports of geological surveys are those of Connecticut, Bull. No. 4, 1905, G. F. Loughlin; New Jersey, 1878, G. H. Cook; New Jersey, vol. 6, 1904, H. Ries and H. B. Kümmel; Maryland, vol. 4, pp. 203–503, Ries; Virginia, Bull. No. 11, 1906, Ries; West Virginia, vol. 3, 1905, G. P. Grimsley; South Carolina, Bull. No. 1, 4th ser., 1904, E. Sloan; Georgia, Bull. No. 6 A, 1898, G. E. Ladd; Alabama, Bull. No. 6, 1900, Ries; Wisconsin, Bull. No. 7, 1901, E. R. Buckley; Missouri, vol. 11, 1896, H. A. Wheeler; Indiana, Twenty-ninth Ann. Rept., 1905, W. S. Blatchley; Iowa, vol. 14, 1904, S. W. Beyer and I. A. Williams; Wisconsin, Bull. No. 15, 1906, Ries. See also the volumes on chemical analyses published by the geological surveys of Pennsylvania and Kentucky; Bull. New York State Mus., vol. 3, No. 12, 1895, Ries; and Bull. U. S. Geological Survey No. 228, pp. 351–370. Ries, Sixteenth Ann. Rept. U. S. Geol. Survey, pp. 554–574, 1895, gives a long table of analyses of American clays, and a general report by Ries forms Prof. Paper No. 11 of the Survey, 1903. Bull. U. S. Geol. Survey No. 143, 1896, by J. C. Branner, is a bibliography of clays and ceramics. The American Ceramic Society has since (1906) published a more elaborate bibliography by the same author. Geology of North Carolina, vol. 1, 1875, contains much material on soils, and so, too, do the volumes on cotton production published by the Tenth U. S. Census. The literature regarding soils is too voluminous to admit of any summary here. Recent papers of interest are those by N. Sibirtzew, Compt. Rend. VII Cong. internat. géol., p. 73, 1897, on the soils of Russia, and by W. Frear and C. P. Beistle, Jour. Am. Chem. Soc., vol. 25, p. 5, 1903. Work by Schlösing and Van Bemmelen on tropical soils has already been cited. W. Maxwell (Lavas and Soils of the Hawaiian Islands, Honolulu, 1898) and A. B. Lyons (Am. Jour. Sci., 4th ser., vol. 2, p. 421, 1896) have also contributed to this phase of the subject. On the constitution of arable soils see L. Cayeux, Ann. Soc. géol. du Nord, vol. 34, p. 146, 1905. On the origin and nature of soils see N. S. Shaler, Twelfth Ann. Rept. U. S. Geol. Survey, pt. 1, p. 219, 1891. On fuller's earth see T. W. Vaughan, Bull. U. S. Geol. Survey No. 213, p. 392, 1903, and J. T. Porter, Bull. No. 315, p. 268, 1907. On soils in general see E. W. Hilgard's treatise "Soils," published in 1906.

Analyses of residual clays.

A. Residual clay from so-called Trenton limestone, Lexington, Virginia. Analysis by R. B. Riggs. Described by I. C. Russell, Bull. U. S. Geol. Survey No. 52, 1889.[a]

B. Residual clay from limestone, Staunton, Virginia. Analysis by George Steiger, U. S. Geol. Survey.

C. Residual clay from Knox dolomite, Morrisville, Alabama. Analysis by W. F. Hillebrand. Described by Russell, op. cit.

	A.	B.	C.
SiO_2	43.07	55.90	55.42
Al_2O_3	25.07	19.92	22.17
Fe_2O_3	15.16	7.30	8.30
FeO	.....	.39	trace
MgO	.03	1.18	1.45
CaO	.63	.50	.15
Na_2O	1.20	.23	.17
K_2O	2.50	4.79	2.32
H_2O-	12.98	2.54	2.10
H_2O+		6.52	7.76
TiO_2	.....	.20	.....
P_2O_5	.....	.10	.....
CO_2	.....	.38	.....
	100.64	99.95	99.84

LOESS.

In its chemical composition the widespread earthy deposit known as loess closely resembles the glacial clays. It commonly, but not invariably, contains much calcium carbonate, and the same is true of the related or perhaps identical adobe soil of the more arid regions in our Western States. The more striking peculiarities of the loess are its light color, its extremely fine state of subdivision, the angularity of its particles, its lack of stratification, its coherence, and its porosity. Furthermore, the fossils found in loess are almost without exception the remains of land animals, which indicate that it can not be a deposit from permanent waters.

Over the origin of loess there has been much controversy, but the subject is one that admits of only the briefest summary here. The prevalent view is essentially that of F. Richthofen,[b] who interprets the loess of China as an eolian formation. In the arid regions of central Asia the products of rock disintegration are sorted by the winds, and the finest blown dust finally comes to rest where it is entangled and protected by the grasses of the steppes. Temporary streams, formed by torrential rains, assist in its concentration and bring about accumulations of loess in valleys and other depressions of the land. According to I. C. Russell[c] the adobe of the Great Basin is formed essentially in this way, and the sediments deposited

[a] Russell especially discusses the cause of red coloration in clays. On this subject see also W. O. Crosby, Am. Geologist, vol. 8, p. 72, 1891; and W. Spring, Rec. trav. chim., vol. 17, p. 202, 1898.

[b] China, vol. 1, p. 74; Geol. Mag., 1882, p. 297. See also R. Pumpelly, Am. Jour. Sci., 3d ser., vol. 17, p. 133, 1879.

[c] Geol. Mag., 1889, pp. 289, 342.

in the so-called "playa" lakes, whose beds are dry during a great portion of the year, consist of this material. The adobe contains the finer products formed by subaerial erosion of the mountain slopes, and may be commingled sometimes with dust of volcanic origin. The loess of the Missouri and upper Mississippi valleys is given nearly the same interpretation by C. R. Keyes,[a] only in this case the dust is formed from river silt left on the dried mud banks in times of low water.

The loess of Iowa is regarded by W J McGee[b] as a glacial silt, deposited along the margins of glaciers during the glacial period. W. F. Hume,[c] studying the Russian loess, described that also as glacial silt, distributed partly by winds and partly by floods. C. Davison[d] considers loess to be a product of glacial erosion, accumulated first in banks of snow, and concentrated later in the valleys by the rush of water following a thaw. T. C. Chamberlin[e] is inclined to combine the various theories concerning loess, and to regard it as both glacial and eolian. Here again, as in so many other instances, we must remember that similar products may be formed in several different ways. The loess of China may be one thing and that of the Mississippi Valley another. They are alike in their extreme comminution, but not necessarily identical in origin.

A microscopic examination of loess from Muscatine, Iowa, by J. S. Diller,[f] showed that quartz was its most abundant constituent. Orthoclase, plagioclase, and hornblende were also present, with occasional fragments of biotite and tourmaline, some carbonates, and clay colored by oxide of iron. Chemical analyses of loess seem not to be very numerous. The following were made in the laboratory of the United States Geological Survey:

Analyses of loess.

A. Near Galena, Illinois.
B. Near Dubuque, Iowa.
C. Vicksburg, Mississippi.
D. Kansas City, Missouri. Analyses A to D by R. B. Riggs. Discussed by T. C. Chamberlin and R. D. Salisbury, Sixth Ann. Rept. U. S. Geol. Survey, p. 282, 1885. Samples dried at 100°.
E. Cheyenne, Wyoming.
F. Denver, Colorado.
G. Highland, Colorado. Analyses E to G by L. G. Eakins. Discussed by S. F. Emmons, Mon. U. S. Geol. Survey, vol. 27, p. 263, 1896, together with several other examples.

[a] Am. Jour. Sci., 4th ser., vol. 6, p. 299, 1898. Keyes describes the dust storms of the Missouri Valley, in which great quantities of aerial sediments are carried from place to place.

[b] Eleventh Ann. Rept. U. S. Geol. Survey, pt. 1, pp. 291, 435, 1891. See also F. Leverett, Mon. U. S. Geol. Survey, vol. 38, pp. 153–184, 1899, for an account of Iowan loess. The loess of Colorado is described by S. F. Emmons in Mon. U. S. Geol. Survey, vol. 27, p. 263, 1896.

[c] Geol. Mag., 1892, p. 549.

[d] Quart. Jour. Geol. Soc., vol. 50, p. 472, 1894.

[e] Jour. Geol., vol. 5, p. 795, 1897. See also T. C. Chamberlin and R. D. Salisbury, Sixth Ann. Rept. U. S. Geol. Survey, p. 250, 1885.

[f] Bull. U. S. Geol. Survey No. 150, p. 65, 1898.

	A.	B.	C.	D.	E.	F.	G.
SiO_2	64.61	72.68	60.69	74.46	67.10	69.27	60.97
Al_2O_3	10.64	12.03	7.95	12.26	10.26	13.51	15.67
Fe_2O_3	2.61	3.53	2.61	3.25	2.52	3.74	5.22
FeO	.51	.96	.67	.12	.31	1.02	.35
MnO	.05	.06	.12	.02	.....	trace	trace
MgO	3.69	1.11	4.56	1.12	1.24	1.09	1.60
CaO	5.41	1.59	8.96	1.69	5.88	2.29	2.77
Na_2O	1.35	1.68	1.17	1.43	1.42	1.70	.97
K_2O	2.06	2.13	1.08	1.83	2.68	3.14	2.28
H_2O	2.05	2.50	1.14	2.70	5.09	4.19	9.83
TiO_2	.40	.72	.52	.14	.....	.....	.....
P_2O_5	.06	.23	.13	.09	.11	.45	.19
CO_2	6.31	.39	9.63	.49	3.67	trace	.31
C, organic	.13	.09	.19	.12	.....	.....	.....
SO_3	.11	.51	.12	.06	.....	.....	.....
Cl	.07	.01	.08	.05	.....	.....	.....
	100.06	100.22	99.62	99.83	100.28	100.40	100.16

Several other analyses of loess from the Rhine Valley are given by G. Bischof.[a] They resemble the analysis of Rhine silt cited on page 429, *ante*. The following analyses of adobe soil were made in the laboratory of the United States Geological Survey, by L. G. Eakins.

Analyses of adobe soil.

A. Salt Lake City, Utah. B. Santa Fe, New Mexico. C. Fort Wingate, New Mexico. D. Humboldt, Nevada.

	A.	B.	C.	D.
SiO_2	19.24	66.69	26.67	44.64
Al_2O_3	3.26	14.16	.91	13.19
Fe_2O_3	1.09	4.38	.64	5.12
MnO	trace	.09	trace	.13
MgO	2.75	1.28	.51	2.96
CaO	38.94	2.49	36.40	13.91
Na_2O	trace	.67	trace	.59
K_2O	trace	1.21	trace	1.71
H_2O	1.67	4.94	2.26	3.89
P_2O_5	.23	.29	.75	.94
CO_2	29.57	.77	25.84	8.55
Organic matter	2.96	2.00	5.10	3.43
SO_3	.53	.41	.82	.64
Cl	.11	.34	.07	.14
	100.35	99.72	99.97	99.84

The extremely variable but generally calcareous nature of these soils is sufficiently indicated. It is highly desirable that there should be some good analyses made of Chinese loess, for use in comparison with these.[b] If Richthofen's theory of its origin is correct, it should contain much organic matter derived from the grasses which are supposed to aid in its accumulation. It is known to contain abundant carbonates, which may represent the unleached dust of limestones or

[a] Lehrb. chem. phys. Geol., 2d ed., vol. 1, p. 504. See also data given by J. Roth, Allgem. chem. Geol., vol. 3, p. 619.

[b] An incomplete analysis of loess from the upper Wey-Ho Valley, by A. Schumacher, is given in Wissenschaftliche Ergebnisse der Reise des Grafen Béla Széchenyi in Ostasien, p. 387, Wien, 1899.

may have been introduced in solution by waters brought up through capillary action from below.

MARINE SEDIMENTS.

The oceanic sediments are naturally complex, for they are derived from the most varied sources. Near shore are found the products of wave erosion, the silt brought in by streams, remnants of shells and corals, and organic matter from seaweeds. In some localities, as around coral islands, the débris consists chiefly of calcium carbonate, and that compound, as shown in a previous chapter,[a] is also formed as a chemical precipitate.

Floating ice, the remnants of polar glaciers, deposits more or less stony material in the warmer parts of the ocean; and volcanic ash, from either submarine or subaerial eruptions, covers large areas on the bottom of the sea. Even cosmic dust, which has been gently falling throughout all geologic time, has made perceptible contributions to the great mass of oceanic sediments.[b]

Notwithstanding the diversity of these deposits, their distribution is not entirely fortuitous. River silt, for example, is an important oceanic sediment only in a belt surrounding the continents, and comparatively near shore. In relatively small amounts it is diffused through all parts of the ocean, but beyond a certain limit its influence is small. The yellow silt of the Chinese Sea, worn by the Chinese rivers from erosion of the loess, may be observed as much as a hundred miles from land,[c] and the turbidity of the Amazon is evident in the ocean at still greater distances; but the larger part of the deposits thus formed are laid down in relatively shallow water. Glacial débris, of course, occurs only near glaciers and along the tracks followed by icebergs. Certain oceanic areas are characterized by sediments of organic origin; and in the deepest abysses of the ocean its floor is covered by a characteristic red clay. These varied deposits shade into one another through all manner of blendings, and yet they are distinct enough for purposes of classification.

In their great volume upon "Deep-sea deposits," Murray and Renard[d] adopt a classification which is perhaps as good as any yet devised. The following table shows its character and also the distribution in depth and area of the several sediments named.

[a] See p. 99, *ante*.
[b] See J. Murray and A. Renard, Proc. Roy. Soc. Edinburgh, vol. 12, p. 474, 1883–84.
[c] R. Pumpelly, Am. Jour. Sci., 3d ser., vol. 17, p. 133, 1879.
[d] Challenger Rept., Deep-sea deposits, table on p. 248, 1891.

Mean depth and area covered by marine sediments.

		Mean depth, fathoms.	Area, square miles.
Littoral deposits (between tide marks)		.....	62,500
Shallow-water deposits (low water to 100 fathoms)		.....	10,000,000
Terrigenous deposits, near land	Coral mud	740	2,556,800
	Coral sand	176	
	Volcanic mud	1,033	600,000
	Volcanic sand	243	
	Green mud	513	850,000
	Green sand	449	
	Red mud	623	100,000
Pelagic deposits, deep water, far from land	Blue mud	1,411	14,500,000
	Pteropod ooze	1,044	400,000
	Globigerina ooze	1,996	49,520,000
	Diatom ooze	1,477	10,880,000
	Radiolarian ooze	2.894	2,290 000
	Red clay	2,730	51.500 000

For these various products many analyses are given, and from among them a few may be cited here. The red clay which covers the largest areas is regarded by Murray and Renard as derived from the decomposition of volcanic ejectamenta. The several oozes owe their names to the remains of living creatures which they contain, and calcium carbonate is one of their important constituents. The distribution of calcium carbonate according to depth was discussed in a former chapter[a] of this work, together with the composition of the peculiar manganese and phosphatic nodules which are often found in great numbers in the deeper parts of the sea.

Analyses of marine sediments.

A. Red clay.[b] Twenty-three analyses by J. S. Brazier are tabulated on page 198, and there is a discrimination between the portions soluble and insoluble in hydrochloric acid. Some of these analyses show calcium carbonate up to 60 per cent; the one selected here, as representing a more typical clay, contains the minimum of carbonate.

B. Radiolarian ooze. Rich in siliceous organisms. Analysis by Brazier, page 436.

C. Diatom ooze. Rich in siliceous organisms. Analysis by Brazier, page 436.

D. Globigerina ooze. Twenty-one analyses are given on page 219. Analysis by Brazier, No. 42, showing low calcium carbonate.

E. Globigerina ooze. Analysis by Brazier, No. 53, showing very high carbonate.

F. Pteropod ooze. Analysis by Brazier, page 448.

All samples dried at 110° previous to analysis. The soluble and insoluble portions in analyses A, B, and D are not separated in the following table.

	A.	B.	C.	D.	E.	F.
Ignition	4.50	7.41	5.30	7.90	1.40	2.00
SiO_2	62.10	56.02	67.92	31.71	1.36	3.65
Al_2O_3	16.06	10.52	.55	11.10	.65	.80
Fe_2O_3	11.83	14.99	.39	7.03	.60	3.06
MnO_2	.55	3.23	.....	trace	.....	.....
CaO	.28	.39	.....	.41	.....	.....
MgO	.50	.25	.....	.12	.....	.....
$CaCO_3$	.92	3.89	19.29	37.51	92.54	82.66
$Ca_3P_2O_8$	.19	1.39	.41	2.80	.90	2.44
$CaSO_4$	.37	.41	.29	.29	.19	.73
$MgCO_3$	2.70	1.50	1.13	1.13	.87	.76
Insoluble[c]	.....	.....	4.72	.....	1.49	3.90
	100.00	100.00	100.00	100.00	100.00	100.00

[a] Chapter IV, pp. 100–106, *ante*.

[b] See also J. B. Harrison and A. J. Jukes Brown, Quart. Jour. Geol. Soc., vol. 51, *p. 313, 1895*, for other analyses of red clay and oceanic oozes.

[c] *Contains silica*, alumina and ferric oxide, not separated.

G. Blue mud. Analysis by J. S. Brazier, page 448.
H. Red mud. Analysis by M. Hornung, page 445. Dried at 100°.
I. Green mud. Analysis by Brazier, page 449.
J. Green sand. Analysis by Brazier, page 449.
K. Volcanic mud. Analysis by Brazier, page 450.

Analyses G to K represent "terrigenous" deposits. Brazier's samples were all dried at 110°. The soluble and insoluble portions are here united.

	G.	H.	I.	J.	K.
Ignition	5.60	6.02	3.30	9.10	6.22
SiO_2	64.20	31.66	31.27	29.70	34.12
Al_2O_3	13.55	9.21	4.08	3.25	9.22
Fe_2O_3	8.38	4.52	12.72	5.05	15.46
MnO_2	.....	.....	.....	.....	trace
CaO	2.51	25.68	.30	.22	1.44
MgO	.25	2.07	.12	.13	.22
Na_2O	.....	1.63	.....	.....	.....
K_2O	.....	1.33	.....	.....	.....
$CaCO_3$	2.94	.....	46.36	49.46	32.22
$Ca_3P_2O_8$	1.39	.....	.70	trace	trace
$CaSO_4$	.42	.....	.58	1.07	.27
$MgCO_3$	.76	.....	.57	2.02	.83
SO_3	.....	.27	.....	.....	.....
CO_2	.....	17.13	.....	.....	.....
Cl	.....	2.46	.....	.....	.....
	100.00	101.98	100.00	100.00	100.00
Less O=Cl	.....	.87	.....	.....	.....
		101.11			

These analyses serve well enough to show the variable character of the oceanic sediments, but they are in several respects incomplete. In order to determine the composition of the oceanic clays more minutely, two analyses have been made in the laboratory of the United States Geological Survey upon material kindly furnished by Sir John Murray. The samples analyzed were composites of many individual specimens, brought together from all of the great oceans and collected partly by the *Challenger* and partly by other expeditions. The data are as follows, reduced to uniformity by rejection of sea salts, calcium carbonate, and hygroscopic water, and recalculation of the remainder to 100 per cent.

Analyses of composite samples of marine sediments.

A. Composite of fifty-one samples of the "red clay." Analyzed by G Steiger, with special determinations by W. F. Hillebrand and E. C. Sullivan.

B. Composite of fifty-two samples of "terrigenous clays," namely, four "green muds" and forty-eight "blue muds." Analysis by G. Steiger.

	A.	B.
SiO_2	54.48	57.09
TiO_2	.98	1.27
Al_2O_3	15.94	17.24
Cr_2O_3	.012	.05
Fe_2O_3	8.66	5.07
FeO	.84	2.30
NiO, CoO	.039	undet.
MnO	.....	.12
MnO_2	1.21	.....
MgO	3.31	2.17
CaO	1.96	2.04
SrO	.056	.03
BaO	.20	.06
K_2O	2.85	2.25
Na_2O	2.05	1.05
V_2O_3	.035	.03
As_2O_3	.001	undet.
MoO_3	trace	.....
P_2O_5	.30	.21
S	.....	.13
CuO	.024	.02
PbO	.008	undet.
ZnO	.005	undet.
C	.....	1.69
H_2O	7.04	7.18
	100.000	100.00

These figures give the average composition of the two oceanic sediments and show the distribution in them of the minor and rarer constituents. Even these analyses need to be supplemented by others, of which many can be found scattered through the literature of oceanography.[a] The data are abundant, but their value upon the purely chemical side is very uneven. Few conclusions can be deduced from them. J. Y. Buchanan,[b] who found free sulphur in a number of marine muds, thinks that sulphates were reduced to sulphides by passing through the digestive organs of marine ground fauna, and points out that matter at the bottom of the sea is subject also to reoxidation by dissolved oxygen. When oxidation is in excess of reduction red sediments are formed; if the reducing process preponderates, the sediments are blue. In the Black Sea, according to N. Androussow,[c] the sulphates contained in the water are also partly reduced by micro-organisms, which liberate hydrogen sulphide. A portion of this gas is reoxidized, with some liberation of sulphur; another part takes up iron from the sediments and forms abundant deposits of pyrites.

[a] See, for example, K. Natterer, on Mediterranean muds, Monatsh. Chemie, vol. 14, p. 624, 1893; vol. 15, p. 530, 1894; also upon Red Sea deposits, idem, vol. 20, p. 1, 1899. L. Schmelck (Den Norske-Nordhavs Expedition, pt. 9) gives many analyses of marine clays. J. Y. Buchanan (Proc. Roy. Soc. Edinburgh, vol. 18, p. 131, 1890–91) reports partial analyses of Mediterranean samples. A. and H. Strecker (Liebig's Annalen, vol. 95, p. 177, 1855) described a peculiar mud known as "gytje," from the Sandefjord, Norway. A later study of the same substance was published by E. Bödtker (Liebig's Annalen, vol. 302, p. 43, 1898).

[b] *Proc. Roy. Soc.* Edinburgh, vol. 18, p. 17, 1890–91.

[c] *Guide des* excursions du VII Cong. géol. internat., No. 29, p. 6, 1897.

The calcareous oozes obviously represent calcium carbonate absorbed by living organisms from its solution in sea water and deposited with their remains after death. It therefore owes its origin to rock decomposition, during which the lime was removed to be carried in solution by rivers to the sea. The siliceous oozes were formed in a similar manner by radiolarians and diatoms, which, as J. Murray and R. Irvine[a] have shown, are able to decompose the suspended particles of clay that reach the ocean and to assimilate their silica. A slimy mass of siliceous algæ analyzed by Murray and Irvine contained 77 per cent of silica, 1.38 of alumina, 16.75 of organic matter, and 4.87 of water. From materials of this kind, which are very abundant in the ocean, these particular oozes were produced, but their primary substance—silt, or volcanic ash, or atmospheric dust—came from the decomposition of rocks upon the land. In some cases siliceous deposits have been developed in another way, namely, by the silicification of shells and corals. Remains of this kind are plentifully found in sedimentary rocks, and the process of their formation can be imitated artificially. A. H. Church,[b] by allowing a very weak solution of colloidal silica to percolate through a fragment of coral, succeeded in dissolving away the calcium carbonate and leaving in its place a siliceous pseudomorph.

GLAUCONITE.

In oceanic sediments, and chiefly near the "mud line" surrounding the continental shores, the important mineral glauconite is found in actual process of formation. This green, granular silicate of potassium and iron occurs in rocks of nearly all geologic ages, from the Cambrian down to the most recent horizons, and there has been much discussion over its nature and origin. In composition it is exceedingly variable, for the definite compound is never found in a state of purity, but is always contaminated by alteration products and other extraneous substances. As an oceanic deposit glauconite is developed principally in the interior of shells, and organic matter is believed to play a part in its formation. According to Murray and Renard,[c] the shell is first filled with fine silt or mud, upon which the organic matter of the dead animal can act. Through intervention of the sulphates contained in the sea water, the iron of the mud is converted into sulphide, which oxidizes later to ferric hydroxide. At the same time alumina is removed from the sediments by solution and colloidal silica is liberated. The latter reacts upon the ferric hydroxide in presence of potassium salts extracted from adjacent minerals, and so glauconite is produced. This view is sustained by other evidence, namely, the constant association of the glauconite

[a] Proc. Roy. Soc. Edinburgh, vol. 18, p. 229, 1890–91.
[b] Jour. Chem. Soc., vol. 15, p. 109, 1862.
[c] *Challenger* Rept., Deep-sea deposits, p. 383, 1891.

shells with the débris of rocks in which potassium-bearing minerals, such as orthoclase and muscovite, occur.[a]

This theory of Murray and Renard seems to be fairly satisfactory, so far as it goes, but it does not cover the entire ground. It applies to the glauconite which is now forming upon the sea bottom, but not to all occurrences of glauconite in the sedimentary rocks. In an important memoir L. Cayeux[b] has shown that in certain instances glauconite has formed subsequent to the consolidation of its rocky matrix, and while he admits that organic matter has assisted its development within shells, the mineral can be produced by some quite different process. What this process is he does not explain; he merely shows that glauconite can form without the intervention of organisms, and that its mode of genesis is at least twofold. Incidentally also he states that ferric hydroxide and pyrite are produced by the decomposition of glauconite, an observation which seems to indicate that the reactions predicated by Murray and Renard may be reversible.

The granules of glauconite from marine mud and from the sedimentary rocks, although not found as definite crystals, have nevertheless a distinct cleavage, and are interpreted by A. Lacroix[c] as monoclinic and analogous to the micas. There is, however, another mineral, celadonite, which is regarded by Dana and other writers as a separate species, but which resembles glauconite so closely in composition that it may be the same thing. It occurs as a decomposition product of augite in various basaltic rocks, is green like glauconite, but earthy in texture, and never granular. It is easily confounded with other green chloritic minerals and its diagnosis is never certain unless supported by a complete chemical analysis. C. W. von Gümbel[d] and K. Glinka[e] both identify it chemically with glauconite, despite its entirely different origin, a conclusion which, if sustained, gives us another illustration of the fact that a chemical compound may be produced by several distinct processes. Still another mineral, found in the iron-bearing rocks of the Mesabi district, and named greenalite by C. K. Leith,[f] has been confounded with glauconite, although it is free from potassium and its iron is practically all in the ferrous state. In glauconite the iron is mainly ferric, and

[a] For other discussions relative to the origin of glauconite see C. W. von Gümbel, Sitzungsb. Akad. München, vol. 16, p. 417, 1886; vol. 26, p. 545, 1896. Also D. S. Calderon, D. F. Chaves, and P. del Pulgar, An. Soc. españ. hist. nat., vol. 23, p. 8, 1894. The older literature of the subject is unimportant for present purposes.

[b] Contributions à l'étude micrographique des terrains sédimentaires: Mém. Soc. géol. du Nord, vol. 4, pt. 2, pp. 163–184, 1897.

[c] Minéralogie de la France, vol. 1, p. 407, 1893–1895. Lacroix gives a number of analyses of French and Belgian glauconites.

[d] Sitzungsb. Akad. München, vol. 26, p. 545, 1896.

[e] Zeitschr. Kryst. Min., vol. 30, p. 390, 1899. Abstract from a Russian original.

[f] Mon. U. S. Geol. Survey, vol. 43, p. 240, 1903. Leith gives a long table of glauconite analyses.

potassium is one of its essential constituents. According to the best analyses, glauconite probably has, when pure, the composition represented by the formula $Fe'''KSi_2O_6.aq.$, in which some iron is replaced by aluminum and other bases partly replace K.[a] This formulation is not final, neither does it suggest any relationship between glauconite and the micas. It rests upon Glinka's analyses of Russian glauconite, in which the material was freed from impurities by means of heavy solutions. The water in the formula is probably for the most part "zeolitic" and not constitutional, as in the case of analcite, a silicate of similar chemical type.

The following analyses of glauconite and celadonite will serve to show the variability of the material.[b]

Analyses of glauconite and celadonite.

A. Glauconite, from Woodburn, Antrim, Ireland. Analysis by A. P. Hoskins, Geol. Mag., 1895, p. 320.

B. Glauconite from Cretaceous sandstone, Padi, Government Saratoff, Russia. One of ten analyses, by K. Glinka (Zeitschr. Kryst. Min., vol. 30, p. 390, 1899), of Russian material from the Lower Silurian, Jurassic, Eocene, and Cretaceous. This sample lost 4.43 per cent of water at 100°, but regained it in twenty-four hours.

C. Glauconite from greensand marl, Hanover County, Virginia. Analysis by M. B. Corse and C. Baskerville, Am. Chem. Jour., vol. 14, p. 627, 1892. 8.22 per cent of the silica is stated separately as quartz.

D. Oceanic glauconite, mean of four analyses made by L. Sipöcz for Murray and Renard, Challenger Rept., Deep-sea deposits, p. 387, 1891.

E. Glauconite, Monte Brione, Lake Garda, Italy. Analysis by A. Schwager. Described by C. W. von Gümbel, Sitzungsb. Akad. München, vol. 26, p. 545, 1896.

F. Celadonite, Monte Baldo, near Verona, Italy. Analysis by Schwager. See Gümbel, loc. cit.

G. Celadonite, mean of four analyses of material from Scottish localities, by M. F. Heddle. Trans. Roy. Soc. Edinburgh, vol. 29, p. 102, 1880.

	A.	B.	C.	D.	E.	F.	G.
SiO_2	40.00	48.95	51.56	53.61	50.36	55.80	54.84
Al_2O_3	13.00	7.66	6.62	9.56	7.04	3.20	3.52
Fe_2O_3	16.81	23.43	15.16	21.46	19.13	16.85	12.64
FeO	10.17	1.32	8.33	1.58	3.95	3.88	4.90
MnO	.....	.....	.....	trace	.06	.12	.24
MgO	1.97	2.97	.95	2.87	4.08	5.32	6.65
CaO	1.97	.57	.62	1.39	.91	.16	.89
Na_2O	2.16	.98	1.84	.42	1.58	1.12	.39
K_2O	8.21	9.54	4.15	3.49	6.62	9.04	7.00
Li_2O	.....	.....	.....	.....	.01	.....	.....
H_2O	6.19	4.93	10.32	5.96	6.32	4.67	9.62
Organic	.....	.....	.....	.....		trace	.....
TiO_2	.....	.....	.....	.....	.02	.24	.....
P_2O_5	.....	.....	.....	.....	.26	.07	.....
	100.48	100.35	99.55	100.34	100.34	100.47	100.69

If, now, we assume that celadonite and glauconite are at bottom the same ferripotassic silicate, differing only in their impurities, we may begin to see that the several modes of its formation are not absolutely different after all. Probably, in all their occurrences, the final reaction is the same, namely, the absorption of potassium and

[a] See discussion by F. W. Clarke in Mon. U. S. Geol. Survey, vol. 43, p. 243, 1903. Compare L. W. Collet and G. W. Lee, Compt. Rend., vol. 142, p. 999, 1906.

[b] Many analyses of greensand marls are given by G. H. Cook, in Geology of New Jersey, pp. 414 et seq., 1868. On New Jersey greensands see also W. B. Clark, Jour. Geol., vol. 2, p. 161, 1894. On Irish glauconite, see A. J. Hoskins, Geol. Mag., p. 317, 1895.

soluble silica by colloidal ferric hydroxide. In the ocean these materials are prepared by the action of decaying animal matter upon ferruginous clays and fragments of potassium-bearing silicates. In the sedimentary rocks, when glauconite appears as a late product, the action of percolating waters upon the hydroxide would account for its formation. In igneous rocks the hydroxide is derived from augite, or perhaps from olivine, and percolating waters again come into play. Thus the various productions of glauconite and celadonite become the results of a single process, which is exactly equivalent to that in which potassium compounds are taken up by clays. The observation of L. Cayeux [a] that glauconite is frequently present in arable soils, in all conditions from perfect freshness to complete alteration into limonite, suggests that perhaps the formation of the species is one of the modes by which potassium is withdrawn from its solution in the ground waters.

PHOSPHATE ROCK.

Among the phosphates of the igneous and crystalline rocks, only one, apatite, has any large significance. Monazite and xenotime are altogether subordinate. Apatite, as was shown in previous chapters,[b] is widely distributed, but in relatively small proportions; although it is sometimes concentrated into large deposits or in veins. The commercially important apatites of Canada, Norway, and Spain are segregations of this kind.[c]

By various processes, which are not yet fully understood, apatite undergoes alteration, and by percolating carbonated waters it is slowly dissolved. Some of the phosphoric acid, thus removed in solution, is carried by rivers to the sea, where it is largely absorbed by living organisms. Some of it reacts upon other products of rock decomposition, forming new secondary phosphates. Another portion is retained by the soil, whence it is extracted by plants, to pass from them into the bodies of animals. From organic sources, such as animal remains, the largest deposits of phosphates are derived. Between the original apatite and a bed of phosphorite there are many stages whose sequence is not always the same.

The solubility of apatite, and of the other forms of calcium phosphate, has been studied by many investigators.[d] R. Müller [e] has

---

[a] Ann. Soc. géol. du Nord, vol. 34, p. 146, 1905.

[b] See *ante*, p. 292, and also the analyses of igneous rocks given in Chapter XI.

[c] For good summaries relative to the occurrence of economically important phosphates of lime, see R. A. F. Penrose, Bull. U. S. Geol. Survey No. 46, 1888; A. Carnot, Ann. mines, 9th ser., vol. 10, p. 137, 1896; and E. Nivoit, in Fremy's Encyclopédie chimique, vol. 5, sec. 1, pt. 2, p. 83, 1884. All of these memoirs contain numerous analyses, and Penrose gives a bibliography of the subject down to 1888.

[d] See F. K. Cameron and L. A. Hurst, Jour. Am. Chem. Soc., vol. 26, p. 885, 1904. These writers give abundant literature references. See also Cameron and A. Seidell, idem, vol. 26, p. 1454, 1904; vol. 27, p. 1503, 1905. Earlier papers by S. P. Sharples (Am. Jour. Sci., 3d ser., vol. 1, p. 171, 1871) and T. Schlösing (Compt. Rend., vol. 131, p. 149, 1900) may also be noticed.

[e] *Jahrb.* K.-k. geol. Reichsanstalt, vol. 27, Min. Mitth., p. 25, 1877. See also ante, p. 403.

shown that apatite dissolves in carbonated waters, and the fact that the solubility of calcium phosphate is increased by humus acids has been observed by H. Minssen and B. Tacke.[a] C. L. Reese,[b] in a series of experiments upon calcium phosphate, found that it dissolved perceptibly in swamp waters rich in organic matter. Carbonated waters also dissolved it freely, but it was redeposited when the solution was allowed to stand over calcium carbonate. In presence of the carbonate, then, the phosphate would probably not be dissolved, while carbonate could pass into solution. Other salts in solution may assist or hinder the solubility of calcium phosphate, and since natural waters differ in composition the solvent process is necessarily variable. Cameron and Hurst,[c] who studied the solution of iron, aluminum, and calcium phosphate, showed that the process is one of hydrolysis, the solution becoming acid,[d] and less soluble basic phosphates being left behind; that is, the solution contains acid ions, corresponding either to free acid or to acid salts—a condition which must materially affect the action of the liquid upon the substances with which it comes in contact. R. Warington,[e] for example, found that a solution of calcium phosphate in carbonated water was perfectly decomposed by hydroxides of iron and aluminum—a reaction which must often occur in soils. By reactions of this kind, probably, many well-known minerals have been produced; but, since iron compounds occur in natural solutions more largely than salts of aluminum, the iron phosphates are more numerous and more widely distributed. The "blue earth," vivianite, $Fe_3P_2O_8.8H_2O$, for example, is not uncommon in clays; it is found lining belemnites and other fossils at Mullica Hill, New Jersey; and near Edgeville, Kentucky, W. L. Dudley[f] found plant roots almost completely transformed by a process of replacement into this mineral. Other phosphates of iron, commonly found associated with sedimentary beds of limonite, are dufrenite, strengite, phosphosiderite, barrandite, koninckite, cacoxenite, beraunite, ludlamite, calcioferrite, borickite, etc. The aluminum phosphates, omitting several of doubtful character, are wavellite, fischerite, variscite, turquois, callainite, peganite, sphærite, evansite, wardite, and zepharovichite. Most of these minerals are rare species, found in very few localities, and need no further consideration here.[g]

Aluminum phosphates are sometimes formed by the direct action of phosphatic solutions upon igneous rocks, or even upon limestones

[a] Jour. Chem. Soc., vol. 78, pt. 2, p. 618, 1900. Abstract.

[b] Am. Jour. Sci., 3d ser., vol. 43, p. 402, 1892.

[c] Loc. cit.

[d] Apatite gives alkaline reactions. F. K. Cameron and A. Seidell, Jour. Am. Chem. Soc., vol. 27, p. 1510, 1905.

[e] Jour. Chem. Soc., vol. 19, p. 296, 1866.

[f] Am. Jour. Sci., 3d ser., vol. 40, p. 120, 1890.

[g] For details concerning these minerals, see Dana's System of Mineralogy and its supplements. On the varieties of calcium phosphate known as osteolite and staffelite, see A. Schwantke, *Centralbl. Min. Geol. Pal.*, 1905, p. 641.

containing much clay. The source of the phosphates in several such cases may be found in beds of guano deposited by sea fowl upon rocky islets, or by colonies of bats in caves. Guano is rich in phosphatic material, and a number of distinct mineral species have been discovered in guano beds.[a] The following compounds are the best known among them:

Monetite	$HCaPO_4$.
Brushite	$HCaPO_4.2H_2O$.
Metabrushite	$2HCaPO_4.3H_2O$.
Martinite	$2H_2Ca_5(PO_4)_4.H_2O$.
Collophanite	$Ca_2P_2O_7.H_2O$.
Boblerrite	$Mg_2P_2O_8.8H_2O$.
Newberyite	$HMgPO_4.3H_2O$.
Hannaylite	$Mg_2P_2O_8.2H_2NH_4PO_4.8H_2O$.
Struvite	$NH_4MgPO_4.6H_2O$.
Stercorite	$HNaNH_4PO_4.4H_2O$.

Several of these compounds, it will be observed, are acid phosphates, and three of them contain ammonium. Dissolved by atmospheric waters, they react upon the decomposing rocks beneath the guano and produce changes of a notable kind. Where they find limestone, they convert it into calcium phosphate; when they attack igneous rocks, they produce a phosphate of aluminum. The last-named substance may also be formed from the hydroxide of aluminum which is sometimes present in clays. On the islands of Navassa, Sombrero, Mona, and Moneta, in the West Indies,[b] limestones have been thus transformed; the other reaction may be more fully considered now.

On Clipperton Atoll, in the North Pacific, J. J. H. Teall[c] found a phosphatized trachyte, the alteration being clearly due to leachings from guano. A similar alteration of andesite was discovered by A. Lacroix[d] on Pearl Islet, off the coast of Martinique. In both cases feldspars furnished the alumina for the phosphate that was

[a] On the phosphates found in the bat guano of the Skipton Caves, Australia, see R. W. E. McIvor, Chem. News, vol. 55, p. 215, 1887; vol. 85, pp. 181, 217, 1902. McIvor names three of the ammonium-magnesium phosphates—dittmarite, muellerite, and schertelite.

[b] For the Navassa phosphate, see E. V. d'Invilliers, Bull. Geol. Soc. America, vol. 2, p. 75, 1891. W. B. M. Davidson (Trans. Am. Inst. Min. Eng., vol. 21, p. 139, 1892–93) thinks it may be a residual concentration from phosphatic limestone, and not a guano product. For Sombrero, see A. A. Julien, Am. Jour. Sci., 2d ser., vol. 36, p. 424, 1863. For Mona and Moneta, see C. U. Shepard, jr., Am. Jour. Sci., 3d ser., vol. 23, p. 400, 1882. See also S. P. Sharples, Proc. Boston Soc. Nat. Hist., vol. 22, p. 242, 1883, on phosphates from the guano caves of the Caicos Islands, which contain considerable admixtures of calcium sulphate. K. Martin (Zeitschr. Deutsch. geol. Gesell., vol. 31, p. 473, 1879) has described the deposits of phosphate on the island of Bonaire. N. H. Darton (Am. Jour. Sci., 3d ser., vol. 41, p. 102, 1891) and W. H. Dall and G. D. Harris (Bull. U. S. Geol. Survey No. 84, 1892) both regard the phosphates of Florida as possibly due to guano leachings. The same view was also advocated by L. C. Johnson, Am. Jour. Sci., 3d ser., vol. 45, p. 407, 1893. On the Aruba phosphate see G. Hughes, Quart. Jour. Geol. Soc., vol. 41, p. 80, 1885.

[c] Quart. Jour. Geol. Soc., vol. 54, p. 230, 1898.

[d] Bull. Soc. min., vol. 28, p. 13, 1905. Lacroix (Compt. Rend., vol. 143, p. 661, 1906) has also reported an occurrence of phosphatized trachyte on the island of San Thomé, in the Gulf of Guinea. In this case, again, guano was the agent of alteration.

found. Another phosphate of similar character, from the island of Redonda, in the West Indies, was described by C. U. Shepard,[a] but nothing is said of its petrologic origin. Another example, analyzed by A. Andouard,[b] came from the islet of Grand-Connétable, near the coast of French Guiana. All of these represent changes brought about by percolations from bird guano.

In the Minerva grotto, department of l'Herault, France, A. Gautier[c] found brushite, tribasic calcium phosphate, and a phosphate of aluminum to which he gave the name minervite. To this he assigned the formula $Al_2P_2O_8.7H_2O$, but his data seem to have been based on impure material. A later analysis by A. Carnot[d] gives the mineral a very different composition. In the same memoir Carnot described a substance similar to minervite, from a cave near Oran, in Algeria. In this case the phosphatic deposits seem to have been formed by infiltrations from without the cavern, and the same is true of a white, pulverulent substance described by J. C. H. Mingaye[e] from the Jenolan caves in New South Wales. Here no evidence of guano could be found, and Mingaye ascribed the phosphatic solution to leachings of river silt, containing bones or other organic matter, and directly overlying the caves. The analyses are as follows:

Analyses of phosphatic deposits.

A. Clipperton Atoll, Teall.
B. Martinique, analysis by Arsandaux.
C. Redonda, Shepard.
D. Grand-Connétable, Andouard.
E. Minerva Grotto, Carnot.
F. Oran, Carnot.
G. Jenolan caves, Mingaye.
H. Controne, Sicily, Casoria.[f]

	A.	B.	C.	D.	E.	F.	G.	H.
P_2O_5	38.5	41.20	43.20	39.10	37.28	35.17	40.83	37.10
Al_2O_3	25.9	34.20	14.40	25.59	18.59	18.18	20.70	22.89
Fe_2O_3	7.4	.....	16.60	8.03	.83	.....	.20	1.17
MgO	.....	trace	.....	trace	.33	trace	trace	.....
CaO	.....	trace	.57	1.40	1.40	.31	trace	.....
K_2O	.....	.....	.....	.....	8.28	5.80	9.01	8.04
Na_2O	.....	.....	.....	.....	.....	.....	.....	.02
NH_3	.....	.....	.....	.....	.52	.48	.....	.61
F	.....	.....	.....	.....	trace	trace	.....	.....
Cl	.....	.....	.....	trace	trace	trace	.....	.....
SO_3	.....	.....	.....	.06	trace	trace	.....	.....
CO_2	.....	.....	.....	trace	.....	.....	.....	.....
SiO_2	5.0	.....	1.60	1.70	4.35	11.60	.....	.36
Insoluble		.....	.....	.....		.....	1.12	.....
H_2O, 100°	.....	24.50	24.00	[g]21.24	.....	13.40	.....	7.87
H_2O, 180°	.....			.....	23.70	.....	.....	
H_2O, 200°	.....			.....	.....	.....	9.50	[h]21.29
H_2O, ignition	23.0			2.50	4.50	14.80	18.19	
	99.8	99.90	100.37	99.62	99.78	99.74	99.55	99.35

[a] Am. Jour. Sci., 2d ser., vol. 47, p. 428, 1869. See also C. H. Hitchcock, Bull. Geol. Soc. America, vol. 2, p. 6, 1891.

[b] Compt. Rend., vol. 119, p. 1011, 1894.

[c] Ann. mines, 9th ser., vol. 5, p. 1, 1894. Compt. Rend., vol. 116, pp. 928, 1023, 1893.

[d] Ann. mines, 9th ser., vol. 8, p. 319, 1895. Compt. Rend., vol. 121, p. 152, 1895.

[e] Rec. Geol. Survey New South Wales, vol. 6, p. 111, 1899. Mingaye gives analyses of several other phosphates found in these caverns.

[f] The substance named palmerite by E. Casoria (Zeitschr. Kryst. Min., vol. 42, p. 87, 1906) from near Controne, Sicily, is probably identical with minervite. It was found in a layer under bat guano.

[g] At 105°.

[h] *Loss on ignition.*

Although these analyses do not represent pure compounds, they yield approximations to simple formulæ. A, B, and D are not far from variscite, $AlPO_4.2H_2O$. D suggests the analogous barrandite, $(AlFe)PO_4.2H_2O$. Minervite, especially as shown in Mingaye's analysis, probably contains a salt of the composition $H_2KAl_2(PO_4)_3.6H_2O$. To establish any of these formulæ, however, would require much more careful investigation than has hitherto been practicable and upon more homogeneous material.

The phosphates of the Minerva grotto, according to Gautier,[a] were formed by the action of decomposing animal matter upon gibbsite, clay, and limestone. In order to support this opinion, he proved experimentally that solutions of ammonium phosphate, which, as we have seen, may be derived from guano, will produce the required transformations. Gelatinous alumina, digested with ammonium phosphate, gave a crystalline product resembling minervite, and even a clay was altered by the reagent. Siderite, $FeCO_3$, similarly treated with ammonium phosphate, was converted into a salt of the composition $Fe_3(PO_4)_2.6H_2O$; and limestone was found to be transformed into calcium phosphate. That is, a known product of organic decomposition will so act upon mineral substances as to generate phosphates resembling those that were actually found. An outline is thus furnished for a general theory of phosphatization, which is supported both by laboratory investigation and by the observation of natural occurrences. The decaying animal matter, in presence of bones or phosphatic shells, can form soluble phosphates, and the latter acting in solution upon clays, hydroxides, or carbonates, bring about the final transformations.

The larger deposits of calcium phosphate, or phosphorite, are probably all of marine origin. Unlike the crystalline apatite they are amorphous, and may be either compact, earthy, or concretionary. Nodular or pebble forms are common. In composition the purest phosphorites approach apatite, or, more specifically, fluorapatite, $Ca_5(PO_4)_3F$; but some varieties are more nearly the normal tricalcium phosphate, $Ca_3(PO_4)_2$. According to A. Carnot,[b] the concretionary phosphates are deficient in fluorine, while in the sedimentary forms it is present in nearly the apatite ratio. To apparently homogeneous brown grains from the chalk of Ciply, in Belgium, J. Ortlieb[c] assigned the formula $4CaO.2P_2O_5.SiO_2$, regarding the substance as a definite mineral species to which he gave the name ciplyte. Probably hydrates of calcium phosphate, like collophanite, are also present in phosphorite beds. In an Algerian phosphate, G. Schüler[d]

[a] Ann. mines, 9th ser., vol. 5, p. 1, 1894. Compt. Rend., vol. 116, pp. 928, 1023, 1893.
[b] Compt. Rend., vol. 114, p. 1003, 1892.
[c] Ann. Soc. géol. du Nord, vol. 16, p. 270, 1888–89.
[d] Zeitschr. angew. Chemie, 1898, p. 1101.

found chromium, to an average amount of 0.057 per cent of Cr_2O_3. Oxides of iron, alumina, magnesia, calcium carbonate, gypsum, silica, sand, and clay are common impurities. Nitrogenous organic matter is also often present. Some so-called phosphate rocks are merely phosphatized limestones, sandstones, or shales. In certain Cretaceous sandstones of Russia, calcium phosphate occurs as a cement for the sand grains and also in the form of fossil bones and fossil wood. The wood has been completely replaced by phosphate.[a] Although bone is itself largely composed of calcium phosphate, fossil bones are not identical chemically with recent bones. The fossils show an enrichment in calcium carbonate, iron oxide, and fluorine, as A. Carnot[b] has shown, and especially in fluorine. Modern bones, from various animals, were found by Carnot to contain a minimum proportion of fluorine; Tertiary bones were much richer; Triassic and Cretaceous bones still more so; and in bones from Silurian and Devonian formations the ratio of fluoride to phosphate was nearly that of apatite. This progressive enrichment in fluorine Carnot attributes to the agency of percolating waters, carrying small quantities of fluorides in solution. He cites a number of references to the presence of fluorides in mineral springs, and in water from the Atlantic he found fluorine to the extent of 0.822 gram in a cubic meter. Iodine, which is also of oceanic origin, has repeatedly been detected in phosphorites, but the presence of bromine is more doubtful.[c]

The small traces of phosphates which are present in sea water are more or less absorbed into the shells, bones, and tissues of marine animals, and so concentrated to some extent. When the animals die their remains are scattered through the ooze of the sea bottom, and feebly phosphatic deposits are thus formed. The calcium phosphate, however, tends to become still more concentrated, for the carbonate with which it is commingled is more freely soluble, and so is partially removed. This process is assisted by the carbonic acid formed during the decomposition of the animal matter.[d] Some phosphate is also dissolved, but it is in part redeposited around nuclei, such as shells or fragments of bone, forming the phosphatic nodules which are so often found upon the ocean floor.[e] Similar nodules are common in beds of phosphorite and in some localities they constitute its valuable portions. They are also found disseminated in deposits of

[a] See a table of 18 analyses by A. Engelhardt, Claus, P. Latschinow, and P. Kostychew in Revue de géologie, vol. 7, p. 320, 1867–68. The wood, bone, and cement have practically the same composition.

[b] Ann. mines, 9th ser., vol. 3, p. 155, 1893. In a dinosaurian bone from Colorado, L. G. Eakins, in the laboratory of the United States Geological Survey, found 2.12 per cent of fluorine.

[c] See F. Kuhlmann, Compt. Rend., vol. 75, p. 1678, 1872.

[d] See discussion by L. Kruft, Neues Jahrb., Beil. Bd. 15, p. 1, 1902. This memoir relates to the distribution of phosphorite in the older Paleozoic formations of Europe.

[e] See J. Murray and A. F. Renard, Challenger Rept., Deep-sea deposits, pp. 397–400, 1891. Also *ante*, in Chapter IV, p. 104.

greensand, associated with the glauconite which was laid down at the same time. The replacement of calcareous shells by phosphates was clearly traced by A. F. Renard and J. Cornet[a] in their study of the Cretaceous phosphorites of Belgium.

The organic remains which contribute to the formation of phosphorites vary widely as regards richness in phosphates. Bones are the richest; crustacean remains probably come next; mollusks and corals are the poorest. As a rule, molluscan shells and corals consist mainly of calcium carbonate, but some species are highly phosphatic. In a recent lingula, for instance, W. E. Logan and T. S. Hunt[b] found 85.79 per cent of calcium phosphate. The fossil casts of a gasteropod, *Cyclora*, are also, according to A. M. Miller,[c] rich in phosphate. The Cambrian phosphates of Wales are regarded by H. Hicks[d] as derived in large part from crustaceans, a supposition which is borne out by W. H. Hudleston's analyses.[e] The shell of a giant trilobite contained 17.05 per cent of P_2O_5; the shell of a recent lobster yielded 3.26 per cent, and the average amount found in an entire lobster was 0.76 per cent. Where crustacean remains are abundant, the proportion of phosphoric acid ought to be relatively high.

The deposits thus formed by animal remains, upon the bottom of the sea, are at best but moderately phosphatic. A further concentration is effected after the sediments have been elevated into land surfaces, when atmospheric agencies begin to work upon them. First, beds of phosphatic chalk or limestone are formed, from which, by leaching with meteoric or subterranean waters, the excess of calcium carbonate is washed away. The less soluble phosphate then remains as a residuary deposit, more or less impure, and varying much in richness. The beds near Mons, in Belgium, according to F. L. Cornet,[f] were thus derived from phosphatic chalk, from which the calcareous shells have disappeared, while the flints, siliceous sponges, and vertebrate bones are unchanged. According to Chateau[g] the Eocene phosphates of Algeria were concentrated in the same way, from animal and vegetable débris laid down in shallow salt-water lagoons. The beds also show signs of local precipitation of phos-

---

[a] Bull. Acad. Belg., vol. 21, p. 126, 1891.

[b] Am. Jour. Sci., 2d ser., vol. 17, p. 236, 1854.

[c] Am. Geologist, vol. 17, p. 74, 1896.

[d] Quart. Jour. Geol. Soc., vol. 31, p. 368, 1875. On p. 357 of the same journal there is another paper by D. C. Davies on the same region. W. D. Matthew (Trans. New York Acad. Sci., vol. 12, p. 108) has described phosphatic nodules from the Cambrian of New Brunswick.

[e] Quart. Jour. Geol. Soc., vol. 31, p. 376, 1875.

[f] Idem, vol. 42, p. 325, 1886.

[g] Mém. Soc. ingén. civils, August, 1897, p. 193. Analyses of Algerian phosphates, by H. and A. Malbot, are given in Compt. Rend., vol. 121, p. 442, 1895. The phosphorites of Tunis are described by P. Thomas in Bull. Soc. géol., 3d ser., vol. 19, p. 370, 1891. See also O. Tietze, Zeitschr. prakt. Geol., 1907, p. 229, on the phosphates of Tunis and Algeria. Tietze gives numerous references to the literature of these deposits.

phates which had previously been dissolved. So long ago as 1870 this theory of concentration by leaching was proposed by N. S. Shaler[a] to account for the nodular phosphates of South Carolina, and it seems to apply equally well to the other phosphorite deposits of the United States.

The phosphorites of Tennessee, which have been somewhat exhaustively studied,[b] furnish an excellent illustration of the several processes, chemical and mechanical, which have taken part in their formation. As interpreted by Hayes and Ulrich, these phosphorites, which are partly Ordovician and partly Devonian, were first laid down in a shallow sea as phosphatic limestones, deriving their phosphates in all probability from phosphatic mollusks, such as lingula. Some bones and teeth of Devonian fishes are also found in these beds. The limestones then were subjected to the leaching process, which removed carbonates, leaving a mixture of phosphates, clay, and iron hydroxide. The soil thus formed was again concentrated by mechanical washing, the moving waters carrying away the clay and finer silt from the heavier phosphatic nodules. Some phosphates were also dissolved by percolating waters, to be precipitated as a secondary deposit in the underlying limestones, or concentrated in limestone caverns.

The phosphorites of Arkansas,[c] which occur in an interval between the Lower Silurian and "Lower Carboniferous," are probably of similar origin to those of Tennessee. At some localities in Arkansas, however, phosphates occur as bands of pebbles in Cretaceous beds, sometimes associated with greensand. This association and also the neighborhood of manganese ores are strongly suggestive of the similar association of these substances in the deep-sea deposits described by Murray and Renard. The same processes were followed in both the ancient and the modern seas.

---

[a] Proc. Boston Soc. Nat. Hist., vol. 13, p. 222, 1870, and also later in the introduction to R. A. F. Penrose's Bull. U. S. Geol. Survey No. 46, 1888. For other matter relative to the South Carolina phosphates, see O. A. Moses, Mineral Resources U. S. for 1882, p. 504, U. S. Geol. Survey, 1883; P. E. Chazal, Sketch of the South Carolina Phosphate Industry, Charleston, 1904; F. Wyatt, The Phosphates of America, New York, 1891; and C. C. H. Millar, Florida, South Carolina, and Canadian Phosphates, London, 1892. The earlier literature is well summed up in Penrose's bulletin.

[b] See publications of the U. S. Geol. Survey as follows: C. W. Hayes, Sixteenth Ann. Rept., pt. 4, p. 610, 1895; Seventeenth Ann. Rept., pt. 2, p. 539, 1896; Twentieth Ann. Rept., pt. 6, cont., p. 633, 1899; Twenty-first Ann. Rept., pt. 3, p. 473, 1901; and Bull. No. 213, p. 418, 1903. L. P. Brown, Nineteenth Ann. Rept., pt. 6, cont., p. 547, 1898. E. C. Eckel, Bull. No. 213, p. 424, 1903. The latest discussion, by Hayes and E. O. Ulrich, is given in Geologic Atlas U. S., folio 95, 1903. See also T. C. Meadows and L. Brown, Trans. Am. Inst. Min. Eng., vol. 24, p. 582, 1895; Hayes, idem, vol. 25, p. 19, 1896; J. M. Safford, Am. Geologist, vol. 18, p. 261, 1896; and W. B. Phillips, Eng. and Min. Jour., vol. 57, p. 417, 1894.

[c] See J. C. Branner, Trans. Am. Inst. Min. Eng., vol. 26, p. 580, 1896; also Branner and J. F. Newsom, Bull. No. 74, Arkansas Agric. Exp. Sta. The Devonian black phosphates of the Pyrenees, described by D. Levat (Ann. mines, 9th ser., vol. 15, p. 4, 1899), are also comparable with those of Tennessee and Arkansas.

Phosphorites and phosphatic marls are found at many other points in the southeastern parts of the United States, but they probably all originated in the same way, at least so far as chemical processes are concerned. The mechanical transportation of phosphatic silt and its accumulation in hollows or depressions have doubtless happened in many instances, but have no chemical significance. In the Florida field, as described by G. H. Eldridge,[a] every step of phosphorite formation seems to be represented. Phosphates have been concentrated from limestones and also by mechanical washing; they have formed secondary replacements, and some were deposited from solution. The following analyses, hitherto unpublished, were made by George Steiger in the laboratory of the United States Geological Survey, upon material collected by Eldridge. They show the variability of the Florida rock, a variability observed in all other regions.

Analyses of Florida phosphates.

A. From near Sunnyside, Taylor County.
B, C. From Luraville district, Suwanee County.
D. From Albion district, Levy County.

	A.	B.	C.	D.
SiO_2	3.44	5.36	10.63	10.51
TiO_2	.13	.26	.86	.58
Al_2O_3	1.49	5.41	12.42	21.17
Fe_2O_3	1.43	2.86	2.90	3.10
CaO	48.81	42.13	30.93	23.95
MgO	.23	.47	.29	.15
K_2O	trace	none	.20	.40
Na_2O	trace	none	.27	
P_2O_5	35.93	33.37	30.35	25.38
CO_2	2.71	2.15	1.72	2.14
SO_3	.10	.09	.13	.15
F	2.55	2.10	1.95	1.42
H_2O at 105°	.90	1.84	1.27	1.27
Ignition	1.98	4.76	7.69	10.35
	99.70	100.80	101.61	100.57
Less O	1.05	.88	.82	.60
	98.65	99.92	100.79	99.97
Organic C	.....	.18	.12	.22

NOTE.—For other data on American phosphates, see R. A. F. Penrose, Bull. U. S. Geol. Survey No. 46, 1888, and also the following publications: Phosphates and marls of Alabama, E. A. Smith, Bull. No. 2, Geol. Survey Alabama, 1892; and W. C. Stubbs, Mineral Resources U. S. for 1883–84, p. 794, U. S. Geol. Survey, 1885. The Alabama localities yield phosphatic marls and greensands, of Cretaceous age. S. W. McCallie, Phosphates and marls of Georgia, Bull. No. 5-A, Geol. Survey Georgia, 1896. D. T. Day, North Carolina phosphates, Mineral Resources U. S. for 1883–84, p. 788, U. S. Geol. Survey, 1885. M. C.

[a] Trans. Am. Inst. Min. Eng., vol. 21, p. 196, 1893. See also W. B. M. Davidson, idem, p. 139. Eldridge cites a number of incomplete analyses of Florida phosphates by T. M. Chatard, all made in the Survey laboratory. Other papers on the Florida phosphates by E. T. Cox, G. M. Wells, and E. W. Codington, may be found in Trans. Am. Inst. Min. Eng., vol. 25, pp. 36, 163, 423, 1896; also one by N. A. Pratt, in Eng. and Min. Jour., vol. 53, p. 380, 1892.

Ihlseng, Phosphates of Juniata County, Pennsylvania, Seventeenth Ann. Rept. U. S. Geol. Survey, pt. 3, p. 955, 1896.

For phosphorite in Japan, see K. Tsuneto, Chem. Zeitung, vol. 23, pp. 800, 825, 1899. This phosphate occurs in Miocene sandstone, and contains some glauconite. Good analyses are given.

On phosphate rock in New Zealand, see A. R. Andrew, Trans. New Zealand Inst., vol. 38, p. 447, 1905. On Christmas Island, Indian Ocean, E. W. Skeats, Bull. Mus. Comp. Zool., vol. 42, p. 103, 1903. On nodules in eastern Thuringia, J. Lehder, Neues Jahrb., Beil. Bd. 22, p. 48, 1906. On French phosphates, A. Nantier, Compt. Rend., vol. 108, p. 1174, 1889; and H. Lasne, Bull. Soc. géol., 3d ser., vol. 18, p. 441, 1889–90.

FERRIC HYDROXIDES.

An important class of products, derived from the decomposition of rocks, is that which includes the oxides and hydroxides of iron and manganese. The residual deposit of ferric hydroxide, known as laterite, has already been described; other modes of occurrence remain to be considered now.

Several hydroxides of iron have been given definite rank as mineral species. They are:

Turgite	$2Fe_2O_3.H_2O$.	Contains 94.6 per cent Fe_2O_3.
Goethite	$Fe_2O_3.H_2O$.	Contains 89.9 per cent Fe_2O_3.
Limonite	$2Fe_2O_3.3H_2O$.	Contains 85.5 per cent Fe_2O_3.
Xanthosiderite	$Fe_2O_3.2H_2O$.	Contains 81.6 per cent Fe_2O_3.
Limnite	$Fe_2O_3.3H_2O$.	Contains 74.7 per cent Fe_2O_3.

Of these only one, goethite, is crystalline; the others are amorphous, and all sorts of mixtures between them are likely to occur. They are also often admixed with siderite, $FeCO_3$, which is itself an important ore of iron. Other impurities are sand, clay, calcium and magnesium carbonates, aluminum hydroxides, manganese compounds, phosphates, such as vivianite, organic matter, etc. Some of the rarest metals, like gallium, indium, thallium, and rubidium, are also very commonly present in ores of this class, but only in minute traces. They have been detected spectroscopically.[a] From an economic point of view, all of these minerals are grouped together as limonite, for the reason that that species is by far the most abundant and forms large ore bodies.

The processes by which deposits of ferric hydroxide are produced have aleady been partly indicated. Residual deposits may be formed, as in the case of laterite, or as represented by the gossan caps over bodies of sulphide ores. Great outcrops of such ores, especially of pyrite or chalcopyrite, are often altered to a considerable depth into masses of porous limonite. Pseudomorphs of limonite after pyrite are exceedingly common. When sulphides containing iron are thus oxidized, some iron is removed in solution as sulphate, from which

[a] See W. N. Hartley and H. Ramage, Jour. Chem. Soc., vol. 71, p. 533, 1898.

it may be precipitated later as hydroxide. Carbonated waters also extract iron from silicate rocks, or from disseminated magnetite, again forming solutions from which limonite may be deposited. The rusty sediments around chalybeate springs are illustrations of the latter process. Organic acids and humus also assist in the solution of ferrous compounds, and furnish to swamp waters the material from which bog-iron ores are formed. Stagnant swamp waters are often covered by iridescent films of ferric hydroxide, produced by atmospheric oxidation of ferrous carbonate, in visible exemplification of the process described above. The following analysis of a spring water, which rises under a layer of ore at Ederveen, Netherlands, is cited by Van Bemmelen [a] to indicate the source from which the iron oxides were derived. The figures refer to milligrams per liter.

Analysis of spring water at Ederveen, Netherlands.

Ca	107.6	SO_4	0.9
Mg	5.6	H_3PO_4	10.9
Fe	19.6	CO_2	207.6
Mn	11.4	SiO_2	18.0
K	0.9	Organic	56.0
Na	10.0		
Al_2O_3	3.3		467.0
Cl	15.2		

From waters of this kind deposits are formed under swamps and bogs as an impervious hardpan, and also frequently in lakes or ponds. Their formation is sometimes very rapid, and instances are cited by A. Geikie [b] of Swedish lakes, in which layers of bog ore several inches thick accumulated in the course of twenty-six years. According to N. S. Shaler,[c] bog ores are most abundant along the margins of swamps, and often wanting at the centers. When the waters deposit their load in presence of much carbonic acid or decaying organic matter, the carbonate, siderite, is laid down; but where the air has free access limonite is produced. In muddy waters the silt goes down with the iron compounds, forming clay ironstone; and the black band ores of the coal measures represent what was once a carbonaceous mud.[d] In many cases the decomposition of ferrous carbonate solutions is effected or aided by the so-called "iron bacteria," which absorb

[a] J. M. van Bemmelen, C. Hoitsema, and E. A. Klobbie, Zeitschr. anorg. Chemie., vol. 22, p. 337, 1900. Analysis by G. Moll van Charante. The phosphoric acid of the water goes to the formation of vivianite.

[b] Text-book of Geology, 4th ed., p. 187.

[c] Tenth Ann. Rept. U. S. Geol. Survey, pt. 1, p. 305, 1890.

[d] The literature of these ores is very abundant and voluminous. See especially F. M. Stapff, Zeitschr. Deutsch. geol. Gesell., vol. 18, p. 86, 1865; J. S. Newberry, School of Mines Quart., vol. 2, p. 1, 1880; H. Sjögren, Neues Jahrb., 1893, pt. 2, p. 273, ref.; J. H. L. Vogt, Zeitschr. prakt. Geol., 1894, p. 30, and 1895, p. 38; G. Reinders, Verhandel. Akad. Wet. Amsterdam, sec. 2, vol. 5, No. 5; A. Gaertner, Arch. Ver. Mecklenburg, vol. 51, p. 73, 1897; and J. M. van Bemmelen, Zeitschr. anorg. Chemie, vol. 22, p. 313, 1900.

the iron and redeposit it later as ferric hydroxide.[a] These organisms are found in the ground water and the soil. From sulphate solutions the iron may be precipitated by carbonates, phosphates, or organic matter contained in admixed waters. Ferrous sulphate first oxidizes, yielding ferric hydroxide and insoluble basic salts.

Beds of limonite sometimes represent a different mode of origin from those just described. R. A. F. Penrose[b] suggests that in some cases limonite has been derived from glauconite by a process of alteration. It may be formed by pseudomorphous replacement of limestones, when solutions of iron compounds percolate through them.[c] Ferriferous limestones, also, may yield residuary deposits of limonite, the oxidation of ferrous carbonate and the solution of calcium carbonate going on at the same time. The Clinton ores are regarded by A. F. Foerste[d] as formed by the replacement of lime in bryozoan remains; although C. H. Smyth[e] has shown that in the oolitic varieties each spherule is made up of concentric layers around a nucleus of quartz. He argues that the ores were deposited in the shoal waters of the Silurian sea, presumably upon a sandy bottom. The essential process, however, precipitation from solution, whether by oxidation, by organic matter, or by carbonate of lime, is the same in all cases. The iron was dissolved, in the first instance, from ferruginous rocks, and then thrown down by any one of the several reactions indicated.

The precipitated hydroxides of iron vary much in character and appearance, and their exact chemical nature, despite the plausible formulæ assigned to some of the minerals, is by no means clear. In color they range from yellow through various shades of brown and red, and in texture they differ as widely. J. M. van Bemmelen[f] regards them as colloidal complexes of ferric oxide and water, to which chemical formulæ are not properly applicable; and the same view is held by him concerning the humus acids and the so-called ferrohumates.[g] According to P. Nicolardot,[h] however, whose inves-

[a] See Van Bemmelen, loc. cit.; G. Tolomei, Zeitschr. anorg. Chemie, vol. 5, p. 102, 1894; and authorities cited by C. R. Van Hise, Treatise on metamorphism: Mon. U. S. Geol. Survey, vol. 47, p. 826, 1904.

[b] Ann. Rept. Geol. Survey Arkansas, 1892, vol. 1, p. 124. See also L. Cayeux, Compt. Rend., vol. 142, p. 895, 1906.

[c] See J. P. Kimball, Am. Jour. Sci., 3d ser., vol. 42, p. 231, 1891. See also C. W. Hayes, Trans. Am. Inst. Min. Eng., vol. 30, p. 403, 1900; Hayes and E. C. Eckel, Bull. U. S. Geol. Survey No. 213, p. 233, 1903; and S. W. McCallie, Bull. No. 10A, Geol. Survey Georgia, p. 19, 1900, on the iron ores of that State.

[d] Am. Jour. Sci., 3d ser., vol. 41, p. 28, 1891.

[e] Idem, vol. 43, p. 487, 1892.

[f] Rec. trav. chim., vol. 7, p. 106, 1888; vol. 18, p. 86, 1899; Zeitschr. anorg. Chemie, vol. 20, p. 185, 1899; vol. 22, p. 313, 1900; vol. 42, p. 281, 1904. Also J. M. van Bemmelen and E A. Klobbie, Jour. prakt. Chemie, 2d ser., vol. 46, p. 529, 1892.

[g] See also W. Spring, Bull. Acad. Belg., 3d ser., vol. 34, p. 578, 1897, on the relations of humus to iron in natural waters, already cited on p. 430, *ante*. The same subject has recently been discussed by O. Aschan, Zeitschr. prakt. Geol., vol. 15, p. 56, 1907.

[h] Ann. chim. phys., 8th ser., vol. 6, p. 334, 1905. Nicolardot cites many references to former investigations upon the precipitated hydroxides. See also Otto Ruff, Ber. Deutsch. chem. Gesell., vol. 34, p. 3417, 1901.

tigation is most recent, ferric hydroxide exists in at least six modifications, which differ in their physical and chemical properties and in their content of water. They are all, he says, polymers of the simplest hydroxide.

From what has been said in the preceding paragraphs, it is evident that the composition of sedimentary iron ores must range between widely separated limits. They may be mainly ferrous carbonate, either crystalline or amorphous, or principally limonite with all sorts of admixtures of other substances. The following analyses of bog ore, "raseneisenstein," from Ederveen, are given in the memoir by J. M. van Bemmelen, C. Hoitsema, and E. A. Klobbie.[a] These variations are shown in ore from a single locality, and the substances mentioned are mostly crystalline. The Fe_2O_3 represents the amorphous variety.

Analyses of bog ore.

A. By G. Reinders. B. By E. A. Klobbie. C. By F. M. Jäger. D. By C. H. Kettner.

	A.	B.	C.	D.
Fe_2O_3	10.58	2.49	8.0	36.49
$FeCO_3$	20.77	37.70	30.6	6.12
$MnCO_3$	4.04	.67	.....	2.91
$CaCO_3$	2.27	4.46	4.0	4.10
$MgCO_3$	.17	.10	.....	.21
$Fe_3(PO_4)_2$	4.30	.....	2.9	5.47
$Fe'''PO_4$	.....	1.75	.....	1.76
$CaSO_4$	.07	.....	.....	.....
Al_2O_3	.93	.21	.....	.60
KCl	.03	trace	.....	trace
NaCl	.23	trace	.....	trace
Soluble SiO_2	49.30	.82	49.1	6.30
Sand		50.02		19.30
Organic matter	1.57	.03	1.8	1.20
H_2O at 100°	3.68	.95	3.3	12.10
H_2O, ignition	2.06	1.12		4.00
	100.00	100.32	99.7	100.56

The subjoined analyses of limonitic bog iron from Mittagong, Australia, are cited by A. Liversidge.[b] They are quite different from those shown in the preceding group.

Analyses of Australian bog ores.

	E.	F.	G.	H.
Fe_2O_3	68.37	57.61	74.71	65.84
Al_2O_3	4.63	24.30	3.04	4.49
MnO	trace	6.41	trace	1.40
MgO	trace	trace	.43	.48
CaO	trace	trace	trace	trace
SiO_2	14.10	.....	10.10	14.27
P_2O_5	trace	trace	trace	.25
SO_3	trace	trace	trace	.11
H_2O, hygroscopic	3.00	1.20	2.20	2.30
H_2O, combined	9.72	10.38	9.70	10.86
	99.82	99.90	100.18	100.00

[a] Zeitschr. anorg. Chemie, vol. 22, p. 319, 1900.

[b] Minerals of New South Wales, p. 99. The analyses were made by the "government analyst."

MANGANESE ORES.

Manganese, like iron, is also dissolved out from the crystalline rocks, in which it is almost invariably present, and by the same agencies. It may go into solution as sulphate, or as carbonate, to be redeposited as carbonate, oxide, or hydroxide, under various conditions and in a variety of forms. A deposition as dioxide, hydrous or anhydrous, is very common and is often seen in the dendritic infiltrations which occur in many rocks and in the black coatings which sometimes cover river pebbles or surround manganiferous mineral springs. Nodules consisting chiefly of manganese dioxide are abundant on the bottom of the deep sea, as described in a previous chapter,[a] and similar nodular forms have been observed that were of recent terrestrial origin. May Thresh [b] discovered small hard black nodules resembling seeds in the bowlder clay of Essex, England; and similar bodies were found by W. M. Doherty [c] on the surface of the ground in Australia.

Manganese differs from iron, however, in its degrees of oxidation. Ferrous oxide and hydroxide, as such, are unknown in nature; but manganosite, MnO, and pyrochroite, $Mn(OH)_2$, are well-known minerals. Manganite, $Mn_2O_3.H_2O$, corresponds in type with goethite and diaspore; and hausmannite, Mn_3O_4, is the equivalent of magnetite, although the two species are crystallographically unlike. Polianite and pyrolusite, two crystallized forms of the dioxide, MnO_2, are not matched by any compound of iron, and this oxide forms the chief manganese ore. The hydrous psilomelane, of variable composition and uncertain constitution, is often associated with pyrolusite, and allied to it are many varieties which have received distinct names. These latter ores are amorphous,[d] and probably represent colloidal complexes, such as were mentioned in connection with the sedimentary ores of iron. The following analyses represent substances in this class, ranging from the crystalline pyrolusite to the earthy wad, or bog manganese, the cupriferous lampadite, etc.:

Analyses of manganese ores.

A. Pyrolusite, Crimora mine, Augusta County, Virginia. Analysis by J. L. Jarman, Am. Chem. Jour., vol. 11, p. 39, 1889.

B. Psilomelane, near Silver Cliff, Colorado. Analysis by W. F. Hillebrand, Bull. U. S. Geol. Survey No. 220, p. 22, 1903.

C. Psilomelane, Romanèche, France. Analysis by A. Gorgeu, Bull. Soc. min., vol. 13, p. 23, 1890. Partly recalculated from the original.

D. Wad. Romanèche, France. Analysis by Gorgeu,[e] idem, p. 27. Partly recalculated.

---

[a] See p. 102, *ante*.

[b] Jour. Chem. Soc., vol. 82, pt. 2, ref. 567, 1902.

[c] Rept. Australasian Assoc. Adv. Sci., 1898, p. 339.

[d] According to A. Gorgeu (Bull. Soc. min., vol. 13, p. 27, 1890), the variety known as wad is sometimes crystallized.

[e] Gorgeu gives many analyses of natural oxides and hydroxides of manganese. See Bull. Soc. min., vol. 13, p. 21, 1890; vol. 16, pp. 96, 133, 1898. Also Bull. Soc. chim., 3d ser., vol. 9, pp. 496, 650, 1893.

E. Varvicite, Austinville, Wythe County, Virginia. Analysis by P. H. Walker, Am. Chem. Jour., vol. 10, p. 41, 1880.

F. Lampadite, or lepidophaeite, Kamsdorf, Thuringia. Analysis by Jenkins, for A. Weisbach, Neues Jahrb., 1880, pt. 2, p. 109. This mineral shows exceptionally high hydration.

	A.	B.	C.	D.	E.	F.
MnO_2	95.88	76.18	66.88	64.98	68.86	58.77
MnO	.....	5.71	8.22	7.27	7.51	9.59
Fe_2O_3	.62	.34	1.45	1.10	2.23	.....
Al_2O_3	.....	1.81	.....			.....
PbO	.....	.....	.10	.30	.....	.....
CuO	.....	.....		trace	.....	11.48
NiO	.22	.....	.....	.....	.....	.....
CoO	.27	trace	.....	trace	.....	.....
ZnO	.....	2.80	trace	trace	.....	.....
CaO	.09	.83	.40	1.65	.....	.....
BaO	.....	.....	16.20	15.45	14.42	.....
MgO	.....	.29	.20	trace	.....	.....
K_2O	.18	3.46	.10	trace	.....	.....
Na_2O	.23	.81		.80	.....	.....
H_2O-	2.08	1.41	4.65	5.00	5.08	21.05
H_2O+		3.94				
P_2O_5	.....	.....	trace	.05	.....	.....
As_2O_5	.....	.....	1.50	.60	.....	.....
Sb_2O_5	.....	.12	.....	.....	.....	.....
$CaSO_4$	.....	.....	.....	.40	.....	.....
SiO_2	.....	2.30	.25	.80	1.98	.....
Insoluble	.29	.....	.15	1.40	.....	.....
	99.86	100.00	100.10	99.80	100.08	100.89

Asbolite is an earthy psilomelane containing much cobalt, which is a common impurity in manganese ores. Barium, as shown in the analyses, is also a frequent constituent of them. How far these admixtures can be ascribed to the formation of manganites, salts of manganous acid, is uncertain, but that is their common interpretation.

These sedimentary ores, and the similar ores produced by the alteration of manganiferous minerals, have diverse origins. F. R. Mallet [a] has observed lateritic pyrolusite or psilomelane as an integral portion of some Indian laterites. The manganese ores of Queluz, Brazil, according to O. A. Derby,[b] are residual deposits derived from rocks in which manganese garnet was the most constant and characteristic silicate. Bog or swamp deposits are common, and so, in short, the sedimentary and residual ores of iron are very fully paralleled. Only the gossan ores have no true manganic equivalent. The sulphides of manganese are relatively rare, and their oxidation products occur only in sporadic cases.[c]

[a] Rec. Geol. Survey India, vol. 12, p. 99, 1879; vol. 16, p. 116, 1883.

[b] Am. Jour. Sci., 4th ser, vol. 12, p. 18, 1901.

[c] A very full monograph on manganese ores, by R. A. F. Penrose, forms vol. 1 of the Annual Report of the Arkansas Geological Survey for 1890. See also an article by Penrose, Jour. Geol., vol. 1, p. 356, 1893. J. D. Weeks has reported on the manganese deposits of the United States in Mineral Resources U. S. for 1892, p. 171, U. S. Geol. Survey, 1893. T. L. Watson (Trans. Am. Inst. Min. Eng., vol. 34, p. 207, 1904) has described the manganese ores of Georgia. The manganese ore of Golconda, Nevada, which contains tungsten, is interpreted by Penrose (Jour. Geol., vol. 1, p. 275, 1893) as probably a spring deposit. On the carbonate ores of Las Cabesses, in the Pyrenees, see C. A. *Moreing, Trans.* Inst. Min. Met., vol. 2, p. 250, 1894. See also J. H. L. Vogt, Zeitschr. *prakt. Geol., 1906*, p. 217, for an elaborate paper on bog manganese.

Manganese and iron, then, are dissolved out from the rocks by the same reagents, at the same time, and in essentially the same way. They are redeposited under similar conditions, but not absolutely together, for a separation is more or less perfectly effected. True, nearly all limonites contain some manganese, and nearly all psilomelanes contain some iron; but in very many cases the ores of the two metals are thrown down separately. How is the separation brought about? To this question various answers have been suggested, but only two or three of them have any modern significance.

According to C. R. Fresenius,[a] who has analyzed the deposits formed by the warm springs of Wiesbaden, the iron is precipitated first as ferric hydroxide. The manganese of the water remains in solution much longer as bicarbonate, and is finally laid down as carbonate as an impurity in calcareous sinter; that is, solutions of manganese carbonate are more stable than solutions of ferrous carbonate, and the manganese is therefore carried farther. A partial separation of the two metals, from the same solution, is thus effected.

The thermochemical arguments of L. Dieulafait[b] are quite in harmony with the foregoing observations, and, indeed, help to explain them. These arguments rest upon the general principle that when several reactions may conceivably take place, that one which is attended by the greatest evolution of heat will occur. The thermochemical equations used by Dieulafait are as follows:

$$2FeO+O=Fe_2O_3+26.6 \text{ Cal.}$$
$$2MnO+2O=2MnO_2+21.4 \text{ Cal.}$$

Hence, if oxygen acts on a mixture of FeO and MnO, or upon substances equivalent to them, ferric oxide will form first and be the more stable.

$$FeO+CO_2=FeCO_3+5.0 \text{ Cal.}$$
$$MnO+CO_2=MnCO_3+6.8 \text{ Cal.}$$

When carbon dioxide unites with these oxides, then, the manganese compound will form first and be the more stable. If oxygen and carbon dioxide act together in considerable excess, Fe_2O_3 and MnO_2 will both be formed; but if they act slowly, in small quantities, the oxygen will go to produce Fe_2O_3, and $MnCO_3$ can be generated at the same time. The manganese carbonate, being somewhat soluble, may then be separated from the ferric oxide by leaching, either to be deposited as carbonate, or perhaps to be oxidized to MnO_2 and CO_2 later.

[a] Cited by G. Bischof, Lehrb. chem. phys. Geol., 2d ed., vol. 1, p. 540.
[b] Compt. Rend., vol. 101, pp. 609, 644, 676, 1885.

In the last of Dieulafait's papers he gives the heat of formation of several manganese compounds:

$Mn+S$,	22.6 Cal.
$Mn+O$,	47.4 Cal.
$Mn+O+CO_2$,	54.2 Cal.
$Mn+O_2$,	58.1 Cal.

From these figures it appears that the dioxide is the most stable compound in the series; it is therefore the easiest formed, and is the principal manganese ore. The thermochemical and geological data are in complete harmony.

It is more than probable, as F. P. Dunnington[a] has shown, that manganese sulphate plays an important part in the separation of the two metals. He has proved, experimentally, that acid solutions of ferrous sulphate, such as are formed by the oxidation of pyrites, will dissolve manganese oxides to a very marked extent. At the same time ferric sulphate and ferric hydroxide, under favorable conditions, may also be formed. In contact with manganese carbonate, in presence of air, ferrous sulphate is rapidly oxidized, producing manganese sulphate, ferric hydroxide, and carbon dioxide. Both sulphates of iron react with calcium carbonate, and the ferric salt generates carbon dioxide, ferric hydroxide, and calcium sulphate. Manganese sulphate acts but little, if at all, upon calcium carbonate, if protected from access of air; in presence of air, however, manganese oxide is gradually formed.

From these reactions it is easy to see that limestones may be important factors in the separation of manganese and iron. Where sulphates of the two metals percolate through limestones, the iron will be by far the more easily precipitated, while the manganese will remain in solution until it is exposed to both air and calcium carbonate simultaneously.

[a] Am. Jour. Sci., 3d ser., vol. 36, p. 175, 1888.

CHAPTER XIII.

SEDIMENTARY AND DETRITAL ROCKS.

SANDSTONES.

By pressure, or by the injection of cementing materials, the products of rock decomposition may be reconsolidated. From the sands sandstones are formed; from the clays, shales are derived; and calcareous deposits yield the limestones. These rocks shade into one another, through intermediate gradations, and exhibit the same variations in composition that are observed in sands and soils. Their classification depends upon their typical forms, and their modifications are indicated by a simple nomenclature. Such terms as calcareous sandstone, argillaceous limestone, and sandy shale explain themselves, for they are clearly descriptive. Although not rigorous, they are sufficient for most practical purposes.[a]

A sandstone differs chemically from a sand chiefly in the addition of a cementing substance. This is furnished by percolating waters, or else, in certain cases, by the slight solution of the moist surfaces of mineral particles in contact with one another. Any substance which the waters can deposit in a relatively insoluble condition may serve as a cement. Such substances as silica, calcium carbonate, hydroxides of iron and aluminum, calcium sulphate, phosphate, and fluoride, barium sulphate, etc., fulfill this condition. Clay and bituminous substances also act as cementing materials. The additions thus made to a sand may be small in amount or even very large, sometimes equaling in quantity the cemented particles. Such an extreme case is furnished by the well-known Fontainebleau calcites, which have crystallized around sand and contain sometimes 50 per cent of calcium carbonate. A. von Morlot [b] reports crystals from this locality containing 58 per cent of sand, and others with as high as 95 per cent. Analogous crystals from the badlands of South Dakota, described by S. L. Penfield and W. E. Ford,[c] contain approximately 40 per cent of calcite to 60 per cent of sand. These are mixtures of sand and calcite in which the crystalline form of the latter has been

[a] On a classification of the sedimentary rocks, see A. W. Grabau, Am. Geologist, vol. 33, p. 228, 1904.

[b] Haidinger's Berichte, vol. 2, p. 107, 1846–47.

[c] Am. Jour. Sci., 4th ser., vol. 9, p. 352, 1900.

perfectly developed. Gypsum crystals containing sand up to 48.58 per cent have been found on the Astrakhan steppe, according to B. Doss,[a] who also mentions gypsiferous sandstones. As a rule, however, the cementing material of a sandstone is quite subordinate. Between a sand and a sandstone the difference in composition is generally slight, and may be almost inappreciable.

When silica serves as the cementing substance, it may assume either the amorphous or the crystalline form. In the latter case the quartz fragments often exhibit a secondary enlargement and become the nuclei of distinct quartz crystals.[b] As amorphous silica it simply fills the interstitial spaces of the rock and binds the sand grains together. These spaces or pores vary in magnitude, and may make up a considerable portion of the total volume of a rock. According to C. R. Van Hise,[c] in a bed of sand of equal spherical grains, the minimum pore space amounts to 24 per cent, and the actual space is usually much greater. The character of the rock produced by the consolidation of such a bed will obviously depend upon the extent to which the cementing material has filled the interstitial spaces. One sandstone is loosely compacted, another is solid, and by thorough silicification the rock may become transformed into a hard, vitreous quartzite. In an ordinary sandstone the fracture is around the grains; in a quartzite it is just as likely to be across them.

After silica, and often with silica, the commonest cements of sandstone consist of carbonates.[d] Calcium carbonate is the most abundant salt derivable from percolating waters, and is easily deposited therefrom; hence its frequency in the sediments, even in those which are not laid down in contiguity to limestones. Calcareous sandstones are exceedingly common, and at the other end of the series arenaceous limestones are not rare. The following analysis of a greenish sandstone from Lohne, Westphalia, by W. von der Marck,[e] may illustrate the complexity of these mixtures.

---

[a] Zeitschr. Deutsch. geol. Gesell., vol. 49, p. 143, 1897.

[b] See A. Knop, Neues Jahrb., 1874, p. 281; A. S. Törnebohm, Neues Jahrb., 1877, p. 210; H. C. Sorby, Quart. Jour. Geol. Soc., vol. 36, Proc., p. 46, 1880; A. A. Young, Am. Jour. Sci., 3d ser., vol. 24, p. 47, 1882; R. D. Irving and C. R. Van Hise, Bull. U. S. Geol. Survey No. 8, 1884; Irving, Fifth Ann. Rept. U. S. Geol. Survey, p. 218, 1885. "Crystallized sands" from Peru are mentioned by L. Crosnier, Ann. mines, 5th ser., vol. 2, p. 5, 1852; and A. Daubrée (Études synthétiques de géologie expérimentale, pp. 226–230) cites a number of European examples.

[c] Treatise on metamorphism: Mon. U. S. Geol. Survey, vol. 47, p. 863, 1904.

[d] Calcium carbonate, up to nearly 30 per cent, is the cementing substance of the sandstone reefs found on the coast of Brazil. See the important monograph by J. C. Branner, which forms vol. 44 of the Bull. Mus. Comp. Zool., 1904. Branner mentions similar reefs in the Levant.

[e] Verhandl. Naturhist. Ver. preuss. Rheinlande u. Westphalens, vol. 12, p. 269, 1855. Many other similar analyses are given. G. Bischof (Lehrb. chem. phys. Geol., 2d ed., vol. 3, pp. 137–149) gives abundant data upon the cementing materials of sandstones. In analyses of these rocks it is commonly assumed that the portion soluble in hydrochloric acid belongs wholly to the cement. This is probably true in most cases, but not *always*. Soluble minerals may occur in a sandstone among its granular components.

Analysis of sandstone from Westphalia.

Soluble portion	$CaCO_3$	39.50
	$MgCO_3$	7.23
	$FeCO_3$	7.54
	$Ca_3P_2O_8$	3.90
	Fe_2O_3	.82
	Al_2O_3	2.12
Insoluble portion	SiO_2	36.65
	Al_2O_3	.91
	K_2O	.03
	H_2O	.62
		99.32

In this analysis calcium phosphate appears among the cementing substances, and many other examples of its occurrence under like conditions are known. Phosphatic sandstones from Perry County, Tennessee, have been described by C. W. Hayes,[a] and also a phosphatic breccia. In these rocks the calcium phosphate forms the matrix of the sand grains. In a brown sandstone from Kursk, Russia, C. Claus[b] found 13.60 per cent of P_2O_5, equivalent to 22.64 of $Ca_3P_2O_8$. In the same sandstone 4.98 per cent of calcium fluoride was also present. Calcium fluoride has also been reported by W. Mackie[c] as a cementing material in a Triassic sandstone from Elginshire, Scotland—in one case up to 25.88 per cent. These figures, of course, represent exceptional samples—concentrations, so to speak; in ordinary cases the cementing compounds are found in small amounts.

Barium sulphate has repeatedly been observed as a cement in sandstones. F. Clowes[d] has described specimens containing from 28.20 to 50.06 per cent of $BaSO_4$. Clowes suggests that the barite was probably formed in situ, by double decomposition between barium carbonate and sulphates contained in percolating waters. Barium has often been detected in the waters of mineral springs.[e] The barytic sandstones, so far as they have been described, are remarkably durable, because of the insoluble character of the cement. Calcareous sandstones are easily disintegrated by weathering, for the carbonates are readily dissolved by atmospheric waters.

Apart from the cements, sandstones vary in composition exactly as do the sands. A sandstone may be nearly pure quartz, or quartz and feldspar, or micaceous, or glauconitic, and it can exhibit any texture from the finest to the coarsest. Textural differences, how-

[a] Seventeenth Ann. Rept. U. S. Geol. Survey, pt. 2, pp. 527, 539, 1896.

[b] Jahresb. Chemie, 1852, p. 980.

[c] Rept. Brit. Assoc. Adv. Sci., 1901, p. 649.

[d] Proc. Roy. Soc., vol. 46, p. 363, 1889; vol. 64, p. 374, 1899. See also W. Mackie, Rept. Brit. Assoc. Adv. Sci., 1901, p. 649; C. B. Wedd, Geol. Mag., 1899, p. 508; and C. C. Moore, Proc. Liverpool Geol. Soc., vol. 8, p. 241, 1898. Moore gives several good analyses of sandstones. In some of them small amounts of cobalt and nickel were found.

[e] See *ante*, p. 160. See also R. Delkeskamp, Notizbl. Ver. Erdkunde, 4th ser., Heft 21, p. 47, 1900. A. E. Reuss (Lotos, vol. 3, p. 72, 1853) has reported barite crystals inclosing much sand, and therefore analogous to the Fontainebleau calcites.

ever, do not concern the chemist. From a chemical point of view it is immaterial whether the sand grains are coarse or fine, rounded or angular. Such rocks as conglomerates, breccias, arkoses, graywackes, etc., have no distinct chemical peculiarities; they are made up of detrital material, and vary from their parent formations only in the extent to which their component fragments have been decomposed and in the nature of their cementing substances. Any sand or detritus may be reconsolidated by any one of the cements above mentioned. When a mixture of sand and clay consolidates, it may form an argillaceous sandstone or a sandy shale, according to the relative proportions of the two ingredients. In such a sandstone the colloidal substances of the admixed clay appear to act as binders, their function being somewhat different from that of the cements deposited by solutions. Their binding power is probably, in most cases, reinforced by the addition of true cements, usually either calcium carbonate or silica. By secondary reactions, due to additions of this kind, the clay substances may be transformed into other things, as shown in the graywacke of Hurley, Wisconsin.[a] This is a detrital rock, which originally consisted largely of quartz and feldspar, with a little hornblende, and dark fragments of older rock material, held together by clay. In the graywacke the clay has been transformed into what is principally a chlorite, with secondary quartz and some other minor minerals. The cement, which was at first amorphous, is now entirely crystalline. Metasomatic changes of this order are very common, and the reactions which can occur are many. With different detritus, different cements, and different salts in the circulating waters, a vast number of transformations are possible. On this subject it would be difficult to generalize.

In a microscopic study of about 150 psammites, as rocks of the sandstone class are sometimes called, G. Klemm[b] identified the following substances among their components: Quartz, feldspars, micas, iron ores, zircon, rutile, apatite, tourmaline, garnet, titanite, augite, hornblende, opaline silica, glauconite, carbonates of calcium, magnesium and iron, rock fragments, clastic dust, and clay. Even this list is probably far from being exhaustive. An arkose sandstone from the quicksilver region of California, made up of granitic detritus, was found by G. F. Becker[c] to contain quartz, orthoclase, oligoclase, biotite, muscovite, hornblende, titanite, rutile, tourmaline, and apatite. In short, all of the rock-forming minerals which can in any way

[a] Described by W. S. Bayley in Bull. U. S. Geol. Survey No. 150, p. 84, 1898. Compare C. R. Van Hise, Am. Jour. Sci., 3d ser., vol. 31, p. 453, 1886, for data concerning other similar rocks in the same region.

[b] Zeitschr. Deutsch. geol. Gesell., vol. 34, p. 771, 1882.

[c] Mon. U. S. Geol. Survey, vol. 13, p. 59, 1888. Several other sandstones are described by J. S. Diller in Bull. U. S. Geol. Survey No. 150, pp. 72–84, 1898.

survive the destruction of a rock may be found in its sands, and therefore in the sandstones. The feldspars and ferromagnesian minerals, however, are quite commonly altered or even removed, the more stable minerals, like quartz, being much more persistent. Quartz is the most abundant mineral in these rocks, while in rocks of the crystalline and eruptive classes it is subordinate to the feldspars.

The following analyses, which, with one exception, were all made in the laboratory of the United States Geological Survey, will suffice to show the general composition of the sandstones:[a]

Analyses of sandstones.

A. Potsdam sandstone, Ablemans, Wisconsin. Analysis by E. A. Schneider. Described by J. S. Diller, Bull. U. S. Geol. Survey No. 150, p. 80, 1898. Nearly pure quartz.

B. Brown sandstone, Hummelstown, Pennsylvania. Analysis by Schneider. Described by Diller, op. cit., p. 77. Composed chiefly of quartz, with some feldspar, kaolin, etc. The cement is iron oxide.

C. Ferruginous sandstone, "carstone," from Hunstanton, Norfolk, England. Analysis and description by J. A. Phillips, Quart. Jour. Geol. Soc., vol. 37, p. 6, 1881. Consists of quartz grains cemented by brown iron ore, with very little feldspar and mica. Phillips also gives five other analyses of British sandstones.

D. From a "sandstone dike" in Shasta County, California. Analysis by T. M. Chatard. Described by J. S. Diller, Bull. Geol. Soc. America, vol. 1, p. 411, 1889. Made up of quartz, feldspar, and biotite, with a calcite cement. Contains also serpentine, titanite, magnetite, and zircon.[b]

E. Miocene sandstone, Mount Diablo, California. Analyzed and described by W. H. Melville, Bull. Geol. Soc. America, vol. 2, p. 403, 1890.

F. Composite analysis of 253 sandstones. By H. N. Stokes.

G. Composite analysis of 371 sandstones used for building purposes. By H. N. Stokes.

H. Graywacke, Hurley, Wisconsin. Analysis by H. N. Stokes. Described by W. S. Bayley, Bull. U. S. Geol. Survey No. 150, p. 84, 1898. Contains quartz, feldspars, iron oxides, and probably kaolin. In the cement are chlorite, quartz, magnetite, pyrite, rutile, sometimes biotite, and either muscovite or kaolin.

	A.	B.	C.	D.	E.	F.	G.	H.
SiO_2	99.42	88.13	49.81	48.13	44.54	78.66	84.86	76.84
TiO_2	.....	.....	.....	.24	.....	.25	.41	.....
Al_2O_3	.31	5.81	5.17	11.19	12.63	4.78	5.96	11.76
Fe_2O_3		1.77	29.17	1.25	2.50	1.08	1.39	.55
FeO	.....	.31	.35	1.47	3.08	.30	.84	2.88
MnO	.....	.....	.....	.29	.44	trace	trace	trace
CaO	.....	.20	2.43	16.39	14.65	5.52	1.05	.70
SrO	.....	.....	.....	.....	.....	trace	none	.....
BaO	.....	.....	.....	.04	.....	.05	.01	.....
MgO	.....	.53	.95	2.22	5.55	1.17	.52	1.39
Na_2O	.....	.06	.84	2.29	3.35	.45	.76	2.57
K_2O	.....	2.63	.48	1.17	1.37	1.32	1.16	1.62
Li_2O	.....	.....	.....	.....	.....	trace	trace	.....
H_2O-	.18	.23	3.85	.78	1.43	.31	.27	1.87
H_2O+		.26	6.56	1.78	2.25	[c] 1.33	[c] 1.47	
P_2O_5	.....	.....	.42	.14	.29	.08	.06	.....
CO_2	.....	.....	.....	12.73	7.76	5.04	1.01	.....
SO_3	.....	.....	.....	.....	.....	.07	.09	.....
Cl	.....	.....	.....	.....	.....	trace	trace	.....
	99.91	99.93	100.03	100.11	99.84	100.41	99.86	100.18

[a] For additional analyses, see Bull. U. S. Geol. Survey No. 228, pp. 291–296, 1904. W. Wallace (Proc. Phil. Soc. Glasgow, vol. 14, p. 22, 1883) and W. Mackie (Trans. Edinburgh Geol. Soc., vol. 8, pp. 58, 59, 1899) give a number of good analyses of Scottish sandstones. See also C. C. Moore, Proc. Liverpool Geol. Soc., vol. 8, p. 241, 1898, for English examples.

[b] Other "sandstone dikes" near Pikes Peak, Colorado, have been described by W. Cross. They probably represent quicksands which were injected into fissures.

[c] Includes organic matter.

A peculiar rock, which is sometimes called a calcareous sandstone, is the *gaize* of the French geologists. It has been fully described by L. Cayeux [a] as a siliceous rock, rich in the débris of siliceous organisms, containing quartz and glauconite cemented by opal and clay, with sometimes chalcedony, and very little carbonate of lime. The silica in gaize ranges from 76 to 92 per cent, and a large part of it, 75.3 per cent in the maximum, is soluble in caustic alkalies. It is, as defined by Cayeux, a sedimentary rock consisting largely of nonclastic silica, and seems to have been originally a marine ooze.

FLINT AND CHERT.

It is at once evident that a considerable variety of rocks may be formed from siliceous oozes, such as the radiolarian and diatomaceous oozes of the *Challenger* expedition. These fine sediments may be mixed with more or less clay, sand, or calcareous matter, shading, when consolidated, into shales, sandstones, or siliceous limestones. Their geological relations and their content of amorphous or opaline silica must be depended upon to define them. In the same category we must place infusorial earth, which consists mainly of the siliceous remains of diatoms; and such rocks as flint, chert, and novaculite fall in some cases, if not always, under this general classification. With some exceptions these rocks are commonly of organic origin. The novaculite of Arkansas, however, has been differently interpreted.[b] It is regarded by L. S. Griswold as a siliceous sediment or silt; in other words, as sandstone of extremely fine grain. No organisms could be positively detected in it, nor does it contain any appreciable amount of soluble silica. It is, according to Griswold, essentially a shale minus the argillaceous component, and it forms part of a sedimentary series in which all gradations from shale to novaculite occur. F. Rutley,[c] however, dissents from Griswold's views, and has sought to show that the novaculite is a siliceous replacement or pseudomorph after limestone or dolomite. It has also been regarded as a chemical precipitate, analogous to siliceous sinter. In composition the novaculite is very nearly pure silica.

The much commoner variety of compact silica known as chert has also been diversely interpreted. A number of writers,[d] studying chert from different localities, have argued in favor of the replacement

[a] Mém. Soc. géol. du Nord, vol. 4, pt. 2, 1897. Several incomplete analyses of gaize are given. The determination of amorphous silica by its solubility in caustic alkalies, it must be observed, is not very accurate. Silica in any form will dissolve, the rate of solution depending upon the fineness of its subdivision, and the concentration of the alkali. Opaline silica, however, dissolves rapidly in weak alkali, and so can be roughly estimated. Quartz dissolves very slowly.

[b] See Griswold's monograph on this rock (Rept. Arkansas Geol. Survey, 1890, vol. 3) and a paper by the same author in Proc. Boston Soc. Nat. Hist., vol. 26, p. 414, 1894. Compare also O. A. Derby, Jour. Geol., vol. 6, p. 366, 1898; and J. C. Branner, idem, p. 368. Branner sums up very concisely the different theories which have been advanced to account for rocks of this character.

[c] Quart. Jour. Geol. Soc., vol. 50, p. 380, 1894.

[d] E. Hull and E. T. Hardman, Sci. Trans. Roy. Dublin Soc., new ser., vol. 1, pp. 71, 85, 1878, on the Carboniferous cherts of Ireland; A. Renard, Bull. Acad. Belg., vol. 46, p. 471, 1878, on the phthanites of Belgium; T. Rupert Jones, Proc. Geol. Assoc. London, vol. 4, p. 439, 1876; and others.

theory. That the replacement of calcium carbonate by silica is possible, no one can deny, for silicified shells and corals are common. The pseudomorphs of chalcedony or opal after coral, from Tampa Bay, Florida, are conspicuous examples of this change. Furthermore, A. H. Church[a] has effected the transformation artificially. A piece of recent coral was almost completely silicified, losing nearly all its carbonate of lime, when an aqueous solution of silica was allowed to filter through it very gradually. Some chert, then, may have been formed in this way.

On the other hand, chert and flint often exhibit evidences of organic derivation. The radiolarian cherts of California, described by A. C. Lawson, C. Palache, and F. L. Ransome,[b] are principally composed of radiolarian remains. Lawson regards these cherts as having been formed by precipitations of colloidal silica from submarine springs, which produced a sort of ooze in which the radiolaria became embedded. In other cases cherts were probably derived from sponges, whose spicules consist very largely of opaline silica.[c] Cherts crowded with these spicules have been described by various authors, especially by W. J. Sollas[d] and G. J. Hinde.[e] Hinde studied especially the cherts of the Greensand formation in southern England, the cherts of Spitzbergen, and also the Irish cherts, described by Hull and Hardman. In all of them the sponge spicules were abundant. The same thing is true of the flint nodules found in chalk, which almost invariably show signs of a similar origin.[f] In order to account for these nodules, Sollas suggests that sponge spicules accumulated in a calcareous ooze, where, in presence of sea water under pressure, they partly dissolved. The silica thus taken into solution was later reprecipitated around suitable nuclei, at the same time replacing carbonate of lime. It is possible, however, as A. A. Julien[g] has shown, that the organic matter of the decaying sponges may have exerted much influence in bringing about the solution of silica. It is difficult to see how the nodules could have developed except from silica which had been first dissolved. Their growth around organic nuclei can hardly be explained otherwise.

Sedimentary rocks consisting almost entirely of silica may originate in divers ways. As siliceous sinter[h] the silica is simply a

[a] Jour. Chem. Soc., vol. 15, p. 107, 1862.

[b] Lawson, Fifteenth Ann. Rept. U. S. Geol. Survey, p. 420, 1895; Lawson and Palache, Bull. Dept. Geology, Univ. California, vol. 2, pp. 354, 365, 1902; Ransome, idem, vol. 1, p. 193, 1894.

[c] See Thoulet, Bull. Soc. min., vol. 7, p. 147, 1884.

[d] Ann. and Mag. Nat. Hist., 5th ser., vol. 6, pp. 384, 437, 1880; vol. 7, p. 141, 1881.

[e] Phil. Trans., vol. 176, p. 403, 1885; Geol. Mag., 1887, p. 435; idem, 1888, p. 241.

[f] See Hinde and Sollas, loc. cit., and G. C. Wallich, Quart. Jour. Geol. Soc., vol. 36, p. 68, 1880. J. A. Merrill (Bull. Mus. Comp. Zool., vol. 28, p. 1, 1895) has described fossil sponges from flints found in the Cretaceous near Austin, Texas.

[g] Proc. Am. Assoc. Adv. Sci., 1879, p. 396.

[h] See *ante*, p. 161.

deposit from hot springs. As sandstone it is an aggregate of finely divided quartz. In gaize and some cherts the rock is composed in great part of organic remains. In some cases calcium carbonate has been obviously replaced by silica. There are also siliceous concretions, like flints, as well as the oolites which are formed by the deposition of silica from solution around quartz grains. Such an oolite from Pennsylvania has been studied by several investigators.[a] It is possible that a single formation may represent more than one of these processes. R. D. Irving and C. R. Van Hise,[b] for example, describing the chert of the Penokee iron region, which was laid down simultaneously with the iron carbonates, suggest that it may have been partly derived from organic remains and also be partly a chemical sediment. In short, no one process can account for all the occurrences of amorphous or cryptocrystalline silica, and each locality must be studied in the light of its own evidence.

The following analyses of chert, novaculite, etc., will serve to illustrate the chemical uniformity of these rocks:[c]

Analyses of chert and allied rocks.

A. Novaculite, Rockport, Arkansas. Analysis by R. N. Brackett. From Griswold's monograph, p. 161.

B. Chert, Belleville, Missouri. Analysis by E. A. Schneider, Bull. U. S. Geol. Survey No. 228, p. 297, 1904. Other analyses are given on the same page.

C. Chert from the Upper Carboniferous of Ireland.[d] Analysis by E. T. Hardman, Sci. Trans. Roy. Dublin Soc., new ser., vol. 1, p. 85, 1878.

D. Siliceous oolite, Center County, Pennsylvania. Analysis by Bergt, Abhandl. Gesell. Isis, 1892, p. 115.

E. Infusorial earth, Nevada. Analysis by R. W. Woodward, Rept. U. S. Geol. Explor. 40th Par., vol. 2, p. 768, 1877.

	A.	B.	C.	D.	E.
SiO_2	99.47	98.17	95.50	98.72	86.70
Al_2O_3	.17	.83	.10	.54	4.09
Fe_2O_3	.12		1.95		.....
FeO	.....	.....	.15	.....	1.26
CaO	.09	.05	.....	.09	.14
$CaCO_3$	.....	.....	.87	.....	.....
$CaSO_4$	.....	.....	trace	.....	.....
MgO	.05	.01	trace	.....	.51
K_2O	.07	.....	.....	.26	.41
Na_2O	.15	.....	trace		.77
P_2O_5	.....	.....	.....	.....	trace
Ignition	.12	.78	1.43	.34	5.99
	100.24	99.84	100.00	99.95	99.87

[a] E. H. Barbour and J. Torrey, Am. Jour. Sci., 3d ser., vol. 40, p. 246, 1890; E. O. Hovey, Bull. Geol. Soc. America, vol. 5, p. 627, 1893; and Bergt, Abhandl. Gesell. Isis, 1892, p. 115. See also G. R. Wieland, Am. Jour. Sci., 4th ser., vol. 4, p. 262, 1897, who ascribes these oolites to the agency of hot springs.

[b] Tenth Ann. Rept. U. S. Geol. Survey, pt. 1, p. 397, 1890. See also C. R. Van Hise, Treatise on metamorphism: Mon. U. S. Geol. Survey, vol. 47, pp. 847–853, 1904.

[c] For other analyses see Griswold's monograph on novaculite, Hardman's paper on the Irish cherts, Barbour and Torrey on the oolite, and Hovey, Am. Jour. Sci., 3d ser., vol. 48, p. 401, 1894, on cherts from Missouri. In a large number of cherts from Kentucky, J. H. Kastle, J. C. W. Frazer, and G. Sullivan (Am. Chem. Jour., vol. 20, p. 153, 1898) found appreciable amounts of phosphates ranging from 0.18 up to 3.5 per cent of P_2O_5.

[d] Some of the Irish cherts are highly calcareous, representing transitions to siliceous limestone.

Other analyses, in considerable number, show intermediate gradations between chert and limestone. These represent comminglings in any proportion between the cherty silica and calcium carbonate, That is, silica and calcium carbonate may be deposited together in the same mud or ooze, forming a nearly homogeneous mixture.

SHALE AND SLATE.

When the finest products of sedimentation consolidate, they tend to form a close-grained, laminated, or fissile rock, which is called shale. As thus used, the term is very vague and has little chemical significance. Sand, reduced to the fineness of flour, may form a rock which is shaly in structure, and so too may limestone. In these cases, however, there is commonly more or less argillaceous impurity in the rocks, so that it is better to call them argillaceous sandstones or limestones.

As the term is generally used, a shale is supposed to be a consolidated mud or clay in which the aluminous silicates are the more important and characteristic constituents. Shales, therefore, vary in composition exactly as do the materials from which they form, and may contain sandy or calcareous impurities. Bituminous and carbonaceous shales are also common. Many shales contain pyrite or marcasite, which oxidize and give rise to the formation of sulphates. These rocks are called alum shales and exhibit aluminous efflorescences. The alum shales and calcareous shales are easily alterable; those which consist chiefly of aluminous silicates, having been formed from the final products of rock decomposition, are remarkably stable. Their disintegration, when it occurs, is largely a mechanical process and involves very little chemical change.

Between typical sandstones and typical shales there are pronounced structural differences. A sandstone is made up of grains which are discernible to the eye, and is therefore distinctly porous. In consequence of this peculiarity it is easily permeable to percolating waters, the source from which its cementing substances are derived. A shale, on the other hand, consists of much finer particles, which are closely packed, and its porosity is small.[a] In its formation the cementing process is less prominent than in the case of sandstone, and its consolidation seems to have been effected by a sort of welding. The colloidal matter contained in most muds and clays is capable of binding under the influence of pressure alone; and to unions of this kind a shale mainly owes its coherence. Cementation is not excluded, but it has become a subordinate factor. Under the influence of pressure, the water of a mud is largely expelled, so that the resulting shale is much less hydrous.

[a] For data on the fineness of sand and mud particles, see C. R. Van Hise, Treatise on metamorphism: Mon. U. S. Geol. Survey, vol. 47, p. 892, 1904.

The following analyses of shales were all made in the laboratory of the United States Geological Survey. Some constituents, reported in "traces" only, are omitted from the table. A number of other analyses are given in Bulletin No. 228, pages 337–350.

Analyses of shales.

A. A composite analysis of fifty-one Paleozoic shales, by H. N. Stokes.
B. Composite analysis of twenty-seven Mesozoic and Cenozoic shales, by H. N. Stokes.
C. Black Devonian shale, near Longfellow mine, Morenci district, Arizona. Analyzed by W. F. Hillebrand.
D. Middle Cambrian shale, Coosa Valley, Alabama. Analysis by Stokes.
E. Bituminous shale, Dry Gap, Georgia. Analysis by L. G. Eakins.
F. Shale, near Rush Creek, Pueblo quadrangle, Colorado. Analysis by George Steiger.
G. Carboniferous shale, Elliott County, Kentucky. Analysis by T. M. Chatard.
H. Cretaceous shale, Mount Diablo, California. Highly calcareous. Analysis by W. H. Melville.

	A.	B.	C.	D.	E.	F.	G.	H.
SiO_2	60.15	55.43	61.25	55.02	51.03	45.89	41.32	25.05
TiO_2	.76	.46	.66	.65	.....	.52	.48	.....
Al_2O_3	16.45	13.84	15.60	21.02	13.47	13.24	20.71	8.28
Fe_2O_3	4.04	4.00	1.35	5.00	8.06	3.88	2.59	.27
FeO	2.90	1.74	3.04	1.54	.....	.....	5.46	2.41
MnO	trace	trace	.07	trace	.....	.....	.17	4.11
ZnO	.....	.....	.03	.....	.....	.....	.....	.....
CaO	1.41	5.96	3.40	1.60	.78	12.09	9.91	27.87
BaO	.04	.06	trace	.04	.....	.....	.....	.....
MgO	2.32	2.67	4.16	2.32	1.15	2.12	1.91	2.61
Na_2O	1.01	1.80	.44	.81	.41	.47	7.19	.....
K_2O	3.60	2.67	6.74	3.19	3.16	2.31	.88	.....
Li_2O	trace	trace	trace	.03	.....	.....	.....	.....
H_2O-	.89	2.11	.62	2.44	.81	1.38	.....	1.44
H_2O+	3.82	3.45	2.09	5.65		4.16	8.78	2.86
P_2O_5	.15	.20	.08	.06	.31	.17	.08	.08
CO_2	1.46	4.62	.....	.83	.....	10.38	.55	24.20
SO_3	.58	.78	.....	.02	.....	.....	.....	.....
S	.....	.....	.....	.....	7.29	.....	.....	.....
C	.88	.69	.....	[a].32	13.11	.....	.....	.....
Hydrocarbons	.....	.....	.....	.....	3.32	.....	.....	.....
Organic matter	.....	.....	.....	.....	.....	3.47	.....	.....
Pyrite	.....	.....	.25	.....	.....	.....	.....	.....
Chalcopyrite	.....	.....	.03	.....	.....	.....	.....	.....
	100.46	100.48	99.81	100.54	[b]102.90	100.08	100.03	99.18

[a] Carbonaceous matter. [b] Less O=S, 100.17.

The most noticeable feature in these analyses, as compared with analyses of similar clays, is the change in the iron oxides. In the shales the proportion of ferrous relatively to ferric oxide has increased; probably because of the reducing action of organic matter in the sediments as they were first laid down. Ferric oxide has been evidently reduced, and organic substances furnish the most obvious reagent for producing such an alteration.

Under the long-continued influence of pressure the shales become more compact and less hydrous, and pass into the rocks known as clay slates. By further change, of a metasomatic character, the slates are transformed into the metamorphic mica schists, in which various new minerals appear. The schists will be considered in the next chapter. Even in the slates the effects of metasomatism are manifest, for micas and chlorites appear conspicuously in them. These minerals have been formed at the expense of the clay silicates and the residual feldspars. Scales of detrital mica are, of course,

common in the sediments; but in the slates the feldspar grains have been more or less transformed into particles made up of interlocking quartz and mica; the latter usually appearing in the fibrous sericitic form. Even in Carboniferous clays and shales W. M. Hutchins[a] found little kaolin, but more or less secondary quartz, chlorite, and mica. The chlorites, evidently, were derived from the débris of ferromagnesian minerals.

The mineralogical composition of the clay slates has been studied by several investigators,[b] and the results are thoroughly summed up by Dale in his memoir upon the slate belt of eastern New York and western Vermont. In these rocks he observed clastic particles of quartz, feldspar, zircon, muscovite, and carbonaceous matter; and autogenous quartz, chlorite, muscovite, pyrite, and carbonates of lime, magnesia, iron, and manganese. Rutile, hematite, and tourmaline were also noted. The pyrite was often altered to limonite. Other observers, studying other slates, have found ottrelite, staurolite, garnet, biotite, hornblende, epidote, apatite, pyrrhotite, gypsum, and magnetite in them.

The subjoined analyses of roofing slates were all made by W. F. Hillebrand in the laboratory of the United States Geological Survey:[c]

Analyses of roofing slates.

A. Sea-green slate, Pawlet, Vermont. B. Purple slate Castleton, Vermont. C. Black slate, Benson, Vermont. D. Red slate, near Hampton Village, New York. E. Green slate, near Janesville, New York. F. Black slate, Slatington, Pennsylvania.

	A.	B.	C.	D.	E.	F.
SiO_2	67.76	60.96	59.70	67.61	56.49	56.38
Al_2O_3	14.12	16.15	16.98	13.20	11.59	15.27
Fe_2O_3	.81	5.16	.52	5.36	3.48	1.67
FeO	4.71	2.54	4.88	1.20	1.42	3.23
MgO	2.38	3.06	3.23	3.20	6.43	2.84
CaO	.63	.71	1.27	.11	5.11	4.23
Na_2O	1.39	1.50	1.35	.67	.52	1.30
K_2O	3.52	5.01	3.77	4.45	3.77	3.51
H_2O-	.23	.17	.30	.45	.37	.77
H_2O+	2.98	3.08	3.82	2.97	2.82	4.09
TiO_2	.71	.86	.79	.56	.48	.78
CO_2	.40	.68	1.40	none	7.42	3.67
P_2O_5	.07	.23	.16	.05	.09	.17
MnO	.10	.07	.16	.10	.30	.09
BaO	.04	.04	.08	.04	.06	.08
FeS_2	.22	none	1.18	.03	.03	1.72
NH_3	.....	.01	.....	.....	.....	.....
C	none	.....	.46	.....	.....	.59
	100.07	100.23	100.05	100.00	100.38	100.39

[a] Geol. Mag., 1894, pp. 36, 64; idem, 1896, pp. 309, 343.

[b] See especially W. M. Hutchins, loc. cit.; H. C. Sorby, Quart. Jour. Geol. Soc., vol. 36, Proc., pp. 66–80, 1880; F. A. Anger, Jahrb. K.-k. geol. Reichsanstalt, Min. Mitth., vol. 25, p. 162, 1875. T. N. Dale (Nineteenth Ann. Rept. U. S. Geol. Survey, pt. 3, pp. 153–307, 1899; also Bull. No. 275, 1906) has made a special study of the roofing slates. His bulletin contains a report by W. F. Hillebrand on the composition of the slates, and closes with a valuable bibliography.

[c] See Dale, loc. cit., who cites other analyses. Still others are given in Bull. U. S. Geol. Survey No. 228, pp. 337–346, 1904. J. Roth (Allgem. chem. Geol., vol. 2, p. 588) tabulates 15 analyses of European clays and shales, and H. Rosenbusch (Elemente der Gesteinslehre, 2d ed., p. 442) gives a table of 19. See also E. C. Eckel, Jour. Geol., vol. 12, p. 25, 1904, for the average composition of 36 American roofing slates.

LIMESTONE.

The carbonate rocks, which may be either sedimentary, detrital, or metamorphic, are represented principally by limestone and dolomite. Limestone consists of calcium carbonate more or less impure, and it occurs in many forms of very diverse origin. Some limestone, the variety known as calcareous tufa or travertine, is a chemical precipitate, but in its larger masses the rock is generally of organic origin. Chalk is probably derived from a marine ooze; other limestones are made up of shells and corals. In some the organic remains are conspicuous; in many cases they are quite obliterated. Sandy, argillaceous, glauconitic, ferruginous, phosphatic, and bituminous limestones owe their names to their manifest impurities. Even gaseous inclusions may give a limestone its name, as in the case of the fetid limestones or "stinkstone" of certain well-known localities. This peculiarity is well shown by a bed of calcite in Chatham Township, Canada, described by B. J. Harrington,[a] which contains 0.016 per cent of hydrogen sulphide. A cubic foot of the rock contains about 500 cubic inches of the inclosed gas, to which its offensive odor, when struck or bruised, is due.

The primary source of limestone is obviously to be found in the decomposition of the igneous rocks by carbonated waters. Calcium carbonate is thus produced; it passes into solution in ground water, springs, and streams, and is thence withdrawn by a variety of processes. Its deposition as a chemical sediment, especially from hot springs, and even from sea water, was considered in a previous chapter,[b] but the evidence may well be repeated here and developed a little more fully. Much of the dissolved carbonate is precipitated as a cement in other rocks, but that point needs no further examination now.

When waters charged with calcium carbonate are allowed to evaporate, they deposit their load in the form of sinter, or tufa. This process can be observed at many thermal and "petrifying" springs, and also in the formation of stalactites and stalagmites in limestone caverns. In this way large masses of compact carbonate may be formed, which are oftentimes of great beauty. The so-called "onyx marbles," of which the Mexican "onyx" is a familiar example, are formed in this way. Some rock of this class is stalagmitic, from caverns, and some of it is formed by springs.[c] Its variations in color and texture, to which its ornamental character is largely due, are commonly produced by impurities or inclusions, such as oxide of iron, or even mud and clay.

---

[a] Am. Jour. Sci., 4th ser., vol. 19, p. 345, 1905.

[b] See *ante*, p. 159. Analyses of tufa and travertine are given on p. 160.

[c] For a general account of the onyx marbles see G. P. Merrill, Rept. U. S. Nat. Mus., *1893, p. 541*. A good table of analyses is given in this memoir. The onyx marbles are *usually calcite*, rarely aragonite.

When fresh waters, charged with carbonates, enter the sea, a direct precipitation of calcium carbonate may occur. This form of deposition, however, is exceptional, and few authentic examples of it are recorded. It happens only when the supply of carbonate is in excess of that which can be consumed by living organisms and when the conditions of temperature and evaporation are such as to expel the solvent carbon dioxide. By this is meant the carbon dioxide required to hold the carbonate in solution as bicarbonate. These conditions are found, according to Lyell,[a] in the delta of the Rhone, and B. Willis[b] has noted a similar precipitation of limestone along the margin of the Everglades in Florida. In the latter case, the inflowing water is exposed in broad, shallow sheets to evaporation, agitation, and variations of temperature and pressure. The calcium carbonate is partly thrown down as mud and partly deposited on underlying limestone as a layer of rock.

At Pyramid and Winnemucca lakes, in Nevada, great masses of calcareous tufa are formed, and sometimes, according to I. C. Russell,[c] the deposit takes the shape of oolitic sand. In the latter instance the precipitated carbonate is deposited around nuclei, which may be grains of sand or other foreign bodies. Similar formations occur around Great Salt Lake, but only, as G. K. Gilbert[d] reports, where there is much agitation of the waves. The tufa is not formed in sheltered bays, but where there is surf the overcharge of carbon dioxide is easily driven out of the water, and calcium carbonate is precipitated. Oolitic sand is also found at Great Salt Lake, and in this case its deposition has been traced by A. Rothpletz[e] to the action of minute algæ. This mode of formation needs to be considered further.

In 1864 Ferdinand Cohn[f] studied the formation of travertine at the waterfalls of Tivoli. He found there that many aquatic plants, especially species of *Chara*, mosses, and algæ, became incrusted with calcium carbonate—a fact which he attributed to their activity in absorbing carbon dioxide and so setting the carbonate free; that is, plants consume carbon dioxide and exhale oxygen. When they do this in water containing calcium bicarbonate, they deprive that salt of its second molecule of carbonic acid, and the insoluble neutral carbonate is thrown down. The sinter or travertine is thus formed pri-

[a] Principles of Geology, 12th ed., vol. 1, p. 426.

[b] Jour. Geol., vol. 1, p. 512, 1893.

[c] Mon. U. S. Geol. Survey, vol. 11, pp. 61, 189, 1885.

[d] Idem, vol. 1, p. 167, 1890.

[e] Am. Geologist, vol. 10, p. 279, 1892. See also E. B. Wethered, Quart. Jour. Geol. Soc., vol. 51, p. 196, 1895, on oolite from other localities. Viriet d'Aoust (Compt. Rend., vol. 45, p. 865, 1857), studying the formation of oolite in some Mexican lakes, argues that insect eggs, which are deposited in great numbers on the surface of the water, may act as nuclei.

[f] Neues Jahrb., 1864, p. 580. An earlier paper by Cohn (1862), on the Carlsbad "sprudelstein," I have not been able to see. It is often quoted. W. H. Weed (Ninth Ann. Rept. U. S. Geol. Survey, p. 613, 1889) has shown that the travertine formed around the hot springs of the Yellowstone National Park is produced by the aid of algæ.

marily, but it is afterwards transformed into a compact mass by the deposition of calcite in its interstices; and in times of flood, when the waters are muddy, layers of sediment are laid down with it.

The same sort of plant activity has been repeatedly observed in connection with the marl deposits of certain fresh-water lakes. The term "marl," it must be noted, is very vague, and has been applied not only to earthy forms of calcium carbonate, but also to glauconitic sands containing no carbonate at all. Shell marl, as its name indicates, is largely made up of fragmentary shells; the marl here mentioned is of a different kind. As long ago as 1854 W. Kitchell[a] pointed out that *Chara* took an active part in the production of fresh-water marl. In 1900 C. A. Davis[b] discussed the subject much more fully, with reference to some lakes in Michigan, and came to essentially the same conclusions as Cohn. Davis, however, regards the oxygen liberated by the aquatic plants, *Chara*, etc., as assisting in some way the precipitation of the carbonate; but his equation showing the supposed reaction rests on no experimental basis. The activity of plants in marl formation was also considered by W. S. Blatchley and G. H. Ashley[c] in their report on the lakes of Indiana, but these writers attach fully as much importance to inflowing, lime-bearing springs. The attention which these deposits have received is due to their value for fertilizing purposes. It is possible, as Mr. Bailey Willis has suggested to me, that some marine limestones have been formed by plant agencies. In the shallow seas which are thought to have covered a large part of the North American continent, the calcium carbonate may well have been thrown down by algæ. To produce a permanent deposit, however, the water must have been too warm to carry much carbonic acid in solution, and too shallow for the precipitate, while sinking, to redissolve.

Another process by which calcium carbonate may be precipitated was pointed out by G. Steinmann.[d] He found that albumen, which is present in the organic parts of all aquatic animals, was a distinct precipitating agent. Apparently, by fermentation, the albuminoids generate ammonium carbonate, and to that compound the precipitation of calcium carbonate is due. This or any other alkaline carbonate, entering waters saturated with calcium carbonate, would bring about the separation of the last-named salt.

In studying the formation of shell limestone or coral rock, it is desirable to take account of the fact that calcium carbonate exists

[a] First Ann. Rept. Geol. Survey New Jersey, p. 50, 1855. See also G. H. Cook, Geology of New Jersey, 1868, p. 172.

[b] Jour. Geol., vol. 8, pp. 485, 498, 1900; vol. 9, p. 491, 1901.

[c] Twenty-fifth Ann. Rept. Dept. Geology, etc., Indiana, pp. 31–322, 1900. The memoir contains analyses of marls by W. A. Noyes. See also a criticism by C. E. Siebenthal, Jour. Geol., vol. 9, p. 354, 1901. W. C. Kerr, in Geology of North Carolina, vol. 1, p. 187, gives many analyses of marl from that State. An elaborate report on marl, by *D. J. Hale*, and others, forms part 3 of volume 8, Geol. Survey Michigan, 1900.

[d] *Ber. Naturforsch.* Gesell. Freiburg, vol. 4, p. 288, 1889.

in at least two distinct modifications—calcite and aragonite. Calcite crystallizes in the rhombohedral division of the hexagonal system, and has, when pure, a specific gravity between 2.71 and 2.72. Aragonite is orthorhombic, and its specific gravity is near 2.94. Calcite is by far the more abundant form, and it is also the more stable.[a] Aragonite alters easily to paramorphs of calcite, but the reverse change rarely, if ever, occurs. The reported paramorphs of aragonite after calcite are of doubtful authenticity.

In recent years two other varieties of calcium carbonate have been described as distinct from calcite and aragonite. The carbonate of some molluscan shells, which had been called aragonite, was made into a distinct species by Agnes Kelly,[b] who named it conchite. The pisolite formed at the hot springs of Hammam-Meskoutine, Algeria, was given specific rank by A. Lacroix,[c] under the name ktypeite. Both of these alleged species have since been identified with aragonite,[d] and need no further consideration here.

Calcite and aragonite may be distinguished from each other, when not distinctly crystallized, either by their differences in specific gravity or in their optical properties. There are also two chemical tests discovered by W. Meigen.[e] When aragonite is immersed in a dilute solution of cobalt nitrate, it is colored lilac, and the color persists on boiling. Calcite, under like treatment, remains white in the cold, but becomes blue on long boiling. Again, calcite, in a solution of ferrous sulphate, produces a yellow precipitate of ferric hydroxide; while aragonite gives a dark-greenish precipitate of ferrous hydroxide. These tests were applied by Meigen to a large number of shells and corals, both recent and fossil, and the mineralogical character of each species was determined. A list of the determinations is given in his memoir.

The importance of discriminating between calcite and aragonite was pointed out very clearly by H. C. Sorby,[f] in his address upon the origin of limestones. He too, much earlier than Meigen, gave data concerning the calcareous parts of different classes of animals, and showed that shells composed of aragonite rarely appeared as

---

[a] See the physicochemical researches of H. W. Foote (Zeitschr. physikal. Chemie, vol. 33, p. 740, 1900), in which this point is developed quantitatively. Important modern papers on the relations between calcite and aragonite are by H. Vater, Zeitschr. Kryst. Min., vol. 21, p. 433, 1893; vol. 22, p. 209, 1894; vol. 24, pp. 366, 378, 1895; vol. 27, p. 477, 1897; and vol. 30, pp. 295, 485, 1899. See also O. Mügge, Neues Jahrb., Beil. Bd. 14, p. 246, 1901.

[b] Mineralog. Mag., vol. 12, p. 363, 1900.

[c] Compt. Rend., vol. 126, p. 602, 1898. For another description of this deposit see L. Duparc, Arch. sci. phys. nat., 3d ser., vol. 20, p. 537, 1888.

[d] On conchite, see R. Brauns, Centralbl. Min. Geol. Pal., 1901, p. 134. H. Vater (Zeitschr. Kryst. Min., vol. 35, p. 149, 1902) examined both conchite and ktypeite. Vater also describes the Carlsbad "sprudelstein," which is aragonite.

[e] Ber. Oberrhein. geol. Verein, 1902, p. 31. See also Meigen, Centralbl. Min. Geol. Pal., 1901, p. 577; A. Hutchinson, Mineralog. Mag., vol. 13, Proc., p. xxviii, 1903; and G. Wyrouboff, Bull. Soc. min., vol. 24, p. 371, 1901.

[f] Quart. Jour. Geol. Soc., vol. 35, Proc., p. 56, 1879.

marily, but it is afterwards transformed into a compact mass by the deposition of calcite in its interstices; and in times of flood, when the waters are muddy, layers of sediment are laid down with it.

The same sort of plant activity has been repeatedly observed in connection with the marl deposits of certain fresh-water lakes. The term "marl," it must be noted, is very vague, and has been applied not only to earthy forms of calcium carbonate, but also to glauconitic sands containing no carbonate at all. Shell marl, as its name indicates, is largely made up of fragmentary shells; the marl here mentioned is of a different kind. As long ago as 1854 W. Kitchell [a] pointed out that *Chara* took an active part in the production of fresh-water marl. In 1900 C. A. Davis [b] discussed the subject much more fully, with reference to some lakes in Michigan, and came to essentially the same conclusions as Cohn. Davis, however, regards the oxygen liberated by the aquatic plants, *Chara*, etc., as assisting in some way the precipitation of the carbonate; but his equation showing the supposed reaction rests on no experimental basis. The activity of plants in marl formation was also considered by W. S. Blatchley and G. H. Ashley [c] in their report on the lakes of Indiana, but these writers attach fully as much importance to inflowing, lime-bearing springs. The attention which these deposits have received is due to their value for fertilizing purposes. It is possible, as Mr. Bailey Willis has suggested to me, that some marine limestones have been formed by plant agencies. In the shallow seas which are thought to have covered a large part of the North American continent, the calcium carbonate may well have been thrown down by algæ. To produce a permanent deposit, however, the water must have been too warm to carry much carbonic acid in solution, and too shallow for the precipitate, while sinking, to redissolve.

Another process by which calcium carbonate may be precipitated was pointed out by G. Steinmann.[d] He found that albumen, which is present in the organic parts of all aquatic animals, was a distinct precipitating agent. Apparently, by fermentation, the albuminoids generate ammonium carbonate, and to that compound the precipitation of calcium carbonate is due. This or any other alkaline carbonate, entering waters saturated with calcium carbonate, would bring about the separation of the last-named salt.

In studying the formation of shell limestone or coral rock, it is desirable to take account of the fact that calcium carbonate exists

---

[a] First Ann. Rept. Geol. Survey New Jersey, p. 50, 1855. See also G. H. Cook, Geology of New Jersey, 1868, p. 172.

[b] Jour. Geol., vol. 8, pp. 485, 498, 1900; vol. 9, p. 491, 1901.

[c] Twenty-fifth Ann. Rept. Dept. Geology, etc., Indiana, pp. 31–322, 1900. The memoir contains analyses of marls by W. A. Noyes. See also a criticism by C. E. Siebenthal, Jour. Geol., vol. 9, p. 354, 1901. W. C. Kerr, in Geology of North Carolina, vol. 1, p. 187, gives many analyses of marl from that State. An elaborate report on marl, by D. J. Hale, and others, forms part 3 of volume 8, Geol. Survey Michigan, 1900.

[d] *Ber. Naturforsch. Gesell. Freiburg*, vol. 4, p. 288, 1889.

in at least two distinct modifications—calcite and aragonite. Calcite crystallizes in the rhombohedral division of the hexagonal system, and has, when pure, a specific gravity between 2.71 and 2.72. Aragonite is orthorhombic, and its specific gravity is near 2.94. Calcite is by far the more abundant form, and it is also the more stable.[a] Aragonite alters easily to paramorphs of calcite, but the reverse change rarely, if ever, occurs. The reported paramorphs of aragonite after calcite are of doubtful authenticity.

In recent years two other varieties of calcium carbonate have been described as distinct from calcite and aragonite. The carbonate of some molluscan shells, which had been called aragonite, was made into a distinct species by Agnes Kelly,[b] who named it conchite. The pisolite formed at the hot springs of Hammam-Meskoutine, Algeria, was given specific rank by A. Lacroix,[c] under the name ktypeite. Both of these alleged species have since been identified with aragonite,[d] and need no further consideration here.

Calcite and aragonite may be distinguished from each other, when not distinctly crystallized, either by their differences in specific gravity or in their optical properties. There are also two chemical tests discovered by W. Meigen.[e] When aragonite is immersed in a dilute solution of cobalt nitrate, it is colored lilac, and the color persists on boiling. Calcite, under like treatment, remains white in the cold, but becomes blue on long boiling. Again, calcite, in a solution of ferrous sulphate, produces a yellow precipitate of ferric hydroxide; while aragonite gives a dark-greenish precipitate of ferrous hydroxide. These tests were applied by Meigen to a large number of shells and corals, both recent and fossil, and the mineralogical character of each species was determined. A list of the determinations is given in his memoir.

The importance of discriminating between calcite and aragonite was pointed out very clearly by H. C. Sorby,[f] in his address upon the origin of limestones. He too, much earlier than Meigen, gave data concerning the calcareous parts of different classes of animals, and showed that shells composed of aragonite rarely appeared as

---

[a] See the physicochemical researches of H. W. Foote (Zeitschr. physikal. Chemie, vol. 33, p. 740, 1900), in which this point is developed quantitatively. Important modern papers on the relations between calcite and aragonite are by H. Vater, Zeitschr. Kryst. Min., vol. 21, p. 433, 1893; vol. 22, p. 209, 1894; vol. 24, pp. 366, 378, 1895; vol. 27, p. 477, 1897; and vol. 30, pp. 295, 485, 1899. See also O. Mügge, Neues Jahrb., Beil. Bd. 14, p. 246, 1901.

[b] Mineralog. Mag., vol. 12, p. 363, 1900.

[c] Compt. Rend., vol. 126, p. 602, 1898. For another description of this deposit see L. Duparc, Arch. sci. phys. nat., 3d ser., vol. 20, p. 537, 1888.

[d] On conchite, see R. Brauns, Centralbl. Min. Geol. Pal., 1901, p. 134. H. Vater (Zeitschr. Kryst. Min., vol. 35, p. 149, 1902) examined both conchite and ktypeite. Vater also describes the Carlsbad "sprudelstein," which is aragonite.

[e] Ber. Oberrhein. geol. Verein, 1902, p. 31. See also Meigen, Centralbl. Min. Geol. Pal., 1901, p. 577; A. Hutchinson, Mineralog. Mag., vol. 13, Proc., p. xxviii, 1903; and G. Wyrouboff, Bull. Soc. min., vol. 24, p. 371, 1901.

[f] Quart. Jour. Geol. Soc., vol. 35, Proc., p. 56, 1879.

fossils. The same subject was also discussed by V. Cornish and P. F. Kendall [a] on the basis of experiments in which they found that carbonated waters decompose and disintegrate aragonite shells much more readily than shells formed of calcite. The difference, however, is attributed to structure rather than to mineralogical distinctions. But be that as it may, while calcite organisms remain permanently in fossil form, aragonite shells largely disappear. Only the larger, denser, heavier aragonite structures seem to be preserved to any considerable extent. Kendall [b] has applied these observations to the study of oceanic oozes. The pteropod shells, being mainly aragonite, disappear below 1,500 fathoms depth, while the calcitic globigerina is found in ooze at 2,925 fathoms. From the fact that the Upper Chalk of England contains only calcite organisms, Kendall [c] infers that it was deposited at a depth of at least 1,500 fathoms. Attempts have been made to identify chalk with the globigerina ooze, but L. Cayeux [d] has shown that the two substances are markedly different. Chalk, however, is composed of organic remains, largely foraminiferal, and undoubtedly represents an ooze of some kind.[e] It also contains detrital impurities, and in chalk from northern France Cayeux [f] has identified microscopic particles of quartz, zircon, tourmaline, rutile, magnetite, muscovite, orthoclase, plagioclase, anatase, brookite, chlorite, staurolite, garnet, apatite, ilmenite, and corundum. These impurities exist in very small proportions, and for practical purposes chalk may be regarded as nearly pure carbonate of lime in exceedingly fine subdivision.

In his study of the oolites G. Linck [g] has shown that all recent deposits, so far as he was able to examine them, were composed of aragonite, while the older "fossil" occurrences were calcite—that is, according to his observations, oolite forms as aragonite and slowly changes to the more stable calcite. By experimenting directly with sea water it was found that precipitation with sodium or ammonium carbonate produced aragonite, as determined by Meigen's reaction with cobalt nitrate. When solutions of calcium bicarbonate alone were allowed to evaporate, Linck further found that at ordinary atmospheric temperature calcite was deposited, but that at 60° aragonite was formed. In sea water, then, the separation of calcium carbonate in one modification or the other is conditional upon the process of precipitation, and probably also upon climate. Where organic decay is prominent, the ammonium carbonate produced thereby may act as precipitant, and that is more likely to be the case in warm

[a] Geol. Mag., 1888, p. 66.
[b] Rept. Brit. Assoc. Adv. Sci., 1896, p. 789.
[c] Idem, 1896, p. 791.
[d] Mém. Soc. géol. du Nord, vol. 4, pt. 2, p. 518, 1897.
[e] See C. Wyville Thomson, Depths of the Sea, pp. 467, 501, London, 1874.
[f] *Op. cit.*, p. 257.
[g] *Neues Jahrb.*, Beil. Bd. 16, p. 495. Linck gives a good summary of previous literature upon oolite.

climates than in cold. The direct deposition of calcium carbonate is commonly in the calcite form, because the temperature of oceanic water is usually low. The two minerals in certain cases may be formed together, and this actually happens in the growth of some shells. A shell may consist of a principal mass of calcite, coated by a pearly layer of aragonite, and other associations of the two species in a single animal are well known. In the fossilization of such a shell the aragonite portion is commonly destroyed, while the calcitic layer or fragment is preserved.

In what manner do plants and animals withdraw or segregate calcium carbonate from sea water? To this question there have been many answers proposed,[a] but the problem is essentially physiological, and its full discussion would be inappropriate here. Some of the answers, however, were framed before the modern theory of solutions had been developed, and are therefore no longer relevant. It is not necessary to ask whether the living organisms derive their calcareous portions from the sulphate or chloride of calcium or absorb the carbonate directly, for these salts are largely ionized in sea water. It is only essential that calcium ions and carbonic ions shall be simultaneously present; then the materials for coral and shell building are at hand. The carbonic ions may be of atmospheric origin, or brought to the sea by streams, or developed by the physiological processes of marine animals, or a product of organic decay; all of these sources contribute to the one end and help to supply the material from which limestones are made. Where marine life is abundant, there also the carbonic ions abound. This fact is strikingly shown by W. L. Carpenter's analyses[b] of the gases extracted from sea water and their correlation with the results obtained by dredging. In one series of three samples from different depths, but at the same locality, the gases were composed as follows:

Gases extracted from sea water collected at different depths.

	862 fathoms (bottom).	800 fathoms.	750 fathoms.
O_2	17.22	17.79	18.76
N_2	34.50	48.46	49.32
CO_2	48.28	33.75	31.92
	100.00	100.00	100.00

On the bottom, where the proportion of CO_2 was highest, animal life was abundant, and the dredge brought up a rich haul. At another point, where the CO_2 at the sea bottom fell to 7.93 per cent, the dredge made a very bad haul. In short, from the composition

[a] See R. Brauns, Chemische Mineralogie, pp. 377–378, for a summary of this subject.

[b] In C. Wyville Thomson's Depths of the Sea, pp. 502–511, London, 1874. On p. 513 is given a table of analyses of sea water by Frankland, in which the presence of abundant organic matter is shown.

of the dissolved gases, it was possible to assert whether living forms were scarce or plentiful upon a particular point of the ocean floor.

The most obvious occurrence of limestone building from shells is that which may be observed on many sea beaches. The coquina of Florida is a familiar example of this kind. Masses of shell fragments are there compacted together, cemented by calcium carbonate which has been deposited from solution between the bits of shell, and a fairly substantial rock, available for building purposes, is produced. Some quartz sand is commingled with the shell material, and at one locality, noted by W. H. Dall,[a] limonite, deposited by a chalybeate spring, serves as cementing substance.

In the Bay of Naples, according to J. Walther,[b] calcareous algæ, especially of the genus *Lithothamnion*, are conspicuous makers of limestone; and similar observations have been made elsewhere by others. *Lithothamnion* is a seaweed whose framework or skeleton consists of calcite; another genus, *Halimeda*, which is also active in limestone making, contains aragonite.

From a genetic point of view the coralline limestones have probably been the limestones most carefully studied. Their formation around coral islands and in coral reefs can be observed with the greatest ease, and the process may be followed step by step. First, the living coral; then its dead fragments, broken into sand by the waves; then their cementation by solution and redeposition of calcium carbonate; and finally the solid rock, made up visibly of organic remains, may be seen. In such limestones, according to E. W. Skeats,[c] both calcite and aragonite occur, directly deposited from the sea water. In composition, when recent, they are like the coral itself, nearly pure carbonate of lime, but a little organic matter is also present, some earthy matter, and very small quantities of calcium phosphate. In corals from the Gulf Stream S. P. Sharples[d] found from 95.37 to 98.07 per cent of $CaCO_3$, and 0.28 to 0.84 of $Ca_3P_2O_8$. These results are concordant with those obtained by many other analysts.[e] and need no further illustration just now. The alteration of coral rock to dolomite will be considered later.

From what has been said in the preceding pages, it is evident that important limestones may be formed in various ways, which, however, are chemically the same. Calcium carbonate, withdrawn from fresh or salt water, is laid down under diverse conditions, yielding masses which resemble one another only in composition.

---

[a] Am. Jour. Sci., 3d ser., vol. 34, p. 163, 1887.

[b] Zeitschr. Deutsch. geol. Gesell., vol. 37, p. 329, 1885.

[c] Bull. Mus. Comp. Zool., vol. 42, pp. 53–126, 1903.

[d] Am. Jour. Sci., 3d ser., vol. 1, p. 168, 1871.

[e] See, for example, A. Liversidge, Proc. Roy. Soc. New South Wales, vol. 14, p. 159, 1880; on coral from New Hebrides, and coral rock from Duke of York Island. Also A. J. Jukes-Brown and J. B. Harrison, Quart. Jour. Geol. Soc., vol. 47, p. 224, 1891, on coral rocks from Barbadoes. A number of analyses of coquina, coralline limestones, etc., are given in Bull. U. S. Geol. Survey No. 228, 1904.

An oceanic ooze may produce a soft, flourlike substance such as chalk, or a mixture of carbonate and sand, or one of carbonate and mud or clay. Calcium carbonate, transported as a silt, may solidify to a very smooth, fine-grained rock, while shells and corals yield a coarse structure, full of angular fragments and visible organic remains. Buried under other sediments, any of these rocks may be still further modified, the fossils becoming more or less obliterated, until in the extreme case of metamorphism a crystalline limestone is formed. All trace of organic origin has then vanished, a change which both heat and pressure have combined to bring about, aided perhaps by the traces of moisture from which few rocks are free. Several experimental investigations bear directly upon this class of transformations.

To illustrate the influence of pressure alone, we have an important experiment by W. Spring.[a] A quantity of dry, white chalk, inclosed in a steel tube, was placed in a screw press under a pressure of 6,000 to 7,000 atmospheres, and left there for a little over seventeen years. At the end of that time it had become hard and smooth, with a glazed surface, and was somewhat discolored by iron from the tube. It was also in part distinctly crystalline; in short, it resembled to some extent a crystalline limestone, although the change was not absolutely complete.

When heated above redness at ordinary pressures, limestone decomposes into carbon dioxide and lime. This is the common change produced in a limekiln. Under pressure, however, this dissociation is prevented, and calcium carbonate may be apparently fused. Over a century ago Sir James Hall[b] heated limestone in closed vessels and obtained from it a product identical in general character with crystalline marble. Since Hall's time the experiment has been repeated by a number of other investigators, under varying conditions, with various degrees of success, and with quite dissimilar interpretations. It was supposed at first that Hall had fused limestone, and this belief was prevalent for many years. G. Rose,[c] however, transformed a compact limestone into marble as Hall had done, but without evidence of fusion; and A. Becker,[d] in a more extended research, found that by moderate heat and relatively slight pressure calcium carbonate could be converted into a finely granular mass. A fine powder of the carbonate even developed into larger grains of calcite without either fusing or softening.

---

[a] Zeitschr. anorg. Chemie, vol. 11, p. 160, 1896.

[b] Trans. Roy. Soc. Edinburgh, vol. 6, 1812, p. 71. The experiments were performed in 1805. For a summary of the results obtained by Bucholz, Petzholdt, and Richthofen, see J. Lemberg, Zeitschr. Deutsch. geol. Gesell., vol. 24, pp. 237–241, 1872. Lemberg criticizes the conclusions drawn from Hall's data, and expresses a strong doubt as to whether fusion actually occurred.

[c] Pogg. Annalen, vol. 118, p. 565, 1863.

[d] Min. pet. Mitth., vol. 7, p. 122, 1886. Becker also gives a good summary of the earlier literature of the subject.

In the experiments of H. Le Chatelier[a] an actual fusion of the carbonate was perhaps effected. The chemically precipitated carbonate was inclosed in a steel cylinder between two pistons, under a pressure of about 1,000 kilograms to the square centimeter. Heat was applied by an electric current passing through a spiral of platinum wire embedded in the mass, and the temperature attained was about 1,050°. Under these conditions the calcium carbonate near the spiral was fused to a translucent mass resembling some marbles. Between the fused and unfused portions there was a sharp demarcation, with no indication of any intermediate state. In his second paper Le Chatelier states that even at 1,020° and under slight or insignificant pressure calcium carbonate agglomerates to a crystalline mass. In similar experiments A. Joannis[b] was able to transform chalk into something like marble at a temperature above the melting point of gold and under a pressure of 15 atmospheres. Joannis suggests that the melting point of calcium carbonate may perhaps be lowered by pressure. H. E. Boeke,[c] however, found that although the carbonate sinters together at temperatures between 1,400° and 1,500°, under a pressure of 30 atmospheres of carbon dioxide, it undergoes partial dissociation, but does not appear to fuse.

From all of this evidence we may conclude that the change from apparently amorphous calcium carbonate to a distinctly crystalline limestone or marble may be effected by pressure alone, heat alone, or both together. Actual fusion may or may not occur; at all events it seems to be unnecessary. Furthermore, it is highly probable that water plays some part in bringing about the transformation, for in geological phenomena its influence is rarely excluded. If water did no more than to dissolve and redeposit particles of carbonate, it would go far toward producing the observed change in structure. Under those conditions the carbonate would, in time, become a coarsely crystalline or granular mass of calcite.

The following analyses of limestones are all taken from the laboratory records of the United States Geological Survey:[d]

---

[a] Compt. Rend., vol. 115, pp. 817, 1009, 1892. Two papers.

[b] Idem, vol. 115, pp. 934, 1236, 1892. Two papers.

[c] Zeitschr. anorg. Chemie, vol. 50, p. 244, 1906. Boeke found that aragonite is transformed into calcite at about 470°.

[d] See Bull. No. 228, pp. 301–336, 1904, where 234 analyses of carbonate rocks are given. For other data see T. C. Hopkins, Ann. Rept. Geol. Survey Arkansas, 1890, vol. 4. S. W. McCallie, Bull. No. 1, Geol. Survey Georgia, 1894. F. G. Clapp, Bull. U. S. Geol. Survey No. 249, 1905, gives many analyses compiled from the geological reports of Pennsylvania. H. Ries and E. C. Eckel, Bull. No. 44, New York State Mus., 1901. Ries, Fifty-first Ann. Rept. New York State Mus., pt. 2, pp. 357–467, 1899. E. C. Eckel, Bull. U. S. Geol. Survey No. 243, 1905, on cement materials. W. G. Miller, Rept. Bur. Mines (Ontario), 1904, pt. 2. T. C. Hopkins and C. E. Siebenthal, Twenty-first Ann. Rept. Dept. Geology, etc., Indiana, pp. 293–427, 1896.

Analyses of limestones.

A. Limestone, Lee, Massachusetts. Analysis by G. Steiger.
B. Limestone, Silverdale, Kansas. Analysis by C. Catlett.
C. Lithographic stone, Solenhofen, Bavaria. Analysis by Steiger.
D. Oolitic sand, Great Salt Lake, Utah. Analysis by T. M. Chatard.
E. Coquina, Key West, Florida. Analysis by F. W. Clarke.
F. Recent coral (*Siderostria*), Bermuda. Analysis by L. G. Eakins.
G. Composite analysis, by H. N. Stokes, of 345 limestones.
H. Composite analysis by Stokes of 498 limestones used for building purposes. Does the high proportion of silica determine the availability of these rocks to structural ends?

Ideally pure calcium carbonate contains 56.04 per cent of CaO and 43.96 of CO_2.

	A.	B.	C.	D.	E.	F.	G.	H.
SiO_2	0.95	5.27	1.15	[a] 4.03	0.25	0.23	5.19	14.09
TiO_2	.....	.....	.....	.....	.....	.....	.06	.08
Al_2O_3	.09	1.07	.45	.20	.56	trace	.81	1.75
Fe_2O_3	none	.71	.....	.....	.....	.....	.54	.77
FeO	.10	.32	.26	.....	.....	.....	.....	.....
MnO	.....	.....	.....	.....	.....	.....	.05	.03
CaO	54.75	50.36	53.80	51.33	51.52	55.16	42.61	40.60
MgO	.56	.56	.56	.72	2.08	.20	7.90	4.49
K_2O	.15	.10	.07	.63	.....	.....	.33	.58
Na_2O	.02	.20	.....	.....	.....	.....	.05	.62
Li_2O	.....	.....	.....	.....	.....	.....	trace	trace
H_2O-	.08	.78	.23	.83	3.19	.54	.21	.30
H_2O+	.....	.....	.69	.....	.....	.....	[b] .56	[b] .88
P_2O_5	.03	.06	.....	trace	.....	.....	.04	.42
CO_2	43.38	40.34	42.69	41.07	41.58	43.74	41.58	35.58
S	.....	.....	.....	.....	.....	.....	.09	.07
SO_3	.05	.07	none	.89	.....	.....	.05	.07
Cl	.....	.....	.....	.....	.....	.....	.02	.01
Organic	.....	.....	.....	.27	.....	.....	.....	.....
	100.16	99.84	99.90	99.97	99.18	99.87	100.09	100.34

[a] Insoluble in hydrochloric acid. [b] Includes organic matter.

Limestones undergo alteration in several ways. They may be silicified by percolating waters, or phosphatized, as is often seen on guano islands. By oxidation of inclosed pyrite, acid sulphates can be formed, and these will alter the limestone partially to gypsum. Acid waters dissolve limestone with evolution of carbon dioxide; and some effervescent springs may owe their sparkling qualities to reactions of this kind. A honeycombed limestone at the bottom of Lake Huron was possibly corroded by water of an acid type. R. Bell[a] found the water of the lake over the limestones to be distinctly acid, the acidity having been possibly derived from sulphides in Huronian rocks to the northward. By thermal metamorphism a limestone may be profoundly altered; but that class of changes is to be considered in another chapter. By far the most important alteration, however, is that produced by waters containing carbon dioxide, especially meteoric waters. These dissolve limestone, and the caverns formed in limestone regions are produced in this way. Great masses of limestone are thus removed, to be deposited, generally in a diffused form, elsewhere. At the same time, the insoluble residual impurities are left behind, in the form of sand, clay, ores of manganese and iron,

[a] Bull. Geol. Soc. America, vol. 6, p. 302, 1894.

etc.[a] Some analyses of such residual clays are given in the preceding chapters. These residues are very variable in composition, and rarely approximate to kaolin. This point was developed by H. Le Chatelier,[b] who dissolved several calcareous marls in acetic acid, and analyzed the residual silicates. Kaolinite was not found in them; but hydrous silicates of aluminum, ill defined and impure, were generally obtained. In one sample from the French Congo, the residue was a silicate of magnesium. According to A. L. Ewing,[c] the rate of limestone erosion in Spring Creek Valley, Center County, Pennsylvania, amounts to 275 tons per square mile per annum.[d] This corresponds to a lowering of the land surface in that region of about 1 foot in nine thousand years.

DOLOMITE.

In the foregoing pages upon limestone, the magnesian varieties have been purposely left out of account. They represent transitions from calcium carbonate to dolomite, $CaMg(CO_3)_2$, a rock of great importance both practically and theoretically, and one which demands separate consideration. In addition to dolomite, it is necessary also to consider magnesium carbonate itself, magnesite, and its hydrous derivatives, of which several are known. Like calcium carbonate, these species originate in very different ways, and some of the processes by which they form must be discussed in connection with the subject of serpentine later. Only the compounds of sedimentary or organic origin fall within the scope of this chapter.

The double carbonate, dolomite, can be produced artificially by several methods, and its accidental formation has also been observed. C. de Marignac[e] obtained it by heating calcium carbonate with a solution of magnesium chloride to 200°, under a pressure of 15 atmospheres. J. Durocher[f] heated fragments of porous limestone with dry magnesium chloride to dull redness in a closed gun barrel, in such manner that the carbonate was impregnated by the vapor of the chloride. Under those conditions the limestone was partly changed to dolomite. The local formation of dolomite by volcanic action is explained by this experiment, but that mode of occurrence is of minor import. C. Sainte-Claire Deville[g] saturated chalk with a solution of magnesium chloride and heated the mass upon a sand bath. A partial replacement of lime by magnesia was thus effected.

[a] See I. C. Russell, Bull. U. S. Geol. Survey No. 52, 1889, for a discussion of this subject. Russell regards the Clinton iron ores of Alabama as residues of this kind, but his views on that matter have been contested.

[b] Compt. Rend., vol. 118, p. 262, 1894.

[c] Am. Jour. Sci., 3d ser., vol. 29, p. 29, 1885.

[d] Or 29.173 grams per square meter.

[e] Cited in a memoir by A. Favre, Compt. Rend., vol. 28, p. 364, 1849.

[f] *Idem*, vol. 33, p. 64, 1851.

[g] *Idem*, vol. 47, p. 91, 1858.

and similar results were obtained with corals. A. von Morlot,[a] by heating powdered calcite with magnesium sulphate to 200° in a sealed tube, transformed the carbonate into a mixture of dolomite and gypsum. This reaction had been suggested by Haidinger, in order to account for the frequent association of the two last-named species. The process, however, is reversible, and solutions of gypsum will transform dolomite into calcium carbonate and magnesium sulphate. Efflorescences of the latter salt are not uncommon in gypsum quarries, and H. C. Sorby[b] has observed them in Permian limestones. Because of this reaction, according to Sorby, the upper beds of magnesian limestone are often more calcareous than the lower. Their content in magnesia has been diminished in this way.

The elaborate experiments of T. Sterry Hunt[c] upon the precipitation of calcium and magnesium carbonates, especially by alkaline carbonates from bicarbonate solutions, are too complex to admit of anything like a full summary here. In most of the experiments mixtures of calcium carbonate with the hydrated magnesium compound were obtained. When, however, the pasty mass formed by precipitating the two carbonates together was heated to temperatures above 120°, union took place and dolomite was formed. From the fact that a sedimentary dolomite could thus be produced, Hunt concluded that dolomite is generally a chemical precipitate, a view which is not widely held to-day.

In several instances the deposition of magnesian travertine and even of crystallized dolomite from natural waters has been observed. According to J. Girardin,[d] the travertine formed by the mineral spring of St. Allyre, near Clermont, in France, is rich in magnesium carbonate. In recent travertine he found 28.80 per cent of $MgCO_3$ with 24.40 of $CaCO_3$, and in old travertine the proportions were 26.86 and 40.22, respectively. Whether this represents dolomite or a mixture of the carbonates was not determined. A. Moitessier[e] found that in a badly closed bottle of water from another French spring distinct crystals of dolomite had been deposited. In another water from a hot spring near the Dead Sea, which was transported to Paris in a sealed tube, similar crystals were found by A. Terreil.[f] From this observation Lartet concludes that the dolomites of the Dead Sea region were probably formed through the impregnation of limestones by magnesian waters.

On the other hand, E. von Gorup-Besanez[g] found that springs

[a] Jahresb. Chemie, 1847–48, p. 1290. Also Compt. Rend., vol. 26, p. 311, 1848.
[b] Rept. Brit. Assoc. Adv. Sci., 1856, p. 77.
[c] Am. Jour. Sci., 2d ser., vol. 28, pp. 170, 365, 1859; vol. 42, p. 49, 1866.
[d] Ann. mines, 3d ser., vol. 11, p. 460, 1837.
[e] Jahresb. Chemie, 1866, p. 178.
[f] Cited by L. Lartet, Bull. Soc. géol., 2d ser., vol. 23, p. 750, 1866.
[g] Liebig's Annalen, 8th Supp. Bd., p. 230, 1872.

from the dolomites of the Jura, which contain calcium and magnesium carbonates in the dolomite ratio, deposit the mixed salts upon evaporation and not the double compound. Gorup-Besanez observed, however, that carbonated waters, acting upon dolomite, dissolve the mineral with its ratios undisturbed. The occurrence of dolomite geodes in magnesian limestones would seem to show that in such cases at least the double salt can be re-formed. Similar results were earlier obtained by T. Scheerer,[a] when artificial solutions of calcium and magnesium bicarbonate were allowed to evaporate spontaneously at ordinary temperatures. Only mixtures were formed, no dolomite. He also found that powdered chalk precipitated magnesium carbonate from a bicarbonate solution, although carbonated waters dissolved calcium carbonate out of magnesian limestones. The last observation, however, had been made by other chemists previously.

In Hunt's investigations it became evident that temperature is an important factor in the formation of dolomite. The same conclusion is to be drawn from F. Hoppe-Seyler's experiments.[b] At ordinary temperatures a solution of magnesium chloride acting upon calcium carbonate for several months yielded no dolomite. Sea water mixed with an excess of calcium carbonate and saturated with carbon dioxide, after standing four months in a closed flask, also failed to form dolomite. But when magnesium salts or sea water were heated with calcium carbonate in sealed tubes, then both dolomite and magnesite were formed. Carbonate of lime, heated to over 100° with a solution of magnesium bicarbonate, gave this result.

In the earlier researches upon the conversion of limestone into dolomite little or no attention seems to have been paid to the mineralogical character of the initial substance. In C. Klement's experiments[c] aragonite, the less stable form of calcium carbonate and the form which is abundant in coral reefs, was especially studied. It was found that a concentrated solution of magnesium sulphate, at 60°, would partially transform aragonite into magnesium carbonate, and coral was altered in the same way. Calcite, by similar treatment, was but slightly attacked. Magnesium sulphate and sodium chloride, used together, altered aragonite strongly, forming a product containing as high as 41.5 per cent of $MgCO_3$. Normal dolomite, ideally pure, would contain 45.7 per cent. Magnesium chloride proved to be less active than the sulphate. The products of these reactions consisted, however, not of dolomite, but of the mixed carbonates, and Klement suggests that mixtures of this kind would prob-

[a] Neues Jahrb., 1866, p. 1.

[b] Zeitschr. Deutsch. geol. Gesell., vol. 27, p. 509, 1875. In this connection it may be noted that H. C. Sorby (Quart. Jour. Geol. Soc., vol. 35, Proc., p. 56, 1879) found that Iceland spar, in a solution of magnesium chloride, became slowly incrusted with magnesium carbonate.

[c] *Bull.* Soc. belge géol., vol. 9, Mém. 3, 1895. Min. pet. Mitth., vol. 14, p. 526, 1894.

ably, in time, recrystallize into the double salt. He attributes the formation of dolomite to the action of sea water in closed lagoons upon aragonite—that is, upon coral rock. The latter, as will be shown presently, is often the parent of dolomite. It must be observed, however, that aragonite is not the only parent of dolomite, for pseudomorphs of dolomite after calcite are well known.[a]

Two other investigations upon the synthesis of dolomite remain to be mentioned. L. Bourgeois and H. Traube [b] obtained it by heating a solution of magnesium chloride, calcium chloride, and potassium cyanate, KCNO, to 130° in a sealed tube. This mode of production has no geological significance, except in so far as it shows that the necessary carbonic acid may be supplied from organic or semiorganic sources. Such sources are considered by F. W. Pfaff,[c] who has shown that the products of organic decomposition, as derived from the coral-building organisms, probably take part in the dolomitic process. Not alone carbonic acid is generated during organic decay, but ammonium carbonate, ammonium sulphide, and hydrogen sulphide are also produced, and these compounds, according to Pfaff, appear to assist in the formation of dolomite. In a later paper, however, Pfaff [d] states that when a current of carbon dioxide is passed for a long time through a warm solution of the sulphates and chlorides of magnesium and calcium, the solution, upon slow evaporation at a temperature of 20° to 25°, yields a residue which contains a double carbonate insoluble in weak hydrochloric acid. That is, under these conditions, which might be approximately paralleled in the concentration of sea water, dolomite may be formed.

Under certain exceptional conditions magnesium carbonate may be deposited alone. A solution of the bicarbonate, on evaporating spontaneously, forms the hydrous salt $MgCO_3.3H_2O$, which corresponds to the rare mineral nesquehonite. This species, described by F. A. Genth and S. L. Penfield,[e] from the Nesquehoning anthracite mine in Pennsylvania, was there produced by the alteration of a basic carbonate, lansfordite,[f] $3MgCO_3.Mg(OH)_2.21H_2O$, which first formed as stalactites in one of the galleries. Nesquehonite has since been identified by C. Friedel [g] as a similar formation in a French coal mine. Such stalactiform minerals are obviously deposited from solution in carbonated waters.

The term "dolomite" is sometimes loosely used by geologists as equivalent to magnesian limestone. Any limestone containing

[a] See Blum's Pseudomorphosen, p. 51, and Nachtrag, p. 23.
[b] Bull. Soc. min., vol. 15, p. 13, 1892.
[c] Neues Jahrb., Beil. Bd. 9, p. 485, 1894. A later paper by Pfaff is published in vol. 24, p. 529, 1907.
[d] Centralbl. Min. Geol. Pal., 1903, p. 659.
[e] Am. Jour. Sci., 3d ser., vol. 39, p. 121, 1890.
[f] Described by Genth, Zeitschr. Kryst. Min., vol. 14, p. 255, 1888.
[g] Bull. Soc. min., vol. 14, p. 60, 1891.

notable amounts of magnesia may be described by this name. Properly, the word should be restricted to the definite double carbonate, which occurs both as a well-crystallized mineral and as a massive rock. When, after allowing for natural impurities, the molecular ratio of lime to magnesia in such a rock is 1:1, it is legitimately, at least in most cases, a dolomite, but exceptional mixtures are of course possible. Ordinarily, a magnesian limestone is a mixture of dolomite and calcite, with such impurities as sedimentary rocks and limestones in general are likely to contain. In these rocks the ratio of lime to magnesia is greater than 1:1; but in computation it must be remembered that some dolomites contain iron, which replaces magnesia in equivalent amounts. Ferruginous dolomite, or ankerite, is not rare. All the iron of a carbonate rock, however, is not necessarily a part of the carbonate. It may be present as hydroxide or in claylike impurities, and these possibilities must be taken into account in any interpretation of the dolomites. In some cases free magnesian carbonates must also be considered, and in certain alteration products, brucite, MgO_2H_2, may also occur. Commonly the dolomites are fairly simple in composition and difficulties in interpreting the analyses rarely arise.

In the study of natural dolomites as well as in the synthetic experiments which have just been described, it is often necessary to discriminate between the separate carbonates and the true double salt. In most cases this is easily done by taking advantage of differences in solubility. Calcite and aragonite dissolve easily in weak acetic or hydrochloric acid; dolomite and magnesite, at ordinary temperatures, are attacked slowly.[a] These magnesian carbonates are not absolutely insoluble in dilute acids, but they are sufficiently resistant to admit of a rough separation from calcite, and their subsequent identification. From a mixture of dolomite and calcite, cold dilute acetic acid will dissolve the latter mineral, leaving nearly all of the dolomite unattacked. From mixtures of calcite and magnesite, on the other hand, all of the lime will be thus removed. Some magnesia also may pass into solution, for as Vesterberg has shown, there are magnesian carbonates, probably basic or hydrous, which dissolve with ease. Magnesite is even more refractory toward solvents than dolomite.

Furthermore, discrimination between calcite and dolomite can be effected by microchemical tests. Among the best of these is that

[a] Upon these differences in solubility, there is an abundant literature, which has been well summarized by A. Vesterberg, Bull. Geol. Inst. Upsala, vol. 5, p. 97, 1901; vol. 6, p. 254, 1905. See also the synthetic papers already cited, and Haushofer, Sitzungsb. Akad. München, vol. 11, p. 220, 1881.

described by J. Lemberg,[a] whose reagent consists of a solution of aluminum chloride and hæmatoxylin (extract of logwood). This reagent deposits a violet coating upon calcite surfaces, but leaves dolomite uncolored. According to F. Cornu,[b] the two minerals are easily distinguished by covering the powdered material with water and adding a few drops of phenolphthalein solution. Calcite gives a strong coloration; dolomite is affected but slightly.

So far as the experimental evidence goes, dolomite can be formed in several ways. In specific cases, however, field evidence must be brought to bear. First, dolomite may exist as a true chemical sediment, although occurrences of this kind are probably rare. G. Leube[c] described a "fresh-water dolomite" near Ulm, in Bavaria; and C. W. Gümbel,[d] studying the dolomites of the same region, which are interbedded with limestones, likewise asserts their sedimentary origin. T. Scheerer[e] also argues that the oldest dolomites were formed as chemical precipitates; and T. Sterry Hunt's[f] positive views on this subject are well known. Hunt's experiments help us to understand how sediments of dolomite may perhaps be formed; and it is also possible that algæ may precipitate mixed carbonates just as they do calcareous marl. When the carbonates are thrown down together, heat and pressure may combine to bring about their union. These suggestions relate to possibilities only; and it would be rash to assert positively that dolomites are ever formed on a large scale by direct sedimentation.

Magnesian carbonates are, however, deposited with calcium carbonate by marine organisms, albeit in small relative amounts. G. Forchhammer[g] made many analyses of shells and corals, finding magnesium carbonate in them in percentages ranging from 0.15 to 7.64, 1 per cent being rather above the average. This result has been confirmed by many other investigators. In *Lithothamnium nodosum* Gümbel[h] found 2.66 per cent of MgO and 47.14 of CaO; and Högbom[i] in fourteen analyses of algæ belonging to this genus reports from 1.95 to 13.19 per cent of $MgCO_3$. To these higher figures reference will be made later.

---

[a] Zeitschr. Deutsch. geol. Gesell., vol. 40, p. 357, 1888. In vol. 39, p. 489, 1887, Lemberg describes tests based upon the use of ferric chloride and ammonium sulphide. In a still earlier paper (op. cit., vol. 24, p. 226, 1872) Lemberg gives tests with silver nitrate, which stains calcite and dolomite, after ignition, unequally. See also Otto Meyer, Zeitschr. Deutsch. geol. Gesell., vol. 31, p. 445, 1879.

[b] Centralbl. Min. Geol. Pal., 1906, p. 550.

[c] Neues Jahrb., 1840, p. 371.

[d] Sitzungsb. Akad. München, 1871, Heft 1, p. 45.

[e] Neues Jahrb., 1866, p. 1.

[f] See Chemical and Geological Essays, p. 80, and the literature already cited.

[g] Neues Jahrb., 1852, p. 854.

[h] Abhandl. Akad. München, vol. 11, p. 26, 1871.

[i] Neues Jahrb., 1894, vol. 1, p. 262. The analyses were made by a number of chemists for Högbom, who gives data for several shells and corals also. In the latter organisms the magnesia was low.

From these data it is clear that limestones formed by marine organisms must contain magnesia, and evidence shows that as a rule they contain rather more of it proportionally than the remains from which they are made. The analyses of oceanic oozes collected by the *Challenger* expedition, as discussed by Högbom,[a] show this fact very well, and also illustrate the tendency of the magnesium carbonate to accumulate, while the more soluble calcium carbonate is dissolved away. That is, by the leaching of these deposits they become relatively enriched in magnesia, until in the extreme cases something very near the true dolomite ratio is attained. In short, a dolomite may be produced by concentration from a magnesian limestone, and either sea water or percolating waters of atmospheric origin may operate in this way. Grandjean [b] was probably the first to interpret certain dolomites as having been formed by this process; a view which various other writers have adopted and which is well developed in Högbom's memoir. Högbom, in addition to the facts already cited, brings other important evidence to bear upon the problem. He shows that stalactites from caverns in the coral rocks of Bermuda contain only 0.18 to 0.68 per cent of magnesium carbonate, while the rocks themselves carry about five times as much.[c] Here the lime salt has dissolved much more freely than the magnesium compound. Högbom also studied the marine marls of Sweden, and found that the transported material contained progressively larger proportions of magnesium carbonate, as its distance from the parent limestone increased. Near its point of origin the marl carried 3.7 parts of $MgCO_3$ tc 100 of $CaCO_3$; and from these figures the ratio was gradually raised to 36 $MgCO_3$ and 100 $CaCO_3$. In these finely divided sediments the leaching out of calcium carbonate by atmospheric and glacial waters is naturally rapid, and the concentration of the dolomitic portion is effected with great ease. This mode of concentration, then, must be recognized as real, and as accounting in part at least for the formation of dolomite.[d] But it is not the whole story. It accounts for some occurrences, but not all.

Coral rock, it will be remembered, consists chiefly of calcium carbonate, which in the living forms is mineralogically aragonite. But in 1843 J. D. Dana,[e] in a rock from the coral island of Makatea, in the Pacific, reported magnesium carbonate to the extent of 38.07 per cent. This approached the dolomite ratio, which requires 45.7 per

---

[a] Op. cit., p. 267.

[b] Neues Jahrb., 1844, p. 543.

[c] It is well known that stalactites from caverns in dolomitic limestones consist essentially of calcium carbonate, with little or no magnesia.

[d] For an elaborate discussion of this side of the dolomite problem see G. Bischof, Lehrb. chem. phys. Geol., 2d ed., pp. 52–91. The older data are well summarized. See also C. W. Hall and F. W. Sardeson, Bull. Geol. Soc. America, vol. 6, p. 189, 1894.

[e] *See Dana's* Coral and Coral Islands, 3d ed., p. 393. Analyses by B. Silliman, jr. The *island is called* Metia by Dana.

cent, and the thought was at once suggested that the rock had been dolomitized by the introduction of magnesia from sea water, the latter having possibly been first concentrated by evaporation in a shallow lagoon.

Since Dana's observation was made, many other investigators have recorded similar enrichments of coral reefs, and the synthetic experiments of various chemists, as cited in the preceding pages, have shown that the indicated reaction can actually take place. Klement's experiments, especially, have helped to make this point clear. In a coral reef from Porta do Mangue, Brazil, J. C. Branner[a] reports 6.95 per cent of magnesia, equivalent to 14.5 of carbonate, while the corals themselves contined only 0.20 to 0.99 per cent of MgO. In the islands of the Pacific Ocean a large number of similar cases have been observed, the analyses by E. W. Skeats[b] rising to a maximum of 43.3 per cent of $MgCO_3$. From instances of this kind, and from the resemblance of many dolomites to reef rocks, it has been commonly inferred that dolomitization is generally, or at least often, effected in this way, lime being gradually removed and replaced by magnesia from the sea.[c]

The most striking illustration of this mode of transformation is furnished by the borings on the atoll of Funafuti, as discussed by J. W. Judd.[d] The principal boring was driven to a depth of over 1,100 feet, through coral and coral rock all the way, and samples of the cores were analyzed for practically every 10 feet of the distance. From the table of data presented by Judd, the following figures are selected:

Magnesium carbonate in borings on atoll of Funafuti.

Depth, feet.	Percentage $MgCO_3$.	Depth, feet.	Percentage $MgCO_3$.
4	4.23	295	3.6
13	7.62	400	3.1
15	16.4	500	2.7
20	11.99	598	1.06
26	16.0	640	26.33
55	5.85	698	40.04
110	2.11	795	38.92
159	0.79	898	39.99
200	2.7	1,000	40.56
250	4.9	1,114	41.05

These figures are very remarkable. They show, first, an enrichment in magnesium carbonate near the surface, then an irregular rising

[a] Bull. Mus. Comp. Zool., vol. 44, p. 264, 1904. Analysis of rock by R. E. Swain, of the corals by L. R. Lenox.

[b] Idem, vol. 42, pp. 53-126, 1903.

[c] See R. Harkness, Quart. Jour. Geol. Soc., vol. 15, p. 103, 1859, on dolomite near Cork, Ireland. Also C. Doelter and R. Hoernes, Jahrb. K.-k. geol. Reichsanstalt, vol. 25, p. 293. These authors give a bibliography of dolomitization, down to 1875, the date of their memoir.

[d] The Atoll of Funafuti, published by the Royal Society, London, 1904. For Judd's report on the chemical examination, see pp. 362–389.

and falling in much smaller amounts, while below 700 feet the approach to a dolomite ratio is apparent. The surface enrichment Judd attributes to a possible leaching out of lime salts, and the irregularities may be due in part to differences in the proportions of the various reef-forming organisms. Some of these are more soluble than others, as we have already seen. Algæ, especially *Lithothamnion* and *Halimeda*, are abundant at Funafuti, and Judd suggests that the abnormally high magnesia found by Högbom in these organisms may also be due to leaching, possibly aided by carbon dioxide derived from the decomposition of the plants after death. The replacement of lime by magnesia extracted from sea water probably takes place at the same time, so that two distinct processes combine to produce the final result. It is noticeable that the lower portions of the core, which were the earliest deposited and have therefore been acted upon for the longest time, are the most completely changed.

In this double process of leaching and replacement, we find the nearest approach to a satisfactory theory of dolomitization in coral reefs. It is, however, not general, as the following analyses by George Steiger,[a] of borings from an artesian well at Key West, Florida, clearly show:

Lime and magnesia in borings at Key West.

Depth, feet.	Percentage CaO.	Percentage MgO.	Depth, feet.	Percentage CaO.	Percentage MgO.
25	54.03	0.29	1,325	54.49	0.62
100	54.01	.77	1,400	55.12	.30
150	54.38	.86	1,475	54.48	.73
350	51.46	1.67	1,625	53.90	1.14
600	48.87	2.50	1,850	54.28	1.12
775	46.53	6.70	2,000	54.02	1.06
1,125	53.84	.86			

Here there is a progressive magnesian enrichment down to 775 feet, and then a falling off, but no such thorough alteration appears as at Funafuti. What different conditions may have existed to account for these differences of composition is not known.

It is of course evident that dolomitization by replacement need not be limited to the action of sea water upon coral reefs. Magnesian spring waters may be equally effective, and are so locally, as observed by J. E. Spurr[b] in the rocks about Aspen, Colorado. In that region hot springs containing magnesium are manifestly operative in transforming limestone to dolomite. But large areas of dolomite are not likely to originate in that way. Where, however, limestones are

[a] Analyses made in the laboratory of the United States Geological Survey. Published in full in Bull. No. 228, p. 309, 1904. Boring described by E. O. Hovey, Bull. Mus. Comp. Zool., vol. 28, p. 63, 1896.

[b] Mon. U. S. Geol. Survey, vol. 31, p. 206, 1898. Spurr (p. 216) also reports an interesting silicification of limestones, which is visible in all its stages. The final product is made up of quartz grains.

situated near magnesian eruptive rocks, dolomitization due to this cause is to be anticipated.

The following analyses of magnesian limestones were made in the laboratory of the United States Geological Survey.[a] Other analyses in abundance are scattered through the literature of limestones.

Analyses of magnesian limestones.

A. Green Peak Quarry, Dorset, Vermont. Analysis by George Steiger. Described by T. N. Dale in Bull. No. 195, 1902.

B. "Knox dolomite," Morrisville, Alabama. Analysis by W. F. Hillebrand. Described by I. C. Russell in Bull. No. 52, 1889.

C. Penokee district, Wisconsin. Analysis by Hillebrand. See R. D. Irving and C. R. Van Hise, in Mon., vol. 19, 1892.

D. "Niobrara dolomite," Denver Basin, Colorado. Analysis by L. G. Eakins. Described by Emmons in Mon., vol. 27, 1896.

E. Near Red Mountain, Silver Peak district, Nevada. Analysis by Steiger.

F. The theoretical composition of ideally pure dolomite.

	A.	B.	C.	D.	E.	F.
Insoluble				12.01	0.31	
SiO_2	8.36	3.24	0.63			
Al_2O_3	1.77	.17		.54		
Fe_2O_3	.22	.17	.03	.11		
FeO	1.08	.06	.75		1.89	
MnO			.08	.20		
MgO	16.68	20.84	20.68	18.03	20.19	21.9
CaO	29.03	29.58	30.94	27.49	30.35	30.4
Na_2O	.06					
K_2O	1.08					
H_2O-	.03	.30	.27	.61		
H_2O+	.42					
CO_2	41.66	45.54	46.27	41.40	47.21	47.7
P_2O_5				.03		
Cl			trace			
	100.39	99.90	99.65	100.42	99.95	100.0

Under ordinary atmospheric and aqueous conditions dolomite alters like limestone, but less readily. By volcanic agencies, that is, the combined action of heated or fused rocks and steam, dolomite is sometimes transformed into a substance which was once thought to be a distinct mineral species, and was named predazzite and pencatite by different investigators. This substance has been interpreted by Damour,[b] G. Hauenschild,[c] J. Roth,[d] and J. Lemberg,[e] as a mixture of calcite and brucite, MgO_2H_2. O. Leneček,[f] however, regards it as a mixture of calcite and hydromagnesite, the latter being partly pseudomorphous after periclase and partly an infiltration. In either case the dolomite has been altered by the transformation of its magnesium carbonate into a basic salt or into hydroxide. The latter

[a] See Bull. No. 228, pp. 301–335, 1904, for these analyses and others.

[b] Bull. Soc. géol., 2d ser., vol. 4, p. 1050, 1847.

[c] Sitzungsb. Akad. Wien, vol. 60, p. 795, 1870.

[d] See Allgem. chem. Geol., vol. 1, pp. 422–425. Roth cites many analyses of altered dolomites, and gives the data concerning predazzite with considerable fullness.

[e] Zeitschr. Deutsch. geol. Gesell., vol 24, p. 187, 1874.

[f] Min. pet. Mitth., vol. 12, pp. 429, 447, 1892. Leneček gives a good summary of the literature of predazzite.

compound, under some conditions, can be leached away, leaving nearly pure calcite; or it may be dehydrated, forming periclase, MgO. Predazzite was first observed at Predazzo, in the Tyrol; and Lemberg, by acting on normal dolomite from that locality with steam, obtained a similar product. A like alteration of dolomite from a Russian locality was also reported by F. Rosen.[a]

IRON CARBONATE.

Another important rock-building carbonate is siderite, the ferrous carbonate $FeCO_3$. Its formation as bog ore has already been considered,[b] together with its transformation into limonite, but its relations to limestone and dolomite remain to be noticed. Between these rocks there are many transitional mixtures, and ankerite, the ferriferous dolomite, is one of them. This mineral contains iron replacing magnesium, to use the ordinary phraseology, but this implies that the double salt $CaFeC_2O_6$ exists isomorphous with and equivalent to the magnesian compound, dolomite. The two salts, $CaFeC_2O_6$ and $CaMgC_2O_6$, may commingle in any proportion, and varieties containing manganese carbonate are also known. So, too, there are mixtures of magnesite and siderite, known as breunnerite, mesitite, and pistomesite, but they are comparatively unimportant except in the study of isomorphism. The manganese carbonate, rhodochrosite, $MnCO_3$, is usually a mineral of metalliferous veins.

As bog ore, siderite is deposited from a bicarbonate solution in presence of organic matter and out of contact with air. But siderite, like dolomite, may also be formed by replacement when iron solutions act upon limestones. H. C. Sorby[c] found that Iceland spar immersed in a solution of ferrous chloride was slowly transformed into crystalline siderite; in ferric chloride, on the other hand, ferric hydroxide was formed. A similar precipitation of limonite was observed by G. Keller[d] when calcite was treated with ferric sulphate. Reactions of this kind have often been invoked in the interpretation of sedimentary iron ores. J. P. Kimball,[e] for example, regards the reaction of ferrous solutions upon limestones as of the highest importance, and refers to isolated masses of coral reef in Cuba which have been so replaced by iron compounds. Fossils, originally calcareous, but now composed of limonite, are not rare. In the Jurassic limestones of central France ores of iron, manganese, and zinc are widely disseminated. According to L. Dieulafait,[f] these ores were precipitated from solution by calcium carbonate, the iron first, zinc

[a] Arch. Naturkunde Liv., Esth. u. Kurlands, 1st ser., vol. 3, p. 142, 1864.
[b] See *ante*, p. 452.
[c] Quart. Jour. Geol. Soc., vol. 35, Proc., p. 73, 1879.
[d] Neues Jahrb., 1882, pt. 1, ref., p. 363.
[e] Am. Jour. Sci., 3d ser., vol. 42, p. 231, 1891.
[f] Compt. Rend., vol. 100, p. 662, 1885.

and manganese later. The iron ores are always at the bottom of the series, and the other metals are found in the overlying limestones.

Like carbonate of lime, iron carbonate may be removed from solution by aquatic vegetation. The process, however, is different in one particular. Ferrous carbonate is easily oxidized to limonite, and that change, which takes place in air alone, is doubtless accelerated by the oxygen which the plants exhale. The deposit formed is not siderite then, but hydroxide. Similar precipitation of limonite may also occur from sulphate solutions, as in or near a chalybeate spring in Death Gulch, Yellowstone National Park. Here, according to W. H. Weed,[a] the mosses form, from the water of the spring, an iron sinter which was analyzed by J. E. Whitfield in the laboratory of the United States Geological Survey with the following results:

Analysis of iron sinter.

SiO_2	1.37
Fe_2O_3	63.03
Al_2O_3	.08
SO_3	8.35
H_2O and organic matter	26.94
	99.77

The instability of ferrous carbonate is also shown by the deposits of iron rust around iron-bearing springs in general, and by the formation of stalactites of limonite. Such stalactites were formed exactly like calcite stalactites, by carbonate solutions, only the iron salt has decomposed and left residues of hydroxide. According to T. Sterry Hunt[b] the alteration of siderite to limonite is attended by a contraction of 27.5 per cent, whence limonite ore bodies are often porous or spongy.

The vast deposits of iron ores in the Lake Superior region, limonites, hematites, magnetites, etc., are now regarded as being in great measure secondary bodies derived from iron carbonates of sedimentary origin. The process by which their concentration was probably effected has been summed up by C. R. Van Hise[c] as follows: First, meteoric waters attacked the upper portions of the original carbonate, oxidizing the latter to limonite. In so doing the waters lost their dissolved oxygen and became carbonated. In this condition the waters dissolve ferrous carbonate, with some silicate, and transfer it to lower levels. Later, the surface oxidation having been com-

[a] Am. Geologist, vol. 7, p. 48, 1891.

[b] Canadian Naturalist, vol. 9, p. 431, 1881.

[c] Twenty-first Ann. Rept. U. S. Geol. Survey, pt. 3, p. 326, 1900. Monographs 19, 28, 36, 43, 45, and 46 of the Survey, by Irving, Van Hise, Clements, Smyth, Bayley, and Leith, deal exhaustively with these "Lake Superior" ores. See also J. E. Spurr, Bull. No. 10, Geol. Nat. Hist. Survey Minnesota, 1894, on the Mesabi ores; and S. Weidman, Bull. No. 13, Wisconsin Geol. Nat. Hist. Survey, 1904, on the Baraboo district. Bull. No. 6 of the Minnesota Survey, 1891, by N. H. and H. V. Winchell, is devoted to a discussion of the Minnesota deposits.

pleted, waters charged with atmospheric oxygen percolate downward, mingle with the iron solutions previously formed, and precipitate limonite. The latter, by heat and pressure, may be transformed to hematite. A similar interpretation is given by A. Brunlechner[a] to the associated siderite and limonite at Hüttenberg in Carinthia. In this case, however, the waters charged with ferrous carbonate redeposit it upon contact with limestones. Here also the original formation, the main ore body, is sedimentary.

The following analyses represent mixed carbonates, mainly ferriferous:

Analyses of mixed carbonates.

A. Iron carbonate, Sunday Lake, Michigan. Analysis by W. F. Hillebrand.
B. Iron carbonate, Penokee district, Michigan. Analysis by R. B. Riggs.
C. Iron carbonate, Gunflint Lake, Canada. Analysis by T. M. Chatard.
D. Ferrodolomite, Marquette district, Michigan. Analysis by G. Steiger. For analyses A, B, C, D, and others, see Bull. U. S. Geol. Survey No. 228, pp. 318–320, 1904.
E. Cobaltiferous siderite, from a mine near Neunkirchen, Germany. Analysis by G. Bödlander, Neues Jahrb., 1892, pt. 2, p. 236.
F. Mangandolomite, Greiner, Tyrol. Analysis by K. Eisenhuth, Zeitschr. Kryst. Min., vol. 35, p. 582, 1902. Other analyses of dolomite, etc., are given in this paper.

	A.	B.	C.	D.	E.	F.
Insoluble						0.16
SiO_2	28.86	15.62	23.90	26.97		
TiO_2	.20		none			
Al_2O_3	1.29	4.27	.07	1.30		
Fe_2O_3	1.01	8.14	.44	2.31		
FeO	37.37	32.85	10.72	39.77	45.34	6.59
MnO	.97	5.06	.28	.29		23.41
CoO					3.85	
CaO	.74	.81	22.25	.66	1.21	10.48
MgO	3.64	2.66	8.52	1.94	8.80	14.58
Alkalies				.09		
H_2O-	.68	.68	none	.10		
H_2O+			.99	.51		
P_2O_5			trace	.03		
CO_2	25.21	30.32	32.42	26.20	41.55	45.59
SO_3			.17			
	99.97	100.41	99.76	100.17	100.75	100.81

SILICATED IRON ORES.

In addition to siderite, certain sedimentary silicates serve as sources for limonite and hematite ores. Glauconite, for example, was suggested by R. A. F. Penrose[b] as a possible parent of iron ore, and a green silicate from which the Mesabi ores are derived was placed under glauconite by J. E. Spurr.[c] C. K. Leith,[d] however, in his report on the Mesabi district, has shown that the green mineral of the ferruginous cherts is not glauconite, but a hydrated ferrous or ferroso-ferric silicate, containing no potassium. To this silicate he gives the name greenalite. Its composition, as shown by the anal-

[a] Zeitschr. prakt. Geol., 1893, p. 301.
[b] Ann. Rept. Geol. Survey Arkansas, vol. 1, 1892. This is a monograph on the iron ores of Arkansas.
[c] Bull. No. 10, Geol. Nat. Hist. Survey Minnesota, 1894.
[d] Mon. U. S. Geol. Survey, vol. 43, pp. 237–279, 1903.

yses made by G. Steiger[a] in the laboratory of the United States Geological Survey, is not accurately determinable, for the green granules can not be mechanically separated from the enveloping chert. Three analyses of the portion of the rock soluble in hydrochloric acid gave the following results, after union of like bases and recalculation to 100 per cent. For comparison with them, in a fourth column, I give an analysis by F. Field[b] of a green, massive, chloritic mineral associated with the cronstedtite of Cornwall:

Analyses of greenalite, etc.

	Greenalite, Steiger.			Cornwall, Field.
	1.	2.	3.	
SiO_2	30.08	30.49	38.00	31.72
Fe_2O_3	34.85	23.52	8.40	18.51
FeO	25.72	36.92	46.56	39.46
H_2O	9.35	9.07	7.04	11.02
	100.00	100.00	100.00	100.71

Field's mineral and the greenalite No. 2 are very similar, and approach in composition a hydrated compound of the garnet type, $Fe'''_2Fe''_3(SiO_4)_3.3H_2O$. The third greenalite analysis, however, is of an almost entirely ferrous compound, a hydrous metasilicate approaching the formula $FeSiO_3$.aq. It is evident that the absolutely definite silicate is yet to be identified.

In the analyses cited the soluble green granules formed from 48 to 82.5 per cent of the entire greenalite rock, which, according to Leith, represents a marine sediment analogous to glauconite. From this silicate, by leaching, the hydrous hematites of the Mesabi district were concentrated; but the reactions proposed by Leith to account, first, for the greenalite and, later, for its decomposition are largely hypothetical. Iron, in solution as carbonate, was probably brought into the ocean by waters from the land, and precipitated as ferric hydroxide. The latter compound, partly or wholly reduced to the ferrous state by organic matter derived from marine vegetation, then combined with silica, of which an excess, now represented by chert, was also present. These processes are possible, and the explanation thus offered to account for the iron-bearing rocks is probable enough to be provisionally held, at least until something better is offered. We know that ferruginous sediments are now forming in the ocean; we know that chert, in many cases, is of organic origin; and these facts are consistent with the suppositions summarized above.

At a number of European localities iron ores are found which consist partly of silicates. One of these, thuringite, is a member of the

[a] See Leith, op. cit., p. 246. Discussion by F. W. Clarke.
[b] Phil. Mag., 5th ser., vol. 5, p. 52, 1878.

chlorite group; but another chloritic mineral, chamosite, which occurs associated with magnetite, limonite, or hematite in oolitic aggregations, is more definitely an ore of iron. Its composition, as determined by C. Schmidt [a] on Swiss material, and by E. R. Zalinski [b] on Thuringian specimens, is represented by the empirical formula $3FeO.Al_2O_3.2SiO_2.3H_2O$. The much rarer mineral cronstedtite has probably the same formula, with ferric oxide in place of alumina; and it differs from greenalite, as represented by the second analysis of the latter, in containing one less molecule of silica. Berthierine, from Hayanges, near Metz, is essentially a mixture of chamosite and magnetite,[c] and forms a valuable ore.

These silicates all undergo alteration with great ease, yielding oxides or hydroxides of iron. In most cases the ores containing them are oolitic, and form beds of sedimentary origin.[d] In this respect they resemble glauconite and greenalite, with which, chemically, they are so closely allied. How they were formed is uncertain, and different authorities interpret the evidence differently. The latest writer, E. R. Zalinski,[e] regards thuringite and chamosite as secondary products, derived by alteration from earlier sediments at the bottom of the Lower Silurian sea. Whatever the final conclusion may be, it seems clear that glauconite, chamosite, and greenalite, and possibly other allied silicates, were all formed by similar reactions, different local conditions having determined which product should appear.[f]

GYPSUM.

The occurrence of gypsum as a sedimentary rock has already been partially considered.[g] It may form on a large scale during the concentration of oceanic and other natural brines, and it is sometimes deposited from solution in fresh waters. Acid waters of volcanic

[a] Zeitschr. Kryst. Min., vol. 11, p. 601, 1886.

[b] Neues Jahrb., Beil. Bd. 19, p. 40, 1904.

[c] See A. Lacroix, Minéralogie de la France, vol. 1, p. 401, for this and other French occurrences.

[d] On the ores, locally known as "minette," of Luxemburg and Lorraine, see Bleicher, Bull. Soc. indust. de l'Est, 1894; L. Hoffman, Verhandl. Naturhist. Ver. preuss. Rheinland, etc., vol. 55, p. 109, 1898; H. Ansel, Zeitschr. prakt. Geol., 1901, p. 81; and L. van Werveke, idem, p. 396. On the Thuringian ores see H. Loretz, Jahrb. K. preuss. geol. Landesanstalt, 1884, p. 120. Much other literature is cited in the memoirs mentioned here.

[e] Neues Jahrb., Beil. Bd. 19, p. 79, 1904. Zalinski gives a good summary of the various theories which have been framed in order to account for these ores.

[f] In addition to the literature already cited, the following American reports on iron ores are worth noticing: W. B. Phillips, Iron Making in Alabama, a bulletin issued by the Alabama Geol. Survey in 1898. S. W. McCallie, Bull. No. 10–A, Geol. Survey Georgia, 1900, on the brown iron ores of that State. H. B. C. Nitze, Bull. No. 1, North Carolina Geol. Survey, 1893. F. L. Nason, Report on Iron Ores, Missouri Geol. Survey, 1892. Rept. of Progress F, Second Geol. Survey Pennsylvania, 1878, on the ores of the Juniata Valley. E. T. Dumble, Reports on the iron-ore district of East Texas: Second Ann. Rept. Texas Geol. Survey, 1891. The most exhaustive general treatise is R. Beck's great monograph, Die Geschichte des Eisens.

[g] See *ante*, pp. 173–185.

origin,[a] or derived from the oxidation of pyrite, by acting upon limestones, also produce gypsum. Its appearance as an accessory mineral in dolomitization is due to double decomposition between limestone and solutions containing magnesium sulphate; and other sulphates may act in a similar way. L. Jowa,[b] for example, prepared crystals of selenite by acting upon chalk with a solution of ferrous sulphate. Gypsum formed by reactions of this order, however, is commonly dissolved by the waters which assist in the process, and is carried away to be diffused or deposited elsewhere. As an important rock gypsum is generally a saline residue. Its formation in the first instance is probably oftener due to the action of oxidizing pyrite upon lime-bearing rocks than to any other cause.[c]

NATIVE SULPHUR.

Native sulphur is a frequent companion of gypsum, and this, too, may be produced in several ways. It is known as a volcanic sublimate, and is a product of reactions between sulphur dioxide and hydrogen sulphide. It is also formed by the incomplete combustion of hydrogen sulphide, probably in accordance with the equation $2H_2S+O_2=2H_2O+2S$.[d] According to Becker, who studied the phenomena at Sulphur Bank, California, the oxidation of H_2S to H_2SO_4 develops 201,500 calories. The oxidation to H_2O+S develops only 59,100 calories. Hence, where oxygen is in excess, as at the surface, hydrogen sulphide is completely oxidized, and sulphuric acid is formed. A short distance below the surface oxygen is deficient, and then sulphur is liberated. Probably, however, the actual conditions are more complex. Sulphur dioxide must be produced to some extent and that reacts with the hydrogen sulphide to form sulphur also. At all events, sulphuric acid and free sulphur both occur at Sulphur Bank, and in accordance with the conditions imposed by theory. The deposition of sulphur at the Rabbit Hole mines, Nevada, is also ascribed by G. I. Adams[e] to solfataric activity.

Sulphur deposits are common around mineral springs, being due to the imperfect oxidation of hydrogen sulphide; and the latter compound may be generated, either by the action of acid waters upon sulphides, or through the reduction of sulphates, such as gypsum,

---

[a] J. W. Dawson (Acadian Geology, p. 262, 1891) attributes the formation of gypsum in Nova Scotia to the action of sulphuric acid, derived from volcanic sources, on limestones.

[b] Ann. Soc. géol. Belg., vol. 23, p. cxxviii, 1896.

[c] For data upon American gypsum see G. P. Grimsley, Geol. Survey Michigan, vol. 9, pt. 2, 1904; Grimsley and E. H. S. Bailey, Univ. Geol. Survey Kansas, vol. 5, 1899; C. R. Keyes, Iowa Geol. Survey, vol. 3, pp. 257–304; F. J. H. Merrill, Bull. New York State Mus., vol. 3, No. 11, 1893. Bull. U. S. Geol. Survey No. 223, 1904, by G. I. Adams and others, describes the gypsum deposits of the United States.

[d] See G. F. Becker, Mon. U. S. Geol. Survey, vol. 13, p. 254, 1888; and J. Habermann, Zeitschr. anorg. Chemie, vol. 38, 1904, p. 101.

[e] Bull. U. S. Geol. Survey No. 225, p. 497, 1904.

by micro-organisms.[a] The interpretation of any given locality for sulphur is not easy, for different conditions reign in different places. In one deposit the evidence of thermal reduction may be clear, while elsewhere some other process is seen to have been operative. The most famous of all sulphur deposits is that near Girgenti, in Sicily, and this has been variously interpreted. Gypsum, sulphur, celestite, and aragonite are here intimately associated, in what is evidently a sedimentary formation not far removed from a center of great volcanic activity. The sulphur, therefore, has been regarded by some writers as volcanic, by others as a product of nonvolcanic agencies, and the conditions are such that either supposition can be strongly supported. Sicily abounds in solfataras, and in springs charged with hydrogen sulphide; and these may well have brought the sulphur from volcanic sources far below the surface. Its deposition, in that case, is due to the decomposition of hydrogen sulphide, which has taken place under aqueous rather than igneous conditions; and this view, with differences in detail, has been adopted by various authorities.[b] A. von Lasaulx,[c] for example, has argued that the sulphur was deposited from waters containing hydrogen sulphide and calcium carbonate during concentration in fresh-water basins; and G. Spezia[d] has developed a similar argument more fully. In order to account for the association of sulphur and gypsum without assuming the derivation of one from the other, Spezia cites an observation of A. Béchamp,[e] who found that when hydrogen sulphide was passed into water containing suspended calcium carbonate the latter was partly decomposed and calcium hydrosulphide was formed. This experiment was repeated by Spezia,[f] but with fragments of marble and under a pressure of six atmospheres. The solution thus obtained was found to contain a sulphide, and upon evaporation to small bulk at ordinary temperatures it deposited microscopic crystals of calcite, sulphur, and gypsum. By a reaction of this kind, between the sedimentary limestones and the ascending sulphureted waters, the observed association of minerals may have been produced. Wherever such waters act slowly upon limestones free sulphur with gypsum is likely to be formed.[g] It must be observed, however, that

[a] See especially E. Plauchud, Compt. Rend., vol. 84, p. 235, 1877; vol. 95, p. 1363, 1882. Also A. Etard and L. Olivier, idem, vol. 95, p. 846, 1882.

[b] R. Travaglia (Bol. Com. geol., 1889, p. 110), however, regards the Sicilian sulphur as having been formed through the reduction of gypsum by organic matter, the remains of marine animals.

[c] Neues Jahrb., 1879, p. 490.

[d] Sull' origine del solfo nei giacimenti solfiferi della Sicilia, Torino, 1892. The theories relative to the origin of Sicilian sulphur are exhaustively summed up and discussed in this memoir. Several Italian works, cited by Spezia, I have not been able to consult.

[e] Ann. chim. phys., 4th ser., vol. 16, p. 234, 1869.

[f] Op. cit., p. 119.

[g] Other examples are given by R. Brauns, Chemische Mineralogie, p. 366. L. Dieulafait (Compt. Rend., vol. 97, p. 51, 1883) has suggested that polysulphides of calcium and strontium may assist in the formation of sulphur deposits.

the partial oxidation of hydrogen sulphide in presence of limestone would also produce the same association of substances. It is interesting to note that in a large crystal of gypsum from Cianciana, H. Sjögren[a] found a fluid inclusion which yielded liquid enough for analysis. Its composition resembled that of sea water, and the cavity also contained hydrogen sulphide.

The considerable deposits of sulphur found in western Texas are also associated with gypsum, and with waters which contain hydrogen sulphide. Some waters from the sulphur beds are strongly acid, and E. M. Skeats[b] reports one water which carried 1,360 parts per million, or 79.08 grains per gallon, of free H_2SO_4. The deposits are associated with limestones, which are sometimes bituminous, and at some points, as described by Richardson, gypsum has evidently been formed by alteration of the carbonate. At Cove Creek, in Utah, sulphur occurs in great quantities as an impregnation of limestone and shale, and gypsum is also abundant.[c] So far as the sedimentary rocks are concerned, the association of limestone, gypsum, sulphur, and hydrogen sulphide seems to be quite general, although not absolutely invariable. The association of sulphur with petroleum or bituminous matter is also common.

CELESTITE.

Celestite, the sulphate of strontium, $SrSO_4$, is another mineral of the sedimentary rocks, which also occurs in Sicily with the gypsum and sulphur. It is one of the most characteristic minerals of the Sicilian deposits. In Monroe County, Michigan, according to E. H. Kraus and W. F. Hunt,[d] the celestite is found disseminated through dolomite, and the upper layer of the rock at the point especially studied contained over 14 per cent of the strontium compound. Below this layer there is a porous stratum, with cavities containing celestite and free sulphur. The latter is found in considerable quantities, and is evidently derived by reduction from the sulphate. Kraus[e] has also reported celestite as extensively disseminated through dolomitic limestone near Syracuse, New York. At Put-in-Bay, Lake Erie, the limestones contain disseminated celestite, and caverns exist which are lined with crystals of that mineral.[f]

[a] Bull. Geol. Inst. Upsala, vol. 1, No. 2, 1893. A similar inclusion was earlier described by O. Silvestri, Gazz. chim. ital., vol. 12, p. 9, 1882.

[b] Univ. Texas Mineral Survey, Bull. No. 2, 1902. See also G. B. Richardson, idem, Bull. No. 9, p. 68, 1904. The sulphur deposits of Louisiana are described by L. Baldacci, Il giacimento solfifero della Louisiana, Rome, 1906.

[c] See G. vom Rath, Neues Jahrb., 1884, pt. 1, p. 259. Vom Rath regards this deposit as of volcanic (or solfataric?) origin.

[d] Am. Jour. Sci., 4th ser., vol. 21, p. 237, 1906. See also W. H. Sherzer, idem, 3d ser., vol. 50, p. 246, 1895; and Geol. Survey Michigan, vol. 7, pt. 1, p. 208, 1900.

[e] Am. Jour. Sci., 4th ser., vol. 18, p. 30, 1904.

[f] Kraus, Am. Jour. Sci., 4th ser., vol. 19, p. 286, 1905.

The celestite here has evidently been leached out from the surrounding rocks and redeposited in the cavities. Although strontium sulphate is much less soluble than gypsum, it is more soluble than calcium carbonate, and therefore it may be dissolved away from the latter. In Transylvania, according to A. Koch,[a] celestite and barite occur together in bituminous limestone. H. Bauerman and C. Le Neve Foster [b] report celestite in a nummulitic limestone in Egypt, and the crystals sometimes inclose fossil remains. It also appears as filling the interior of fossil shells, especially the chambers of nautili. At Condorcet, in France, as described by Lachat, celestite is found associated with gypsum in limestone.[c] Examples of this kind might be multiplied almost indefinitely. Strontium and calcium are so nearly related chemically that their common association in rocks is something to be naturally expected.

BARITE.

Barite, the barium sulphate, $BaSO_4$, is closely akin mineralogically to celestite, but is more characteristically found in metalliferous veins than in bedded formations.[d] Its occurrence as a cement in sandstones has already been noticed,[e] and it has also been observed as a sintery or even stalactitic deposit from spring and mine waters.[f] P. P. Bedson [g] found barium to be present in notable amounts in an English colliery water; and T. Richardson [h] has described a deposit of barite from a similar solution. Like deposits from other English collieries have been reported by F. Clowes,[i] who analyzed samples containing from 81.37 to 93.35 per cent of $BaSO_4$. The pipes carrying water from the mines which yielded these sediments were often choked by them, the barium sulphate being rarely absent and frequently their chief constituent. At Doughty Springs, in Delta County, Colorado, according to W. P. Headden,[j] large masses of sinter have formed, consisting at some points of nearly pure barium sulphate, which at other points is mixed with minor to dominant quantities of calcium carbonate. Barytic sinters are also formed by a brine spring in a mine at Lautenthal, in the Hartz Mountains, and these have been carefully studied by G. Lattermann.[k] In this

[a] Min. pet. Mitth., vol. 9, p. 416, 1888.
[b] Quart. Jour. Geol. Soc., vol. 25, p. 40, 1869.
[c] Ann. mines, 7th ser., vol. 20, p. 557, 1881.
[d] See L. Dieulafait, Compt. Rend., vol. 97, p. 51, 1883.
[e] See *ante*, p. 461.
[f] For the distribution of barium in waters, etc., see R. Delkeskamp, Notizbl. Ver. Erdkunde, 4th ser., Heft 21, pp. 47–83, 1900. On the distribution of barium and strontium in sedimentary rocks, see L. Collot, Compt. Rend., vol. 141, p. 832, 1905.
[g] Jour. Soc. Chem. Ind., vol. 6, p. 712, 1887.
[h] Rept. Brit. Assoc., 1863, p. 54.
[i] Proc. Roy. Soc., vol. 46, p. 368, 1889.
[j] Proc. Colorado Sci. Soc., vol. 8, p. 1, 1905.
[k] Jahrb. K. preuss. geol. Landesanstalt, 1888, p. 259.

case they are precipitated by the mingling of the sulphate-bearing mine waters with the brine from the spring. Lattermann's analyses of the two waters, as stated by him in grams per liter, are as follows:

Analyses of spring and mine waters at Lautenthal.

	Spring.	Mine water.
$BaCl_2$	0.318	.....
$SrCl_2$	.899	.....
$CaCl_2$	10.120	1.515
$MgCl_2$	4.360	.023
NaCl	68.168	4.533
KCl	.458	.....
$MgSO_4$	.....	.652
$ZnSO_4$	.....	.015

The barytic deposits from these waters contain strontium, and appear in several forms—as stalactites, as mud, and as incrustations. Analyses of them by Fernandez and Bragard show the subjoined proportions of the two principal ingredients.[a]

Barium and strontium sulphates in deposits at Lautenthal.

	White stalactites.	Brown stalactites.	Mud.	Crusts.
$BaSO_4$	84.81	83.88	82.3	92.44
$SrSO_4$	12.04	8.64	13.4	4.32

Similar mixtures of the two sulphates intermediate between barite and celestite are well known in crystalline form, and calcium sulphate is often present also. A remarkable banded barite, from Pettis County, Missouri, described by C. Luedeking and H. A. Wheeler,[b] had the following composition:

Analysis of barite from Pettis County, Missouri.

$BaSO_4$	87.2
$SrSO_4$	10.9
$CaSO_4$	.2
$(NH_4)_2SO_4$	.2
H_2O	2.4
	100.9

The presence of an ammonium salt in such a mineral is most unusual.

Nearly or quite all of the occurrences of barite indicate that it is a mineral of aqueous origin. It may form as a direct deposit from waters, or as a precipitate when different waters commingle, or, as

[a] Complete analyses are given in the original memoir by Lattermann.

[b] Am. Jour. Sci., 3d ser., vol. 42, p. 495, 1891. The presence of ammonium salts was independently verified by tests in the laboratory of the United States Geological Survey.

C. W. Dickson [a] has shown, by a reaction between solutions of barium bicarbonate and gypsum. Barium sulphate is also produced, according to Dickson, when the bicarbonate solution is brought into contact with oxidizing pyrite; and its presence in limestones is attributed to a possible coincidence of the two reactions. The oxidizing pyrite is first instrumental in transforming calcium carbonate to sulphate, and the latter then undergoes double decomposition with the percolating barium solutions. The original source of the barium is in the feldspars and micas of the crystalline rocks, from which it is dissolved out during the ordinary process of weathering.

One very different occurrence of barite remains to be mentioned. In the Salem district of India T. H. Holland [b] found a remarkable network of veins consisting of quartz and barite, with about 70 per cent of the first mineral and 30 of the second. These veins are mostly in pyroxenic gneiss, and one cuts a dike of augite diorite, and Holland, for structural reasons, regarded the quartz-barite rock as a segregation from the original magma. This supposition, however, is chemically improbable. In a molten state quartz (or free silica) would react upon barium sulphate, to form a silicate and set sulphuric acid or sulphur dioxide free. Quartz and barite are magmatically incompatible.

FLUORITE.

Fluorite or fluor spar, calcium fluoride, CaF_2, is also a common mineral in dolomites and limestones,[c] and it is often associated with galena and zinc blende. Crystals of it are found in limestone geodes, where it has evidently been deposited from solution. In some cases it may have been formed by fluoride solutions percolating through and replacing limestone. Its commonest occurrence is as a filling of veins.[d]

---

[a] School of Mines Quart., vol. 23, p. 366, 1902.

[b] Rec. Geol. Survey, India, vol. 30, p. 236, 1897.

[c] See *ante*, p. 273, for an account of fluorite as a rock-forming mineral. Also p. 461 for fluorite as a cement in sandstones.

[d] For a description of the great fluor spar deposits in Kentucky and southern Illinois, see S. F. Emmons, Trans. Am. Inst. Min. Eng., vol. 21, p. 31, 1893; H. F. Bain, Bull. U. S. Geol. Survey No. 255, 1905; E. O. Ulrich and W. S. T. Smith, Prof. Paper U. S. Geol. Survey No. 36, 1905. On the fluor spar of San Roque, Cordoba, Argentina, see J. Valentin, Zeitschr. prakt. Geol., 1896, p. 104.

CHAPTER XIV.

METAMORPHIC ROCKS.

METAMORPHIC PROCESSES.

In its widest sense the adjective metamorphic may be applied to any rock which has undergone any sort of change. Practically, however, it is used to describe a well-defined class of rocks in which the transformation from an original form has been nearly complete. A slightly altered igneous or sedimentary rock is not commonly called metamorphic; neither is a mass of decomposition products so designated. The gneisses, the schists, quartzite, marble, and serpentine are the most familiar examples of metamorphism, and in each case an antecedent rock has been changed into a new rock by one or several among many different processes.

Some varieties of metamorphism are entirely physical or structural, and therefore will not be considered in this memoir. Metamorphoses which represent only a development of slaty or schistose structure are of this kind. In most cases, however, metamorphism is accompanied by chemical changes, which are indicated by the production of new minerals, and this sort of metamorphism concerns us now. It may be regional, when large areas are affected, or a phenomenon limited to a contact between two reacting rocks, but these distinctions are of little significance chemically. The chemical phases of the process are all that we need to consider at present.

The reactions involved in metamorphism are not difficult to classify. The following changes are probably the most important:

1. Molecular rearrangements, as in the process of uralitization, when a pyroxene rock is changed into one characterized by amphibole.

2. Metamorphism by hydration. The conversion of a peridotite or pyroxenite into serpentine is a case of this kind, although something more than simple hydration is involved in the change.

3. Metamorphism by dehydration. The change of limonite to hematite and of bauxite to emery are good examples. Alterations of this class, however, are often more profound than dehydration alone can account for, especially when they take place at high temperatures. Then the molecules of hydrous minerals may be broken down, as when serpentine breaks up into olivine and enstatite, or talc into a metasilicate and quartz.

4. Oxidations and reductions, which affect chiefly the iron oxides of the rocks. Ferrous compounds become ferric, and hematite, on the other hand, may be reduced to magnetite.

5. Changes other than hydration, produced by percolating solutions. Cementation is one process of this kind, and the change from sandstone to quartzite is a common example of it. In other cases the solutions effect chemical transformations, and develop new compounds. The dolomitization of limestone is a case in point.

6. Metamorphism by the action of gases and vapors, the so-called "mineralizing agents." This process generates new minerals within a rock, and introduces, like solutions, new constituents.

7. Metamorphism by igneous intrusions. This heading covers the changes due to the intrusion of molten matter into or between rock masses, whereby a class of "contact minerals" is formed.

Although this classification is simple, it is only superficially so. It is useful as a matter of convenience, but its application to concrete examples of metamorphism is not always easy. Two or more processes may operate simultaneously, or they may shade into one another, with all sorts of variations in detail due to variations in temperature and pressure. All of these considerations must be borne in mind in dealing with the actual phenomena of metamorphism. The ideal simplicity is not often found.

In the study of metamorphic phenomena the conceptions developed by C. R. Van Hise [a] are also helpful. Van Hise divides the lithosphere into two zones—an upper zone of katamorphism and a lower of anamorphism. The zone of katamorphism is furthermore subdivided into two belts—one the belt of weathering, the other that of cementation. These approximately concentric shells are characterized by definite chemical differences, which may be briefly summarized as follows:

The uppermost shell of all, the belt of weathering, extends from the surface of the ground to the level of the ground water, and its thickness is very variable. It is essentially the region of rock decomposition, and its reactions are mainly those of hydration, oxidation, absorption of carbonic acid with liberation of silica, and losses of material by leaching. It is also a region of low pressure, relatively low temperature, and great porosity. In it the complex silicates are broken down into simpler compounds, from which, within the belt, they are rarely regenerated.

The belt of cementation is that which contains the ground water. Its rocks are more or less porous and fractured, its temperature is still not high, but the pressure is great enough to play an important part in the reconsolidation of sedimentary material. It is, in short, the birthplace of such rocks as shales and sandstones. In the belt

[a] Treatise on metamorphism: Mon. U. S. Geol. Survey, vol. 47, 1904.

above it solution is a leading process, but here, in the accumulated ground water, redeposition rules. Hence its name, the belt of cementation.

In the zone of anamorphism, which lies below the region of the ground water, the rocks are no longer distinctly porous. The pressure above them tends to close up all pores and fractures. The temperature is also relatively high—that is, below the melting point of the rocks, but possibly above the critical temperature of water. Under these conditions the reactions of the upper zone are reversed. Instead of hydration, there is dehydration; reduction is more common than oxidation; carbonates are decomposed and silicates are regenerated. Pneumatolytic reactions are characteristic of this region, and so too are metasomatic changes. There is also a tendency to the development, under pressure, of the heavier and denser rock-forming minerals and of the species which contain constitutional water, fluorine, or boric oxide. Garnet, staurolite, muscovite, epidote, and tourmaline are, for examples, typical minerals of the metamorphic rocks.

According to C. R. Van Hise, the minerals of the upper zone are those which are formed with increase of volume and evolution of heat. In the lower zone, contraction and absorption of heat occur. These distinctions, of course, are general, not absolute, and should only be accepted in a broad way. They stand for prevailing tendencies, to which many exceptions are possible. Nor can the belts and zones be rigorously delimited, for they shade into and even interpenetrate one another. Material formed in the belt of weathering is covered up by sediments, and presently finds itself within the belt of cementation. Still later, covered more deeply, it may pass into the zone of anamorphism. So also, by erosion, a part of the anamorphic zone may be uncovered and brought within the realm of weathering. To all of these changes chemical changes correspond, so that the same mass of material can be metamorphosed, in opposite directions, over and over again. A clay becomes a shale; that is transformed into a schist or gneiss, and that again may pass back into clay. The phenomena of decomposition, of reconsolidation, and of recrystallization form parts of a cycle of changes which are recognized mainly by their interruptions. The definite products to which we give definite names represent temporary stoppages or periods of slow change in the progress of the cycle.

In both zones of the lithosphere water is the chief agent of chemical metamorphism. It is most abundant in the zone of katamorphism, where it acts mainly as a liquid and fills more or less completely the pore spaces of the rocks. In the zone of anamorphism water is much less abundant and operates in the subcapillary and intermolecular spaces, where, because of the higher temperatures, it

is probably present, at least for the most part, as vapor. At a depth of about 10 kilometers the critical temperature of water is likely to be reached, and its chemical activity should then be very high. The well-known corrosive action of superheated steam upon glass is an illustration of this point. Even when the water is still liquid, at temperatures of over 200°, it may form a fluid or pasty mass with some silicates, as was shown by C. Barus[a] in his experiments upon aqueo-igneous fusion.

In the zone of katamorphism the water is moving freely, percolating from place to place. In the lower zone its mobility must be much diminished, so that on a given particle of rock it acts for a longer time. It may appear in this zone, according to Van Hise, in three ways—as water held by buried sedimentaries, as water liberated from hydrous compounds by heat or pressure, and as magmatic water contained in igneous intrusions. But from whatever source it may be derived, its chemical functions are the same. It acts as a solvent upon practically all the rock-forming minerals; it therefore transfers matter slowly from point to point and in that way assists in bringing about recrystallization. In so doing the water is partly taken up into the molecules of new compounds, such as staurolite, epidote, mica, and tourmaline, of which it forms a constitutional part and from which it can only be expelled at temperatures approaching or even exceeding a red heat. Loosely combined water thus becomes firmly combined water and ceases for the time being to be further active. A reference back to the chapter upon rock-forming minerals will show how many syntheses have depended upon heating the constituent substances with water under pressure. The minerals thus formed are characteristic of the zone of anamorphism, even though they are not confined to it.

The sediments, as a rule, contain organic matter. When they reach, by burial, the high temperatures of this zone, the organic matter is decomposed, yielding free carbon, carbon dioxide, nitrogen, and water. The free carbon may appear in the metamorphosed rocks as amorphous particles or it may be recrystallized into graphite; the carbon dioxide may escape, working its way slowly upward, or it may be caught and inclosed within crystals of quartz or other minerals. Inclusions of this kind are common, and so also are inclusions of free carbon.

In this process of decomposition the organic matter of the sediments acts as a reducing agent, transforming ferric to ferrous compounds. When magnetite is thus formed from limonite, the reduction is partial, but when the iron compounds of a clay are metamorphosed into staurolite or tourmaline, the change from ferric to ferrous is nearly or quite complete. It must not be assumed, however,

[a] See ante, p. 244.

that organic matter is the only reducing agent during metamorphism. We have seen in a previous chapter that hydrogen may be either occluded in or generated from heated rocks,[a] and its activity as a reducer may be very great. But on this point, geologically speaking, there is little positive knowledge. We are compelled to deal, more or less, with reasonable inferences.

By the action of the heated waters much silica is liberated, which recrystallizes in part as quartz. Some of it, however, attacks the limestones of the buried sedimentaries, liberating carbon dioxide and forming silicates, such as wollastonite. When, however, a large mass of fairly pure limestone or dolomite reaches the anamorphic zone, it is recrystallized into marble. This change, and also the formation of dolomite, was considered in detail in the preceding chapter, where the subject was perhaps out of place. Some of the concomitant changes will be discussed later.

One great distinction between the two zones remains to be noted. In the belt of weathering the transfer of material from point to point. both by mechanical and by chemical means, is a conspicuous feature. In the belt of cementation the mechanical transfers become less prominent, but the moving waters carry much matter long distances in solution. In the zone of anamorphism the mechanical movements become relatively insignificant and the chemical changes are practically effected in place—that is, the chemical movements of matter within the lower zone are only through trifling distances, and the transformations are effected with material close at hand. The upper zone is, then, emphatically a zone of mobility; while the material of the lower zone, being under great pressure, is comparatively immovable. I speak now, of course, of certain kinds of movement; the motions of the earth's crust, its upheavals and depressions, the displacing influence of igneous intrusions, etc., are phenomena of a different order. Neither do I use the terms movable and immovable in any absolute sense, for they have only a relative meaning. The freedom of motion in the upper zone is vastly greater than in the lower; and because of that fact the phenomena of the two zones become strongly contrasted.

CLASSIFICATION.

The classification of the metamorphic rocks is not a simple matter. The criterion of structure is not sufficiently general, and that of genesis is too vague. We can not always determine the genesis of a given rock, and when we are able to do so, the result, for purposes of classification, may be unsatisfactory. A gneiss can be derived from an igneous rock or from one of sedimentary origin, the product being sensibly the same in both cases. It is possible, of course, to

[a] See *ante*, pp. 224–232, for the experiments of Tilden, Travers, Gautier, etc.

classify these rocks on the basis of their composition; but here again there are difficulties, even greater, perhaps, than those which becloud the classification of purely igneous material.[a] Quite dissimilar rocks may have very similar composition. In fact, no single classification covers all the ground; for the phenomena of nature do not arrange themselves in linear sequence. They form an irregular network of interlacing lines, with all manner of intersections and frequent disturbances.

Taking all of the difficulties into account, I prefer to study the metamorphic rocks, so far as may be practicable, with reference to the chemical processes which have governed their formation. I have already stated that several processes may take part in a single metamorphosis; but in many cases one process predominates. The conspicuous process, then, gives a basis for classifying our data, which need not, however, exclude other arrangements for other purposes. The method supplements, but does not supplant its rivals. For convenience we may also divide the metamorphic rocks into three classes, as follows: First, those derived from igneous rocks; second, those of sedimentary origin; third, rocks formed by contact reactions between the igneous and the sedimentary.

The metamorphism of the igneous rocks is commonly a deep-seated phenomenon; that is, its conspicuous examples are formed in the zone of anamorphism, or under anamorphic conditions. Leaving mechanical or structural changes out of consideration, its conspicuous feature is of the order of a molecular rearrangement; in other words, the older minerals are transformed into new species, sometimes by simple paramorphism and sometimes with transfer of material from one molecule to another. In general, as F. Becke[b] has shown, the rearrangements are attended by decrease of volume, the product of the change being denser than the original material. For example, in the special case chosen by Becke, the plagioclase and orthoclase of a rock containing a little water were transformed into a mixture of albite, zoisite, muscovite, and quartz, the volume reduction being in the ratio of 547.1: 462.5, a loss of over 15 per cent. A number of similar condensations are cited by U. Grubenmann;[c] and although the calculations are necessarily crude, they are none

[a] U. Grubenmann (Die Kristallinen Schiefer, Berlin, vol. 1, 1904; vol. 2, 1907) has attempted to form a chemical classification of the schists, which resembles Osann's discussion of the igneous rocks.

[b] Neues Jahrb., 1896, pt. 2, p. 182.

[c] Die Kristallinen Schiefer, pp. 34–38, Berlin, 1904. Grubenmann's data are taken from a paper by F. Becke, in Compt. Rend. IX Cong. géol. internat., p. 553, 1903. See also F. Loewinson-Lessing, Studien über die Eruptivgesteine: Compt. Rend. VII Cong. géol. internat., St. Petersburg, 1897.

the less conclusive.[a] The fact that there are exceptions to the rule does not destroy its general validity.

From a mineralogical point of view, the more noteworthy metamorphoses within the igneous rocks may be classified under the following headings:

1. Change of pyroxene to amphibole.
2. Change of feldspar to mica.
3. Change of feldspar to zoisite.
4. Change of feldspar to scapolite.
5. Formation of epidote.
6. Formation of garnet.
7. Change of hornblende to chlorite.
8. Segregation of albite from plagioclase.
9. Formation of serpentine.
10. Alteration of ilmenite.

This schedule is by no means exhaustive, for many other minor changes are to be observed in the metamorphism of igneous rocks. Every primary mineral that they contain may give rise to secondary species, and these represent all orders of transformation from the slightest modification to the complete molecular breaking down which is seen in the processes of weathering. Decompositions, however, are not now under discussion; we are dealing with the phenomena of recrystallization within rock masses, excepting, of course, the case of serpentinization, which is a process of a different order.

URALITIZATION.

The alteration of pyroxene rocks into hornblende rocks is one of the best-established metamorphoses. The hornblende thus produced, when fibrous, is known as uralite, and the change is called uralitization.[b] It is often accompanied and complicated by other changes, such as the formation of epidote or zoisite, and it may also be coincident with the development of a schistose structure. Mediosilicic and subsilicic rocks, like gabbro and diabase, are thus metamorphosed into amphibolite or hornblende schist. An excellent example of this sort of change was found by J. J. H. Teall[c] in a dike at Scourie, Sutherlandshire, Scotland, where a dolerite had changed, first into a massive hornblende-bearing rock and later into a schist. The following

[a] For a tabulation of the volume changes attending the alteration of minerals, see C. R. Van Hise, Treatise on metamorphism: Mon. U. S. Geol. Survey, vol. 47, pp. 397–408, 1904.

[b] See G. H. Williams, Bull. U. S. Geol. Survey No. 62, p. 52, 1890, for a full discussion of this subject, accompanied by abundant references to literature. See also L. Duparc and T. Hornung, Compt. Rend., vol. 139, p. 223, 1904, on a theory of uralitization.

[c] British Petrography, p. 198, 1888; also in Quart. Jour. Geol. Soc., vol. 41, p. 137, 1885.

ever, do not concern the chemist. From a chemical point of view it is immaterial whether the sand grains are coarse or fine, rounded or angular. Such rocks as conglomerates, breccias, arkoses, graywackes, etc., have no distinct chemical peculiarities; they are made up of detrital material, and vary from their parent formations only in the extent to which their component fragments have been decomposed and in the nature of their cementing substances. Any sand or detritus may be reconsolidated by any one of the cements above mentioned. When a mixture of sand and clay consolidates, it may form an argillaceous sandstone or a sandy shale, according to the relative proportions of the two ingredients. In such a sandstone the colloidal substances of the admixed clay appear to act as binders, their function being somewhat different from that of the cements deposited by solutions. Their binding power is probably, in most cases, reinforced by the addition of true cements, usually either calcium carbonate or silica. By secondary reactions, due to additions of this kind, the clay substances may be transformed into other things, as shown in the graywacke of Hurley, Wisconsin.[a] This is a detrital rock, which originally consisted largely of quartz and feldspar, with a little hornblende, and dark fragments of older rock material, held together by clay. In the graywacke the clay has been transformed into what is principally a chlorite, with secondary quartz and some other minor minerals. The cement, which was at first amorphous, is now entirely crystalline. Metasomatic changes of this order are very common, and the reactions which can occur are many. With different detritus, different cements, and different salts in the circulating waters, a vast number of transformations are possible. On this subject it would be difficult to generalize.

In a microscopic study of about 150 psammites, as rocks of the sandstone class are sometimes called, G. Klemm[b] identified the following substances among their components: Quartz, feldspars, micas, iron ores, zircon, rutile, apatite, tourmaline, garnet, titanite, augite, hornblende, opaline silica, glauconite, carbonates of calcium, magnesium and iron, rock fragments, clastic dust, and clay. Even this list is probably far from being exhaustive. An arkose sandstone from the quicksilver region of California, made up of granitic detritus, was found by G. F. Becker[c] to contain quartz, orthoclase, oligoclase, biotite, muscovite, hornblende, titanite, rutile, tourmaline, and apatite. In short, all of the rock-forming minerals which can in any way

[a] Described by W. S. Bayley in Bull. U. S. Geol. Survey No. 150, p. 84, 1898. Compare C. R. Van Hise, Am. Jour. Sci., 3d ser., vol. 31, p. 453, 1886, for data concerning other similar rocks in the same region.

[b] Zeitschr. Deutsch. geol. Gesell., vol. 34, p. 771, 1882.

[c] Mon. U. S. Geol. Survey, vol. 13, p. 59, 1888. Several other sandstones are described by J. S. Diller in Bull. U. S. Geol. Survey No. 150, pp. 72–84, 1898.

survive the destruction of a rock may be found in its sands, and therefore in the sandstones. The feldspars and ferromagnesian minerals, however, are quite commonly altered or even removed, the more stable minerals, like quartz, being much more persistent. Quartz is the most abundant mineral in these rocks, while in rocks of the crystalline and eruptive classes it is subordinate to the feldspars.

The following analyses, which, with one exception, were all made in the laboratory of the United States Geological Survey, will suffice to show the general composition of the sandstones:[a]

Analyses of sandstones.

A. Potsdam sandstone, Ablemans, Wisconsin. Analysis by E. A. Schneider. Described by J. S. Diller, Bull. U. S. Geol. Survey No. 150, p. 80, 1898. Nearly pure quartz.

B. Brown sandstone, Hummelstown, Pennsylvania. Analysis by Schneider. Described by Diller, op. cit., p. 77. Composed chiefly of quartz, with some feldspar, kaolin, etc. The cement is iron oxide.

C. Ferruginous sandstone, "carstone," from Hunstanton, Norfolk, England. Analysis and description by J. A. Phillips, Quart. Jour. Geol. Soc., vol. 37, p. 6, 1881. Consists of quartz grains cemented by brown iron ore, with very little feldspar and mica. Phillips also gives five other analyses of British sandstones.

D. From a "sandstone dike" in Shasta County, California. Analysis by T. M. Chatard. Described by J. S. Diller, Bull. Geol. Soc. America, vol. 1, p. 411, 1889. Made up of quartz, feldspar, and biotite, with a calcite cement. Contains also serpentine, titanite, magnetite, and zircon.[b]

E. Miocene sandstone, Mount Diablo, California. Analyzed and described by W. H. Melville, Bull. Geol. Soc. America, vol. 2, p. 403, 1890.

F. Composite analysis of 253 sandstones. By H. N. Stokes.

G. Composite analysis of 371 sandstones used for building purposes. By H. N. Stokes.

H. Graywacke, Hurley, Wisconsin. Analysis by H. N. Stokes. Described by W. S. Bayley, Bull. U. S. Geol. Survey No. 150, p. 84, 1898. Contains quartz, feldspars, iron oxides, and probably kaolin. In the cement are chlorite, quartz, magnetite, pyrite, rutile, sometimes biotite, and either muscovite or kaolin.

	A.	B.	C.	D.	E.	F.	G.	H.
SiO_2	99.42	88.13	49.81	48.13	44.54	78.66	84.86	76.84
TiO_2	.....	.....	.....	.24	.....	.25	.41	.....
Al_2O_3	.31	5.81	5.17	11.19	12.63	4.78	5.96	11.76
Fe_2O_3		1.77	29.17	1.25	2.50	1.08	1.39	.55
FeO	.....	.31	.35	1.47	3.08	.30	.84	2.88
MnO	.....	.....	.....	.29	.44	trace	trace	trace
CaO	.....	.20	2.43	16.39	14.65	5.52	1.05	.70
SrO	.....	.....	.....	.....	.....	trace	none	.....
BaO	.....	.....	.....	.04	.....	.05	.01	.....
MgO	.....	.53	.95	2.22	5.55	1.17	.52	1.39
Na_2O	.....	.06	.84	2.29	3.35	.45	.76	2.57
K_2O	.....	2.63	.48	1.17	1.37	1.32	1.16	1.62
Li_2O	.....	.....	.....	.....	.....	trace	trace	.....
H_2O-	.18	.23	3.85	.78	1.43	.31	.27	1.87
H_2O+		.26	6.56	1.78	2.25	[c] 1.33	[c] 1.47	
P_2O_5	.....	.....	.42	.14	.29	.08	.06	.....
CO_2	.....	.....	.....	12.73	7.76	5.04	1.01	.....
SO_3	.....	.....	.....	.....	.....	.07	.09	.....
Cl	.....	.....	.....	.....	.....	trace	trace	.....
	99.91	99.93	100.03	100.11	99.84	100.41	99.86	100.18

[a] For additional analyses, see Bull. U. S. Geol. Survey No. 228, pp. 291–296, 1904. W. Wallace (Proc. Phil. Soc. Glasgow, vol. 14, p. 22, 1883) and W. Mackie (Trans. Edinburgh Geol. Soc., vol. 8, pp. 58, 59, 1899) give a number of good analyses of Scottish sandstones. See also C. C. Moore, Proc. Liverpool Geol. Soc., vol. 8, p. 241, 1898, for English examples.

[b] Other "sandstone dikes" near Pikes Peak, Colorado, have been described by W. Cross. They probably represent quicksands which were injected into fissures.

[c] Includes organic matter.

A peculiar rock, which is sometimes called a calcareous sandstone, is the *gaize* of the French geologists. It has been fully described by L. Cayeux [a] as a siliceous rock, rich in the débris of siliceous organisms, containing quartz and glauconite cemented by opal and clay, with sometimes chalcedony, and very little carbonate of lime. The silica in gaize ranges from 76 to 92 per cent, and a large part of it, 75.3 per cent in the maximum, is soluble in caustic alkalies. It is, as defined by Cayeux, a sedimentary rock consisting largely of non-clastic silica, and seems to have been originally a marine ooze.

FLINT AND CHERT.

It is at once evident that a considerable variety of rocks may be formed from siliceous oozes, such as the radiolarian and diatomaceous oozes of the *Challenger* expedition. These fine sediments may be mixed with more or less clay, sand, or calcareous matter, shading, when consolidated, into shales, sandstones, or siliceous limestones. Their geological relations and their content of amorphous or opaline silica must be depended upon to define them. In the same category we must place infusorial earth, which consists mainly of the siliceous remains of diatoms; and such rocks as flint, chert, and novaculite fall in some cases, if not always, under this general classification. With some exceptions these rocks are commonly of organic origin. The novaculite of Arkansas, however, has been differently interpreted.[b] It is regarded by L. S. Griswold as a siliceous sediment or silt; in other words, as sandstone of extremely fine grain. No organisms could be positively detected in it, nor does it contain any appreciable amount of soluble silica. It is, according to Griswold, essentially a shale minus the argillaceous component, and it forms part of a sedimentary series in which all gradations from shale to novaculite occur. F. Rutley,[c] however, dissents from Griswold's views, and has sought to show that the novaculite is a siliceous replacement or pseudomorph after limestone or dolomite. It has also been regarded as a chemical precipitate, analogous to siliceous sinter. In composition the novaculite is very nearly pure silica.

The much commoner variety of compact silica known as chert has also been diversely interpreted. A number of writers,[d] studying chert from different localities, have argued in favor of the replacement

---

[a] Mém. Soc. géol. du Nord, vol. 4, pt. 2, 1897. Several incomplete analyses of gaize are given. The determination of amorphous silica by its solubility in caustic alkalies, it must be observed, is not very accurate. Silica in any form will dissolve, the rate of solution depending upon the fineness of its subdivision, and the concentration of the alkali. Opaline silica, however, dissolves rapidly in weak alkali, and so can be roughly estimated. Quartz dissolves very slowly.

[b] See Griswold's monograph on this rock (Rept. Arkansas Geol. Survey, 1890, vol. 3) and a paper by the same author in Proc. Boston Soc. Nat. Hist., vol. 26, p. 414, 1894. Compare also O. A. Derby, Jour. Geol., vol. 6, p. 366, 1898; and J. C. Branner, idem, p. 368. Branner sums up very concisely the different theories which have been advanced to account for rocks of this character.

[c] Quart. Jour. Geol. Soc., vol. 50, p. 380, 1894.

[d] E. Hull and E. T. Hardman, Sci. Trans. Roy. Dublin Soc., new ser., vol. 1, pp. 71, 85, 1878, on the Carboniferous cherts of Ireland; A. Renard, Bull. Acad. Belg., vol. 46, p. 471, 1878, on the phthanites of Belgium; T. Rupert Jones, Proc. Geol. Assoc. London, vol. 4, p. 439, 1876; and others.

theory. That the replacement of calcium carbonate by silica is possible, no one can deny, for silicified shells and corals are common. The pseudomorphs of chalcedony or opal after coral, from Tampa Bay, Florida, are conspicuous examples of this change. Furthermore, A. H. Church[a] has effected the transformation artificially. A piece of recent coral was almost completely silicified, losing nearly all its carbonate of lime, when an aqueous solution of silica was allowed to filter through it very gradually. Some chert, then, may have been formed in this way.

On the other hand, chert and flint often exhibit evidences of organic derivation. The radiolarian cherts of California, described by A. C. Lawson, C. Palache, and F. L. Ransome,[b] are principally composed of radiolarian remains. Lawson regards these cherts as having been formed by precipitations of colloidal silica from submarine springs, which produced a sort of ooze in which the radiolaria became embedded. In other cases cherts were probably derived from sponges, whose spicules consist very largely of opaline silica.[c] Cherts crowded with these spicules have been described by various authors, especially by W. J. Sollas[d] and G. J. Hinde.[e] Hinde studied especially the cherts of the Greensand formation in southern England, the cherts of Spitzbergen, and also the Irish cherts, described by Hull and Hardman. In all of them the sponge spicules were abundant. The same thing is true of the flint nodules found in chalk, which almost invariably show signs of a similar origin.[f] In order to account for these nodules, Sollas suggests that sponge spicules accumulated in a calcareous ooze, where, in presence of sea water under pressure, they partly dissolved. The silica thus taken into solution was later reprecipitated around suitable nuclei, at the same time replacing carbonate of lime. It is possible, however, as A. A. Julien[g] has shown, that the organic matter of the decaying sponges may have exerted much influence in bringing about the solution of silica. It is difficult to see how the nodules could have developed except from silica which had been first dissolved. Their growth around organic nuclei can hardly be explained otherwise.

Sedimentary rocks consisting almost entirely of silica may originate in divers ways. As siliceous sinter[h] the silica is simply a

[a] Jour. Chem. Soc., vol. 15, p. 107, 1862.

[b] Lawson, Fifteenth Ann. Rept. U. S. Geol. Survey, p. 420, 1895; Lawson and Palache, Bull. Dept. Geology, Univ. California, vol. 2, pp. 354, 365, 1902; Ransome, idem, vol. 1, p. 193, 1894.

[c] See Thoulet, Bull. Soc. min., vol. 7, p. 147, 1884.

[d] Ann. and Mag. Nat. Hist., 5th ser., vol. 6, pp. 384, 437, 1880; vol. 7, p. 141, 1881.

[e] Phil. Trans., vol. 176, p. 403; 1885; Geol. Mag., 1887, p. 435; idem. 1888, p. 241.

[f] See Hinde and Sollas, loc. cit., and G. C. Wallich, Quart. Jour. Geol. Soc., vol. 36, p. 68, 1880. J. A. Merrill (Bull. Mus. Comp. Zool., vol. 28, p. 1, 1895) has described fossil sponges from flints found in the Cretaceous near Austin, Texas.

[g] Proc. Am. Assoc. Adv. Sci., 1879, p. 396.

[h] See *ante*, p. 161.

deposit from hot springs. As sandstone it is an aggregate of finely divided quartz. In gaize and some cherts the rock is composed in great part of organic remains. In some cases calcium carbonate has been obviously replaced by silica. There are also siliceous concretions, like flints, as well as the oolites which are formed by the deposition of silica from solution around quartz grains. Such an oolite from Pennsylvania has been studied by several investigators.[a] It is possible that a single formation may represent more than one of these processes. R. D. Irving and C. R. Van Hise,[b] for example, describing the chert of the Penokee iron region, which was laid down simultaneously with the iron carbonates, suggest that it may have been partly derived from organic remains and also be partly a chemical sediment. In short, no one process can account for all the occurrences of amorphous or cryptocrystalline silica, and each locality must be studied in the light of its own evidence.

The following analyses of chert, novaculite, etc., will serve to illustrate the chemical uniformity of these rocks:[c]

Analyses of chert and allied rocks.

A. Novaculite, Rockport, Arkansas. Analysis by R. N. Brackett. From Griswold's monograph, p. 161.

B. Chert, Belleville, Missouri. Analysis by E. A. Schneider, Bull. U. S. Geol. Survey No. 228, p. 297, 1904. Other analyses are given on the same page.

C. Chert from the Upper Carboniferous of Ireland.[d] Analysis by E. T. Hardman, Sci. Trans. Roy. Dublin Soc., new ser., vol. 1, p. 85, 1878.

D. Siliceous oolite, Center County, Pennsylvania. Analysis by Bergt, Abhandl. Gesell. Isis, 1892, p. 115.

E. Infusorial earth, Nevada. Analysis by R. W. Woodward, Rept. U. S. Geol. Explor. 40th Par., vol. 2, p. 768, 1877.

	A.	B.	C.	D.	E.
SiO_2	99.47	98.17	95.50	98.72	86.70
Al_2O_3	.17	.83	.10	.54	4.09
Fe_2O_3	.12		1.95		.....
FeO	.....	.....	.15	.....	1.26
CaO	.09	.05	.....	.09	.14
$CaCO_3$	.....	.....	.87	.....	.....
$CaSO_4$	.....	.....	trace	.....	.....
MgO	.05	.01	trace	.....	.51
K_2O	.07	.....	.....	.26	.41
Na_2O	.15	.....	trace		.77
P_2O_5	.....	.....	.....	.....	trace
Ignition	.12	.78	1.43	.34	5.99
	100.24	99.84	100.00	99.95	99.87

[a] E. H. Barbour and J. Torrey, Am. Jour. Sci., 3d ser., vol. 40, p. 246, 1890; E. O. Hovey, Bull. Geol. Soc. America, vol. 5, p. 627, 1893; and Bergt, Abhandl. Gesell. Isis, 1892, p. 115. See also G. R. Wieland, Am. Jour. Sci., 4th ser., vol. 4, p. 262, 1897, who ascribes these oolites to the agency of hot springs.

[b] Tenth Ann. Rept. U. S. Geol. Survey, pt. 1, p. 397, 1890. See also C. R. Van Hise, Treatise on metamorphism: Mon. U. S. Geol. Survey, vol. 47, pp. 847–853, 1904.

[c] For other analyses see Griswold's monograph on novaculite, Hardman's paper on the Irish cherts, Barbour and Torrey on the oolite, and Hovey, Am. Jour. Sci., 3d ser., vol. 48, p. 401, 1894, on cherts from Missouri. In a large number of cherts from Kentucky, J. H. Kastle, J. C. W. Frazer, and G. Sullivan (Am. Chem. Jour., vol. 20, p. 153, 1898) found appreciable amounts of phosphates ranging from 0.18 up to 3.5 per cent of P_2O_5.

[d] Some of the Irish cherts are highly calcareous, representing transitions to siliceous limestone.

Other analyses, in considerable number, show intermediate gradations between chert and limestone. These represent comminglings in any proportion between the cherty silica and calcium carbonate, That is, silica and calcium carbonate may be deposited together in the same mud or ooze, forming a nearly homogeneous mixture.

SHALE AND SLATE.

When the finest products of sedimentation consolidate, they tend to form a close-grained, laminated, or fissile rock, which is called shale. As thus used, the term is very vague and has little chemical significance. Sand, reduced to the fineness of flour, may form a rock which is shaly in structure, and so too may limestone. In these cases, however, there is commonly more or less argillaceous impurity in the rocks, so that it is better to call them argillaceous sandstones or limestones.

As the term is generally used, a shale is supposed to be a consolidated mud or clay in which the aluminous silicates are the more important and characteristic constituents. Shales, therefore, vary in composition exactly as do the materials from which they form, and may contain sandy or calcareous impurities. Bituminous and carbonaceous shales are also common. Many shales contain pyrite or marcasite, which oxidize and give rise to the formation of sulphates. These rocks are called alum shales and exhibit aluminous efflorescences. The alum shales and calcareous shales are easily alterable; those which consist chiefly of aluminous silicates, having been formed from the final products of rock decomposition, are remarkably stable. Their disintegration, when it occurs, is largely a mechanical process and involves very little chemical change.

Between typical sandstones and typical shales there are pronounced structural differences. A sandstone is made up of grains which are discernible to the eye, and is therefore distinctly porous. In consequence of this peculiarity it is easily permeable to percolating waters, the source from which its cementing substances are derived. A shale, on the other hand, consists of much finer particles, which are closely packed, and its porosity is small.[a] In its formation the cementing process is less prominent than in the case of sandstone, and its consolidation seems to have been effected by a sort of welding. The colloidal matter contained in most muds and clays is capable of binding under the influence of pressure alone; and to unions of this kind a shale mainly owes its coherence. Cementation is not excluded, but it has become a subordinate factor. Under the influence of pressure, the water of a mud is largely expelled, so that the resulting shale is much less hydrous.

[a] For data on the fineness of sand and mud particles, see C. R. Van Hise, Treatise on metamorphism: Mon. U. S. Geol. Survey, vol. 47, p. 892, 1904.

The following analyses of shales were all made in the laboratory of the United States Geological Survey. Some constituents, reported in "traces" only, are omitted from the table. A number of other analyses are given in Bulletin No. 228, pages 337–350.

Analyses of shales.

A. A composite analysis of fifty-one Paleozoic shales, by H. N. Stokes.

B. Composite analysis of twenty-seven Mesozoic and Cenozoic shales, by H. N. Stokes.

C. Black Devonian shale, near Longfellow mine, Morenci district, Arizona. Analyzed by W. F. Hillebrand.

D. Middle Cambrian shale, Coosa Valley, Alabama. Analysis by Stokes.

E. Bituminous shale, Dry Gap, Georgia. Analysis by L. G. Eakins.

F. Shale, near Rush Creek, Pueblo quadrangle, Colorado. Analysis by George Steiger.

G. Carboniferous shale, Elliott County, Kentucky. Analysis by T. M. Chatard.

H. Cretaceous shale, Mount Diablo, California. Highly calcareous. Analysis by W. H. Melville.

	A.	B.	C.	D.	E.	F.	G.	H.
SiO_2	60.15	55.43	61.25	55.02	51.03	45.89	41.32	25.05
TiO_2	.76	.46	.66	.65	.....	.52	.48	.....
Al_2O_3	16.45	13.84	15.60	21.02	13.47	13.24	20.71	8.28
Fe_2O_3	4.04	4.00	1.35	5.00	8.06	3.88	2.59	.27
FeO	2.90	1.74	3.04	1.54	.....	.....	5.46	2.41
MnO	trace	trace	.07	trace	.....	.....	.17	4.11
ZnO	.....	.....	.03	.....	.....	.....	.....	.....
CaO	1.41	5.96	3.40	1.60	.78	12.09	9.91	27.87
BaO	.04	.06	trace	.04	.....	.....	.....	.....
MgO	2.32	2.67	4.16	2.32	1.15	2.12	1.91	2.61
Na_2O	1.01	1.80	.44	.81	.41	.47	7.19	.....
K_2O	3.60	2.67	6.74	3.19	3.16	2.31	.88	.....
Li_2O	trace	trace	trace	.03	.....	.....	.....	.....
H_2O-	.89	2.11	.62	2.44	} .81	1.38	.....	1.44
H_2O+	3.82	3.45	2.09	5.65		4.16	8.78	2.86
P_2O_5	.15	.20	.08	.06	.31	.17	.08	.08
CO_2	1.46	4.62	.....	.83	.....	10.38	.55	24.20
SO_3	.58	.78	.....	.02	.....	.....	.....	.....
S	.....	.....	.....	.....	7.29	.....	.....	.....
C	.88	.69	.....	[a].32	13.11	.....	.....	.....
Hydrocarbons	.....	.....	.....	.....	3.32	.....	.....	.....
Organic matter	.....	.....	.....	.....	.....	3.47	.....	.....
Pyrite	.....	.....	.25	.....	.....	.....	.....	.....
Chalcopyrite	.....	.....	.03	.....	.....	.....	.....	.....
	100.46	100.48	99.81	100.54	[b]102.90	100.08	100.03	99.18

[a] Carbonaceous matter. [b] Less O=S, 100.17.

The most noticeable feature in these analyses, as compared with analyses of similar clays, is the change in the iron oxides. In the shales the proportion of ferrous relatively to ferric oxide has increased; probably because of the reducing action of organic matter in the sediments as they were first laid down. Ferric oxide has been evidently reduced, and organic substances furnish the most obvious reagent for producing such an alteration.

Under the long-continued influence of pressure the shales become more compact and less hydrous, and pass into the rocks known as clay slates. By further change, of a metasomatic character, the slates are transformed into the metamorphic mica schists, in which various new minerals appear. The schists will be considered in the next chapter. Even in the slates the effects of metasomatism are manifest, for micas and chlorites appear conspicuously in them. These minerals have been formed at the expense of the clay silicates and the residual feldspars. Scales of detrital mica are, of course,

common in the sediments; but in the slates the feldspar grains have been more or less transformed into particles made up of interlocking quartz and mica; the latter usually appearing in the fibrous sericitic form. Even in Carboniferous clays and shales W. M. Hutchins[a] found little kaolin, but more or less secondary quartz, chlorite, and mica. The chlorites, evidently, were derived from the débris of ferromagnesian minerals.

The mineralogical composition of the clay slates has been studied by several investigators,[b] and the results are thoroughly summed up by Dale in his memoir upon the slate belt of eastern New York and western Vermont. In these rocks he observed clastic particles of quartz, feldspar, zircon, muscovite, and carbonaceous matter; and autogenous quartz, chlorite, muscovite, pyrite, and carbonates of lime, magnesia, iron, and manganese. Rutile, hematite, and tourmaline were also noted. The pyrite was often altered to limonite. Other observers, studying other slates, have found ottrelite, staurolite, garnet, biotite, hornblende, epidote, apatite, pyrrhotite, gypsum, and magnetite in them.

The subjoined analyses of roofing slates were all made by W. F. Hillebrand in the laboratory of the United States Geological Survey:[c]

Analyses of roofing slates.

A. Sea-green slate, Pawlet, Vermont. B. Purple slate Castleton, Vermont. C. Black slate, Benson, Vermont. D. Red slate, near Hampton Village, New York. E. Green slate, near Janesville, New York. F. Black slate, Slatington, Pennsylvania.

	A.	B.	C.	D.	E.	F.
SiO_2	67.76	60.96	59.70	67.61	56.49	56.38
Al_2O_3	14.12	16.15	16.98	13.20	11.59	15.27
Fe_2O_3	.81	5.16	.52	5.36	3.48	1.67
FeO	4.71	2.54	4.88	1.20	1.42	3.23
MgO	2.38	3.06	3.23	3.20	6.43	2.84
CaO	.63	.71	1.27	.11	5.11	4.23
Na_2O	1.39	1.50	1.35	.67	.52	1.30
K_2O	3.52	5.01	3.77	4.45	3.77	3.51
H_2O-	.23	.17	.30	.45	.37	.77
H_2O+	2.98	3.08	3.82	2.97	2.82	4.09
TiO_2	.71	.86	.79	.56	.48	.78
CO_2	.40	.68	1.40	none	7.42	3.67
P_2O_5	.07	.23	.16	.05	.09	.17
MnO	.10	.07	.16	.10	.30	.09
BaO	.04	.04	.08	.04	.06	.08
FeS_2	.22	none	1.18	.03	.03	1.72
NH_3	.....	.01	.....	.....	.....	.....
C	none	.....	.46	.....	.....	.59
	100.07	100.23	100.05	100.00	100.38	100.39

[a] Geol. Mag., 1894, pp. 36, 64; idem, 1896, pp. 309, 343.

[b] See especially W. M. Hutchins, loc. cit.; H. C. Sorby, Quart. Jour. Geol. Soc., vol. 36, Proc., pp. 66–80, 1880; F. A. Anger, Jahrb. K.-k. geol. Reichsanstalt, Min. Mitth., vol. 25, p. 162, 1875. T. N. Dale (Nineteenth Ann. Rept. U. S. Geol. Survey, pt. 3, pp. 153–307, 1899; also Bull. No. 275, 1906) has made a special study of the roofing slates. His bulletin contains a report by W. F. Hillebrand on the composition of the slates, and closes with a valuable bibliography.

[c] See Dale, loc. cit., who cites other analyses. Still others are given in Bull. U. S. Geol. Survey No. 228, pp. 337–346, 1904. J. Roth (Allgem. chem. Geol., vol. 2, p. 588) tabulates 15 analyses of European clays and shales, and H. Rosenbusch (Elemente der Gesteinslehre, 2d ed., p. 442) gives a table of 19. See also E. C. Eckel, Jour. Geol., vol. 12, p. 25, 1904, for the average composition of 36 American roofing slates.

LIMESTONE.

The carbonate rocks, which may be either sedimentary, detrital, or metamorphic, are represented principally by limestone and dolomite. Limestone consists of calcium carbonate more or less impure, and it occurs in many forms of very diverse origin. Some limestone, the variety known as calcareous tufa or travertine, is a chemical precipitate, but in its larger masses the rock is generally of organic origin. Chalk is probably derived from a marine ooze; other limestones are made up of shells and corals. In some the organic remains are conspicuous; in many cases they are quite obliterated. Sandy, argillaceous, glauconitic, ferruginous, phosphatic, and bituminous limestones owe their names to their manifest impurities. Even gaseous inclusions may give a limestone its name, as in the case of the fetid limestones or "stinkstone" of certain well-known localities. This peculiarity is well shown by a bed of calcite in Chatham Township, Canada, described by B. J. Harrington,[a] which contains 0.016 per cent of hydrogen sulphide. A cubic foot of the rock contains about 500 cubic inches of the inclosed gas, to which its offensive odor, when struck or bruised, is due.

The primary source of limestone is obviously to be found in the decomposition of the igneous rocks by carbonated waters. Calcium carbonate is thus produced; it passes into solution in ground water, springs, and streams, and is thence withdrawn by a variety of processes. Its deposition as a chemical sediment, especially from hot springs, and even from sea water, was considered in a previous chapter,[b] but the evidence may well be repeated here and developed a little more fully. Much of the dissolved carbonate is precipitated as a cement in other rocks, but that point needs no further examination now.

When waters charged with calcium carbonate are allowed to evaporate, they deposit their load in the form of sinter, or tufa. This process can be observed at many thermal and "petrifying" springs, and also in the formation of stalactites and stalagmites in limestone caverns. In this way large masses of compact carbonate may be formed, which are oftentimes of great beauty. The so-called "onyx marbles," of which the Mexican "onyx" is a familiar example, are formed in this way. Some rock of this class is stalagmitic, from caverns, and some of it is formed by springs.[c] Its variations in color and texture, to which its ornamental character is largely due, are commonly produced by impurities or inclusions, such as oxide of iron, or even mud and clay.

---

[a] Am. Jour. Sci., 4th ser., vol. 19, p. 345, 1905.

[b] See *ante*, p. 159. Analyses of tufa and travertine are given on p. 160.

[c] For a general account of the onyx marbles see G. P. Merrill, Rept. U. S. Nat. Mus., *1893, p. 541.* A good table of analyses is given in this memoir. The onyx marbles are *usually calcite*, rarely aragonite.

When fresh waters, charged with carbonates, enter the sea, a direct precipitation of calcium carbonate may occur. This form of deposition, however, is exceptional, and few authentic examples of it are recorded. It happens only when the supply of carbonate is in excess of that which can be consumed by living organisms and when the conditions of temperature and evaporation are such as to expel the solvent carbon dioxide. By this is meant the carbon dioxide required to hold the carbonate in solution as bicarbonate. These conditions are found, according to Lyell,[a] in the delta of the Rhone, and B. Willis[b] has noted a similar precipitation of limestone along the margin of the Everglades in Florida. In the latter case, the inflowing water is exposed in broad, shallow sheets to evaporation, agitation, and variations of temperature and pressure. The calcium carbonate is partly thrown down as mud and partly deposited on underlying limestone as a layer of rock.

At Pyramid and Winnemucca lakes, in Nevada, great masses of calcareous tufa are formed, and sometimes, according to I. C. Russell,[c] the deposit takes the shape of oolitic sand. In the latter instance the precipitated carbonate is deposited around nuclei, which may be grains of sand or other foreign bodies. Similar formations occur around Great Salt Lake, but only, as G. K. Gilbert[d] reports, where there is much agitation of the waves. The tufa is not formed in sheltered bays, but where there is surf the overcharge of carbon dioxide is easily driven out of the water, and calcium carbonate is precipitated. Oolitic sand is also found at Great Salt Lake, and in this case its deposition has been traced by A. Rothpletz[e] to the action of minute algæ. This mode of formation needs to be considered further.

In 1864 Ferdinand Cohn[f] studied the formation of travertine at the waterfalls of Tivoli. He found there that many aquatic plants, especially species of *Chara*, mosses, and algæ, became incrusted with calcium carbonate—a fact which he attributed to their activity in absorbing carbon dioxide and so setting the carbonate free; that is, plants consume carbon dioxide and exhale oxygen. When they do this in water containing calcium bicarbonate, they deprive that salt of its second molecule of carbonic acid, and the insoluble neutral carbonate is thrown down. The sinter or travertine is thus formed pri-

[a] Principles of Geology, 12th ed., vol. 1, p. 426.

[b] Jour. Geol., vol. 1, p. 512, 1893.

[c] Mon. U. S. Geol. Survey, vol. 11, pp. 61, 189, 1885.

[d] Idem, vol. 1, p. 167, 1890.

[e] Am. Geologist, vol. 10, p. 279, 1892. See also E. B. Wethered, Quart. Jour. Geol. Soc., vol. 51, p. 196, 1895, on oolite from other localities. Virlet d'Aoust (Compt. Rend., vol. 45, p. 865, 1857), studying the formation of oolite in some Mexican lakes, argues that insect eggs, which are deposited in great numbers on the surface of the water, may act as nuclei.

[f] Neues Jahrb., 1864, p. 580. An earlier paper by Cohn (1862), on the Carlsbad "sprudelstein," I have not been able to see. It is often quoted. W. H. Weed (Ninth Ann. Rept. U. S. Geol. Survey, p. 613, 1889) has shown that the travertine formed around the hot springs of the Yellowstone National Park is produced by the aid of algæ.

marily, but it is afterwards transformed into a compact mass by the deposition of calcite in its interstices; and in times of flood, when the waters are muddy, layers of sediment are laid down with it.

The same sort of plant activity has been repeatedly observed in connection with the marl deposits of certain fresh-water lakes. The term "marl," it must be noted, is very vague, and has been applied not only to earthy forms of calcium carbonate, but also to glauconitic sands containing no carbonate at all. Shell marl, as its name indicates, is largely made up of fragmentary shells; the marl here mentioned is of a different kind. As long ago as 1854 W. Kitchell[a] pointed out that *Chara* took an active part in the production of fresh-water marl. In 1900 C. A. Davis[b] discussed the subject much more fully, with reference to some lakes in Michigan, and came to essentially the same conclusions as Cohn. Davis, however, regards the oxygen liberated by the aquatic plants, *Chara*, etc., as assisting in some way the precipitation of the carbonate; but his equation showing the supposed reaction rests on no experimental basis. The activity of plants in marl formation was also considered by W. S. Blatchley and G. H. Ashley[c] in their report on the lakes of Indiana, but these writers attach fully as much importance to inflowing, lime-bearing springs. The attention which these deposits have received is due to their value for fertilizing purposes. It is possible, as Mr. Bailey Willis has suggested to me, that some marine limestones have been formed by plant agencies. In the shallow seas which are thought to have covered a large part of the North American continent, the calcium carbonate may well have been thrown down by algæ. To produce a permanent deposit, however, the water must have been too warm to carry much carbonic acid in solution, and too shallow for the precipitate, while sinking, to redissolve.

Another process by which calcium carbonate may be precipitated was pointed out by G. Steinmann.[d] He found that albumen, which is present in the organic parts of all aquatic animals, was a distinct precipitating agent. Apparently, by fermentation, the albuminoids generate ammonium carbonate, and to that compound the precipitation of calcium carbonate is due. This or any other alkaline carbonate, entering waters saturated with calcium carbonate, would bring about the separation of the last-named salt.

In studying the formation of shell limestone or coral rock, it is desirable to take account of the fact that calcium carbonate exists

---

[a] First Ann. Rept. Geol. Survey New Jersey, p. 50, 1855. See also G. H. Cook, Geology of New Jersey, 1868, p. 172.

[b] Jour. Geol., vol. 8, pp. 485, 498, 1900; vol. 9, p. 491, 1901.

[c] Twenty-fifth Ann. Rept. Dept. Geology, etc., Indiana, pp. 31–322, 1900. The memoir contains analyses of marls by W. A. Noyes. See also a criticism by C. E. Siebenthal, Jour. Geol., vol. 9, p. 354, 1901. W. C. Kerr, in Geology of North Carolina, vol. 1, p. 187, gives many analyses of marl from that State. An elaborate report on marl, by D. J. Hale, and others, forms part 3 of volume 8, Geol. Survey Michigan, 1900.

[d] Ber. Naturforsch. Gesell. Freiburg, vol. 4, p. 288, 1889.

in at least two distinct modifications—calcite and aragonite. Calcite crystallizes in the rhombohedral division of the hexagonal system, and has, when pure, a specific gravity between 2.71 and 2.72. Aragonite is orthorhombic, and its specific gravity is near 2.94. Calcite is by far the more abundant form, and it is also the more stable.[a] Aragonite alters easily to paramorphs of calcite, but the reverse change rarely, if ever, occurs. The reported paramorphs of aragonite after calcite are of doubtful authenticity.

In recent years two other varieties of calcium carbonate have been described as distinct from calcite and aragonite. The carbonate of some molluscan shells, which had been called aragonite, was made into a distinct species by Agnes Kelly,[b] who named it conchite. The pisolite formed at the hot springs of Hammam-Meskoutine, Algeria, was given specific rank by A. Lacroix,[c] under the name ktypeite. Both of these alleged species have since been identified with aragonite,[d] and need no further consideration here.

Calcite and aragonite may be distinguished from each other, when not distinctly crystallized, either by their differences in specific gravity or in their optical properties. There are also two chemical tests discovered by W. Meigen.[e] When aragonite is immersed in a dilute solution of cobalt nitrate, it is colored lilac, and the color persists on boiling. Calcite, under like treatment, remains white in the cold, but becomes blue on long boiling. Again, calcite, in a solution of ferrous sulphate, produces a yellow precipitate of ferric hydroxide; while aragonite gives a dark-greenish precipitate of ferrous hydroxide. These tests were applied by Meigen to a large number of shells and corals, both recent and fossil, and the mineralogical character of each species was determined. A list of the determinations is given in his memoir.

The importance of discriminating between calcite and aragonite was pointed out very clearly by H. C. Sorby,[f] in his address upon the origin of limestones. He too, much earlier than Meigen, gave data concerning the calcareous parts of different classes of animals, and showed that shells composed of aragonite rarely appeared as

---

[a] See the physicochemical researches of H. W. Foote (Zeitschr. physikal. Chemie, vol. 33, p. 740, 1900), in which this point is developed quantitatively. Important modern papers on the relations between calcite and aragonite are by H. Vater, Zeitschr. Kryst. Min., vol. 21, p. 433, 1893; vol. 22, p. 209, 1894; vol. 24, pp. 366, 378, 1895; vol. 27, p. 477, 1897; and vol. 30, pp. 295, 485, 1899. See also O. Mügge, Neues Jahrb., Beil. Bd. 14, p. 246, 1901.

[b] Mineralog. Mag., vol. 12, p. 363, 1900.

[c] Compt. Rend., vol. 126, p. 602, 1898. For another description of this deposit see L. Duparc, Arch. sci. phys. nat., 3d ser., vol. 20, p. 537, 1888.

[d] On conchite, see R. Brauns, Centralbl. Min. Geol. Pal., 1901, p. 134. H. Vater (Zeitschr. Kryst. Min., vol. 35, p. 149, 1902) examined both conchite and ktypeite. Vater also describes the Carlsbad "sprudelstein," which is aragonite.

[e] Ber. Oberrhein. geol. Verein, 1902, p. 31. See also Meigen, Centralbl. Min. Geol. Pal., 1901, p. 577; A. Hutchinson, Mineralog. Mag., vol. 13, Proc., p. xxviii, 1903; and G. Wyrouboff, Bull. Soc. min., vol. 24, p. 371, 1901.

[f] Quart. Jour. Geol. Soc., vol. 35, Proc., p. 56, 1879.

fossils. The same subject was also discussed by V. Cornish and P. F. Kendall [a] on the basis of experiments in which they found that carbonated waters decompose and disintegrate aragonite shells much more readily than shells formed of calcite. The difference, however, is attributed to structure rather than to mineralogical distinctions. But be that as it may, while calcite organisms remain permanently in fossil form, aragonite shells largely disappear. Only the larger, denser, heavier aragonite structures seem to be preserved to any considerable extent. Kendall [b] has applied these observations to the study of oceanic oozes. The pteropod shells, being mainly aragonite, disappear below 1,500 fathoms depth, while the calcitic globigerina is found in ooze at 2,925 fathoms. From the fact that the Upper Chalk of England contains only calcite organisms, Kendall [c] infers that it was deposited at a depth of at least 1,500 fathoms. Attempts have been made to identify chalk with the globigerina ooze, but L. Cayeux [d] has shown that the two substances are markedly different. Chalk, however, is composed of organic remains, largely foraminiferal, and undoubtedly represents an ooze of some kind.[e] It also contains detrital impurities, and in chalk from northern France Cayeux [f] has identified microscopic particles of quartz, zircon, tourmaline, rutile, magnetite, muscovite, orthoclase, plagioclase, anatase, brookite, chlorite, staurolite, garnet, apatite, ilmenite, and corundum. These impurities exist in very small proportions, and for practical purposes chalk may be regarded as nearly pure carbonate of lime in exceedingly fine subdivision.

In his study of the oolites G. Linck [g] has shown that all recent deposits, so far as he was able to examine them, were composed of aragonite, while the older "fossil" occurrences were calcite—that is, according to his observations, oolite forms as aragonite and slowly changes to the more stable calcite. By experimenting directly with sea water it was found that precipitation with sodium or ammonium carbonate produced aragonite, as determined by Meigen's reaction with cobalt nitrate. When solutions of calcium bicarbonate alone were allowed to evaporate, Linck further found that at ordinary atmospheric temperature calcite was deposited, but that at 60° aragonite was formed. In sea water, then, the separation of calcium carbonate in one modification or the other is conditional upon the process of precipitation, and probably also upon climate. Where organic decay is prominent, the ammonium carbonate produced thereby may act as precipitant, and that is more likely to be the case in warm

[a] Geol. Mag., 1888, p. 66.
[b] Rept. Brit. Assoc. Adv. Sci., 1896, p. 789.
[c] Idem, 1896, p. 791.
[d] Mém. Soc. géol. du Nord, vol. 4, pt. 2, p. 518, 1897.
[e] See C. Wyville Thomson, Depths of the Sea, pp. 467, 501, London, 1874.
[f] *Op. cit.*, p. 257.
[g] *Neues Jahrb.*, Beil. Bd. 16, p. 495. Linck gives a good summary of previous literature upon oolite.

climates than in cold. The direct deposition of calcium carbonate is commonly in the calcite form, because the temperature of oceanic water is usually low. The two minerals in certain cases may be formed together, and this actually happens in the growth of some shells. A shell may consist of a principal mass of calcite, coated by a pearly layer of aragonite, and other associations of the two species in a single animal are well known. In the fossilization of such a shell the aragonite portion is commonly destroyed, while the calcitic layer or fragment is preserved.

In what manner do plants and animals withdraw or segregate calcium carbonate from sea water? To this question there have been many answers proposed,[a] but the problem is essentially physiological, and its full discussion would be inappropriate here. Some of the answers, however, were framed before the modern theory of solutions had been developed, and are therefore no longer relevant. It is not necessary to ask whether the living organisms derive their calcareous portions from the sulphate or chloride of calcium or absorb the carbonate directly, for these salts are largely ionized in sea water. It is only essential that calcium ions and carbonic ions shall be simultaneously present; then the materials for coral and shell building are at hand. The carbonic ions may be of atmospheric origin, or brought to the sea by streams, or developed by the physiological processes of marine animals, or a product of organic decay; all of these sources contribute to the one end and help to supply the material from which limestones are made. Where marine life is abundant, there also the carbonic ions abound. This fact is strikingly shown by W. L. Carpenter's analyses[b] of the gases extracted from sea water and their correlation with the results obtained by dredging. In one series of three samples from different depths, but at the same locality, the gases were composed as follows:

Gases extracted from sea water collected at different depths.

	862 fathoms (bottom).	800 fathoms.	750 fathoms.
O_2	17.22	17.79	18.76
N_2	34.50	48.46	49.32
CO_2	48.28	33.75	31.92
	100.00	100.00	100.00

On the bottom, where the proportion of CO_2 was highest, animal life was abundant, and the dredge brought up a rich haul. At another point, where the CO_2 at the sea bottom fell to 7.93 per cent, the dredge made a very bad haul. In short, from the composition

[a] See R. Brauns, Chemische Mineralogie, pp. 377–378, for a summary of this subject.

[b] In C. Wyville Thomson's Depths of the Sea, pp. 502–511, London, 1874. On p. 513 is given a table of analyses of sea water by Frankland, in which the presence of abundant organic matter is shown.

of the dissolved gases, it was possible to assert whether living forms were scarce or plentiful upon a particular point of the ocean floor.

The most obvious occurrence of limestone building from shells is that which may be observed on many sea beaches. The coquina of Florida is a familiar example of this kind. Masses of shell fragments are there compacted together, cemented by calcium carbonate which has been deposited from solution between the bits of shell, and a fairly substantial rock, available for building purposes, is produced. Some quartz sand is commingled with the shell material, and at one locality, noted by W. H. Dall,[a] limonite, deposited by a chalybeate spring, serves as cementing substance.

In the Bay of Naples, according to J. Walther,[b] calcareous algæ, especially of the genus *Lithothamnion*, are conspicuous makers of limestone; and similar observations have been made elsewhere by others. *Lithothamnion* is a seaweed whose framework or skeleton consists of calcite; another genus, *Halimeda*, which is also active in limestone making, contains aragonite.

From a genetic point of view the coralline limestones have probably been the limestones most carefully studied. Their formation around coral islands and in coral reefs can be observed with the greatest ease, and the process may be followed step by step. First, the living coral; then its dead fragments, broken into sand by the waves; then their cementation by solution and redeposition of calcium carbonate; and finally the solid rock, made up visibly of organic remains, may be seen. In such limestones, according to E. W. Skeats,[c] both calcite and aragonite occur, directly deposited from the sea water. In composition, when recent, they are like the coral itself, nearly pure carbonate of lime, but a little organic matter is also present, some earthy matter, and very small quantities of calcium phosphate. In corals from the Gulf Stream S. P. Sharples[d] found from 95.37 to 98.07 per cent of $CaCO_3$, and 0.28 to 0.84 of $Ca_3P_2O_8$. These results are concordant with those obtained by many other analysts.[e] and need no further illustration just now. The alteration of coral rock to dolomite will be considered later.

From what has been said in the preceding pages, it is evident that important limestones may be formed in various ways, which, however, are chemically the same. Calcium carbonate, withdrawn from fresh or salt water, is laid down under diverse conditions, yielding masses which resemble one another only in composition.

---

[a] Am. Jour. Sci., 3d ser., vol. 34, p. 163, 1887.

[b] Zeitschr. Deutsch. geol. Gesell., vol. 37, p. 329, 1885.

[c] Bull. Mus. Comp. Zool., vol. 42, pp. 53–126, 1903.

[d] Am. Jour. Sci., 3d ser., vol. 1, p. 168, 1871.

[e] See, for example, A. Liversidge, Proc. Roy. Soc. New South Wales, vol. 14, p. 159, 1880; on coral from New Hebrides, and coral rock from Duke of York Island. Also A. J. Jukes-Brown and J. B. Harrison, Quart. Jour. Geol. Soc., vol. 47, p. 224, 1891, on coral rocks from Barbadoes. A number of analyses of coquina, coralline limestones, etc., are given in Bull. U. S. Geol. Survey No. 228, 1904.

An oceanic ooze may produce a soft, flourlike substance such as chalk, or a mixture of carbonate and sand, or one of carbonate and mud or clay. Calcium carbonate, transported as a silt, may solidify to a very smooth, fine-grained rock, while shells and corals yield a coarse structure, full of angular fragments and visible organic remains. Buried under other sediments, any of these rocks may be still further modified, the fossils becoming more or less obliterated, until in the extreme case of metamorphism a crystalline limestone is formed. All trace of organic origin has then vanished, a change which both heat and pressure have combined to bring about, aided perhaps by the traces of moisture from which few rocks are free. Several experimental investigations bear directly upon this class of transformations.

To illustrate the influence of pressure alone, we have an important experiment by W. Spring.[a] A quantity of dry, white chalk, inclosed in a steel tube, was placed in a screw press under a pressure of 6,000 to 7,000 atmospheres, and left there for a little over seventeen years. At the end of that time it had become hard and smooth, with a glazed surface, and was somewhat discolored by iron from the tube. It was also in part distinctly crystalline; in short, it resembled to some extent a crystalline limestone, although the change was not absolutely complete.

When heated above redness at ordinary pressures, limestone decomposes into carbon dioxide and lime. This is the common change produced in a limekiln. Under pressure, however, this dissociation is prevented, and calcium carbonate may be apparently fused. Over a century ago Sir James Hall[b] heated limestone in closed vessels and obtained from it a product identical in general character with crystalline marble. Since Hall's time the experiment has been repeated by a number of other investigators, under varying conditions, with various degrees of success, and with quite dissimilar interpretations. It was supposed at first that Hall had fused limestone, and this belief was prevalent for many years. G. Rose,[c] however, transformed a compact limestone into marble as Hall had done, but without evidence of fusion; and A. Becker,[d] in a more extended research, found that by moderate heat and relatively slight pressure calcium carbonate could be converted into a finely granular mass. A fine powder of the carbonate even developed into larger grains of calcite without either fusing or softening.

---

[a] Zeitschr. anorg. Chemie, vol. 11, p. 160, 1896.

[b] Trans. Roy. Soc. Edinburgh, vol. 6, 1812, p. 71. The experiments were performed in 1805. For a summary of the results obtained by Bucholz, Petzholdt, and Richthofen, see J. Lemberg, Zeitschr. Deutsch. geol. Gesell., vol. 24, pp. 237–241, 1872. Lemberg criticizes the conclusions drawn from Hall's data, and expresses a strong doubt as to whether fusion actually occurred.

[c] Pogg. Annalen, vol. 118, p. 565, 1863.

[d] Min. pet. Mitth., vol. 7, p. 122, 1886. Becker also gives a good summary of the earlier literature of the subject.

In the experiments of H. Le Chatelier[a] an actual fusion of the carbonate was perhaps effected. The chemically precipitated carbonate was inclosed in a steel cylinder between two pistons, under a pressure of about 1,000 kilograms to the square centimeter. Heat was applied by an electric current passing through a spiral of platinum wire embedded in the mass, and the temperature attained was about 1,050°. Under these conditions the calcium carbonate near the spiral was fused to a translucent mass resembling some marbles. Between the fused and unfused portions there was a sharp demarcation, with no indication of any intermediate state. In his second paper Le Chatelier states that even at 1,020° and under slight or insignificant pressure calcium carbonate agglomerates to a crystalline mass. In similar experiments A. Joannis[b] was able to transform chalk into something like marble at a temperature above the melting point of gold and under a pressure of 15 atmospheres. Joannis suggests that the melting point of calcium carbonate may perhaps be lowered by pressure. H. E. Boeke,[c] however, found that although the carbonate sinters together at temperatures between 1,400° and 1,500°, under a pressure of 30 atmospheres of carbon dioxide, it undergoes partial dissociation, but does not appear to fuse.

From all of this evidence we may conclude that the change from apparently amorphous calcium carbonate to a distinctly crystalline limestone or marble may be effected by pressure alone, heat alone, or both together. Actual fusion may or may not occur; at all events it seems to be unnecessary. Furthermore, it is highly probable that water plays some part in bringing about the transformation, for in geological phenomena its influence is rarely excluded. If water did no more than to dissolve and redeposit particles of carbonate, it would go far toward producing the observed change in structure. Under those conditions the carbonate would, in time, become a coarsely crystalline or granular mass of calcite.

The following analyses of limestones are all taken from the laboratory records of the United States Geological Survey:[d]

---

[a] Compt. Rend., vol. 115, pp. 817, 1009, 1892. Two papers.

[b] Idem, vol. 115, pp. 934, 1236, 1892. Two papers.

[c] Zeitschr. anorg. Chemie, vol. 50, p. 244, 1906. Boeke found that aragonite is transformed into calcite at about 470°.

[d] See Bull. No. 228, pp. 301–336, 1904, where 234 analyses of carbonate rocks are given. For other data see T. C. Hopkins, Ann. Rept. Geol. Survey Arkansas, 1890, vol. 4. S. W. McCallie, Bull. No. 1, Geol. Survey Georgia, 1894. F. G. Clapp, Bull. U. S. Geol. Survey No. 249, 1905, gives many analyses compiled from the geological reports of Pennsylvania. H. Ries and E. C. Eckel, Bull. No. 44, New York State Mus., 1901. Ries, Fifty-first Ann. Rept. New York State Mus., pt. 2, pp. 357–467, 1899. E. C. Eckel, Bull. U. S. Geol. Survey No. 243, 1905, on cement materials. W. G. Miller, Rept. Bur. Mines (Ontario), 1904, pt. 2. T. C. Hopkins and C. E. Siebenthal, Twenty-first Ann. Rept. Dept. Geology, etc., Indiana, pp. 293–427, 1896.

Analyses of limestones.

A. Limestone, Lee, Massachusetts. Analysis by G. Steiger.
B. Limestone, Silverdale, Kansas. Analysis by C. Catlett.
C. Lithographic stone, Solenhofen, Bavaria. Analysis by Steiger.
D. Oolitic sand, Great Salt Lake, Utah. Analysis by T. M. Chatard.
E. Coquina, Key West, Florida. Analysis by F. W. Clarke.
F. Recent coral (*Siderostria*), Bermuda. Analysis by L. G. Eakins.
G. Composite analysis, by H. N. Stokes, of 345 limestones.
H. Composite analysis by Stokes of 498 limestones used for building purposes. Does the high proportion of silica determine the availability of these rocks to structural ends?
Ideally pure calcium carbonate contains 56.04 per cent of CaO and 43.96 of CO_2.

	A.	B.	C.	D.	E.	F.	G.	H.
SiO_2	0.95	5.27	1.15	[a] 4.03	0.25	0.23	5.19	14.09
TiO_2	.....	.....	.....	.....	.....	.....	.06	.08
Al_2O_3	.09	1.07	.45	.20	.56	trace	.81	1.75
Fe_2O_3	none	.71	.....	.....	.....	.....	.54	.77
FeO	.10	.32	.26	.....	.....	.....	.....	.....
MnO	.....	.....	.....	.....	.....	.....	.05	.03
CaO	54.75	50.36	53.80	51.33	51.52	55.16	42.61	40.60
MgO	.56	.56	.56	.72	2.08	.20	7.90	4.49
K_2O	.15	.10	.07	.63	.....	.....	.33	.58
Na_2O	.02	.20	.....	.....	.....	.....	.05	.62
Li_2O	.....	.....	.....	.....	.....	.....	trace	trace
H_2O-	.08	.78	.23	.83	3.19	.54	.21	.30
H_2O+	.....	.....	.69	.....	.....	.....	[b] .56	[b] .88
P_2O_5	.03	.06	.....	trace	.....	.....	.04	.42
CO_2	43.38	40.34	42.69	41.07	41.58	43.74	41.58	35.58
S	.....	.....	.....	.....	.....	.....	.09	.07
SO_3	.05	.07	none	.89	.....	.....	.05	.07
Cl	.....	.....	.....	.....	.....	.....	.02	.01
Organic	.....	.....	.....	.27	.....	.....	.....	.....
	100.16	99.84	99.90	99.97	99.18	99.87	100.09	100.34

[a] Insoluble in hydrochloric acid. [b] Includes organic matter.

Limestones undergo alteration in several ways. They may be silicified by percolating waters, or phosphatized, as is often seen on guano islands. By oxidation of inclosed pyrite, acid sulphates can be formed, and these will alter the limestone partially to gypsum. Acid waters dissolve limestone with evolution of carbon dioxide; and some effervescent springs may owe their sparkling qualities to reactions of this kind. A honeycombed limestone at the bottom of Lake Huron was possibly corroded by water of an acid type. R. Bell[a] found the water of the lake over the limestones to be distinctly acid, the acidity having been possibly derived from sulphides in Huronian rocks to the northward. By thermal metamorphism a limestone may be profoundly altered; but that class of changes is to be considered in another chapter. By far the most important alteration, however, is that produced by waters containing carbon dioxide, especially meteoric waters. These dissolve limestone, and the caverns formed in limestone regions are produced in this way. Great masses of limestone are thus removed, to be deposited, generally in a diffused form, elsewhere. At the same time, the insoluble residual impurities are left behind, in the form of sand, clay, ores of manganese and iron,

[a] Bull. Geol. Soc. America, vol. 6, p. 302, 1894.

etc.[a] Some analyses of such residual clays are given in the preceding chapters. These residues are very variable in composition, and rarely approximate to kaolin. This point was developed by H. Le Chatelier,[b] who dissolved several calcareous marls in acetic acid, and analyzed the residual silicates. Kaolinite was not found in them; but hydrous silicates of aluminum, ill defined and impure, were generally obtained. In one sample from the French Congo, the residue was a silicate of magnesium. According to A. L. Ewing,[c] the rate of limestone erosion in Spring Creek Valley, Center County, Pennsylvania, amounts to 275 tons per square mile per annum.[d] This corresponds to a lowering of the land surface in that region of about 1 foot in nine thousand years.

DOLOMITE.

In the foregoing pages upon limestone, the magnesian varieties have been purposely left out of account. They represent transitions from calcium carbonate to dolomite, $CaMg(CO_3)_2$, a rock of great importance both practically and theoretically, and one which demands separate consideration. In addition to dolomite, it is necessary also to consider magnesium carbonate itself, magnesite, and its hydrous derivatives, of which several are known. Like calcium carbonate, these species originate in very different ways, and some of the processes by which they form must be discussed in connection with the subject of serpentine later. Only the compounds of sedimentary or organic origin fall within the scope of this chapter.

The double carbonate, dolomite, can be produced artificially by several methods, and its accidental formation has also been observed. C. de Marignac[e] obtained it by heating calcium carbonate with a solution of magnesium chloride to 200°, under a pressure of 15 atmospheres. J. Durocher[f] heated fragments of porous limestone with dry magnesium chloride to dull redness in a closed gun barrel, in such manner that the carbonate was impregnated by the vapor of the chloride. Under those conditions the limestone was partly changed to dolomite. The local formation of dolomite by volcanic action is explained by this experiment, but that mode of occurrence is of minor import. C. Sainte-Claire Deville[g] saturated chalk with a solution of magnesium chloride and heated the mass upon a sand bath. A partial replacement of lime by magnesia was thus effected.

[a] See I. C. Russell, Bull. U. S. Geol. Survey No. 52, 1889, for a discussion of this subject. Russell regards the Clinton iron ores of Alabama as residues of this kind, but his views on that matter have been contested.

[b] Compt. Rend., vol. 118, p. 262, 1894.

[c] Am. Jour. Sci., 3d ser., vol. 29, p. 29, 1885.

[d] Or 29.173 grams per square meter.

[e] Cited in a memoir by A. Favre, Compt. Rend., vol. 28, p. 364, 1849.

[f] *Idem*, vol. 33, p. 64, 1851.

[g] *Idem*, vol. 47, p. 91, 1858.

and similar results were obtained with corals. A. von Morlot,[a] by heating powdered calcite with magnesium sulphate to 200° in a sealed tube, transformed the carbonate into a mixture of dolomite and gypsum. This reaction had been suggested by Haidinger, in order to account for the frequent association of the two last-named species. The process, however, is reversible, and solutions of gypsum will transform dolomite into calcium carbonate and magnesium sulphate. Efflorescences of the latter salt are not uncommon in gypsum quarries, and H. C. Sorby[b] has observed them in Permian limestones. Because of this reaction, according to Sorby, the upper beds of magnesian limestone are often more calcareous than the lower. Their content in magnesia has been diminished in this way.

The elaborate experiments of T. Sterry Hunt[c] upon the precipitation of calcium and magnesium carbonates, especially by alkaline carbonates from bicarbonate solutions, are too complex to admit of anything like a full summary here. In most of the experiments mixtures of calcium carbonate with the hydrated magnesium compound were obtained. When, however, the pasty mass formed by precipitating the two carbonates together was heated to temperatures above 120°, union took place and dolomite was formed. From the fact that a sedimentary dolomite could thus be produced, Hunt concluded that dolomite is generally a chemical precipitate, a view which is not widely held to-day.

In several instances the deposition of magnesian travertine and even of crystallized dolomite from natural waters has been observed. According to J. Girardin,[d] the travertine formed by the mineral spring of St. Allyre, near Clermont, in France, is rich in magnesium carbonate. In recent travertine he found 28.80 per cent of $MgCO_3$ with 24.40 of $CaCO_3$, and in old travertine the proportions were 26.86 and 40.22, respectively. Whether this represents dolomite or a mixture of the carbonates was not determined. A. Moitessier[e] found that in a badly closed bottle of water from another French spring distinct crystals of dolomite had been deposited. In another water from a hot spring near the Dead Sea, which was transported to Paris in a sealed tube, similar crystals were found by A. Terreil.[f] From this observation Lartet concludes that the dolomites of the Dead Sea region were probably formed through the impregnation of limestones by magnesian waters.

On the other hand, E. von Gorup-Besanez[g] found that springs

[a] Jahresb. Chemie, 1847–48, p. 1290. Also Compt. Rend., vol. 26, p. 311, 1848.
[b] Rept. Brit. Assoc. Adv. Sci., 1856, p. 77.
[c] Am. Jour. Sci., 2d ser., vol. 28, pp. 170, 365, 1859; vol. 42, p. 49, 1866.
[d] Ann. mines, 3d ser., vol. 11, p. 460, 1837.
[e] Jahresb. Chemie, 1866, p. 178.
[f] Cited by L. Lartet, Bull. Soc. géol., 2d ser., vol. 23, p. 750, 1866.
[g] Liebig's Annalen, 8th Supp. Bd., p. 230, 1872.

from the dolomites of the Jura, which contain calcium and magnesium carbonates in the dolomite ratio, deposit the mixed salts upon evaporation and not the double compound. Gorup-Besanez observed, however, that carbonated waters, acting upon dolomite, dissolve the mineral with its ratios undisturbed. The occurrence of dolomite geodes in magnesian limestones would seem to show that in such cases at least the double salt can be re-formed. Similar results were earlier obtained by T. Scheerer,[a] when artificial solutions of calcium and magnesium bicarbonate were allowed to evaporate spontaneously at ordinary temperatures. Only mixtures were formed, no dolomite. He also found that powdered chalk precipitated magnesium carbonate from a bicarbonate solution, although carbonated waters dissolved calcium carbonate out of magnesian limestones. The last observation, however, had been made by other chemists previously.

In Hunt's investigations it became evident that temperature is an important factor in the formation of dolomite. The same conclusion is to be drawn from F. Hoppe-Seyler's experiments.[b] At ordinary temperatures a solution of magnesium chloride acting upon calcium carbonate for several months yielded no dolomite. Sea water mixed with an excess of calcium carbonate and saturated with carbon dioxide, after standing four months in a closed flask, also failed to form dolomite. But when magnesium salts or sea water were heated with calcium carbonate in sealed tubes, then both dolomite and magnesite were formed. Carbonate of lime, heated to over 100° with a solution of magnesium bicarbonate, gave this result.

In the earlier researches upon the conversion of limestone into dolomite little or no attention seems to have been paid to the mineralogical character of the initial substance. In C. Klement's experiments[c] aragonite, the less stable form of calcium carbonate and the form which is abundant in coral reefs, was especially studied. It was found that a concentrated solution of magnesium sulphate, at 60°, would partially transform aragonite into magnesium carbonate, and coral was altered in the same way. Calcite, by similar treatment, was but slightly attacked. Magnesium sulphate and sodium chloride, used together, altered aragonite strongly, forming a product containing as high as 41.5 per cent of $MgCO_3$. Normal dolomite, ideally pure, would contain 45.7 per cent. Magnesium chloride proved to be less active than the sulphate. The products of these reactions consisted, however, not of dolomite, but of the mixed carbonates, and Klement suggests that mixtures of this kind would prob-

[a] Neues Jahrb., 1866, p. 1.

[b] Zeitschr. Deutsch. geol. Gesell., vol. 27, p. 509, 1875. In this connection it may be noted that H. C. Sorby (Quart. Jour. Geol. Soc., vol. 35, Proc., p. 56, 1879) found that Iceland spar, in a solution of magnesium chloride, became slowly incrusted with magnesium carbonate.

[c] *Bull.* Soc. belge géol., vol. 9, Mém. 3, 1895. Min. pet. Mitth., vol. 14, p. 526, 1894.

ably, in time, recrystallize into the double salt. He attributes the formation of dolomite to the action of sea water in closed lagoons upon aragonite—that is, upon coral rock. The latter, as will be shown presently, is often the parent of dolomite. It must be observed, however, that aragonite is not the only parent of dolomite, for pseudomorphs of dolomite after calcite are well known.[a]

Two other investigations upon the synthesis of dolomite remain to be mentioned. L. Bourgeois and H. Traube [b] obtained it by heating a solution of magnesium chloride, calcium chloride, and potassium cyanate, KCNO, to 130° in a sealed tube. This mode of production has no geological significance, except in so far as it shows that the necessary carbonic acid may be supplied from organic or semiorganic sources. Such sources are considered by F. W. Pfaff,[c] who has shown that the products of organic decomposition, as derived from the coral-building organisms, probably take part in the dolomitic process. Not alone carbonic acid is generated during organic decay, but ammonium carbonate, ammonium sulphide, and hydrogen sulphide are also produced, and these compounds, according to Pfaff, appear to assist in the formation of dolomite. In a later paper, however, Pfaff [d] states that when a current of carbon dioxide is passed for a long time through a warm solution of the sulphates and chlorides of magnesium and calcium, the solution, upon slow evaporation at a temperature of 20° to 25°, yields a residue which contains a double carbonate insoluble in weak hydrochloric acid. That is, under these conditions, which might be approximately paralleled in the concentration of sea water, dolomite may be formed.

Under certain exceptional conditions magnesium carbonate may be deposited alone. A solution of the bicarbonate, on evaporating spontaneously, forms the hydrous salt $MgCO_3.3H_2O$, which corresponds to the rare mineral nesquehonite. This species, described by F. A. Genth and S. L. Penfield,[e] from the Nesquehoning anthracite mine in Pennsylvania, was there produced by the alteration of a basic carbonate, lansfordite,[f] $3MgCO_3.Mg(OH)_2.21H_2O$, which first formed as stalactites in one of the galleries. Nesquehonite has since been identified by C. Friedel [g] as a similar formation in a French coal mine. Such stalactiform minerals are obviously deposited from solution in carbonated waters.

The term "dolomite" is sometimes loosely used by geologists as equivalent to magnesian limestone. Any limestone containing

[a] See Blum's Pseudomorphosen, p. 51, and Nachtrag, p. 23.
[b] Bull. Soc. min., vol. 15, p. 13, 1892.
[c] Neues Jahrb., Beil. Bd. 9, p. 485, 1894. A later paper by Pfaff is published in vol. 24, p. 529, 1907.
[d] Centralbl. Min. Geol. Pal., 1903, p. 659.
[e] Am. Jour. Sci., 3d ser., vol. 39, p. 121, 1890.
[f] Described by Genth, Zeitschr. Kryst. Min., vol. 14, p. 255, 1888.
[g] Bull. Soc. min., vol. 14, p. 60, 1891.

notable amounts of magnesia may be described by this name. Properly, the word should be restricted to the definite double carbonate, which occurs both as a well-crystallized mineral and as a massive rock. When, after allowing for natural impurities, the molecular ratio of lime to magnesia in such a rock is 1:1, it is legitimately, at least in most cases, a dolomite, but exceptional mixtures are of course possible. Ordinarily, a magnesian limestone is a mixture of dolomite and calcite, with such impurities as sedimentary rocks and limestones in general are likely to contain. In these rocks the ratio of lime to magnesia is greater than 1:1; but in computation it must be remembered that some dolomites contain iron, which replaces magnesia in equivalent amounts. Ferruginous dolomite, or ankerite, is not rare. All the iron of a carbonate rock, however, is not necessarily a part of the carbonate. It may be present as hydroxide or in claylike impurities, and these possibilities must be taken into account in any interpretation of the dolomites. In some cases free magnesian carbonates must also be considered, and in certain alteration products, brucite, MgO_2H_2, may also occur. Commonly the dolomites are fairly simple in composition and difficulties in interpreting the analyses rarely arise.

In the study of natural dolomites as well as in the synthetic experiments which have just been described, it is often necessary to discriminate between the separate carbonates and the true double salt. In most cases this is easily done by taking advantage of differences in solubility. Calcite and aragonite dissolve easily in weak acetic or hydrochloric acid; dolomite and magnesite, at ordinary temperatures, are attacked slowly.[a] These magnesian carbonates are not absolutely insoluble in dilute acids, but they are sufficiently resistant to admit of a rough separation from calcite, and their subsequent identification. From a mixture of dolomite and calcite, cold dilute acetic acid will dissolve the latter mineral, leaving nearly all of the dolomite unattacked. From mixtures of calcite and magnesite, on the other hand, all of the lime will be thus removed. Some magnesia also may pass into solution, for as Vesterberg has shown, there are magnesian carbonates, probably basic or hydrous, which dissolve with ease. Magnesite is even more refractory toward solvents than dolomite.

Furthermore, discrimination between calcite and dolomite can be effected by microchemical tests. Among the best of these is that

[a] Upon these differences in solubility, there is an abundant literature, which has been well summarized by A. Vesterberg, Bull. Geol. Inst. Upsala, vol. 5, p. 97, 1901; vol. 6, p. 254, 1905. See also the synthetic papers already cited, and Haushofer, Sitzungsb. Akad. München, vol. 11, p. 220, 1881.

described by J. Lemberg,[a] whose reagent consists of a solution of aluminum chloride and hæmatoxylin (extract of logwood). This reagent deposits a violet coating upon calcite surfaces, but leaves dolomite uncolored. According to F. Cornu,[b] the two minerals are easily distinguished by covering the powdered material with water and adding a few drops of phenolphthalein solution. Calcite gives a strong coloration; dolomite is affected but slightly.

So far as the experimental evidence goes, dolomite can be formed in several ways. In specific cases, however, field evidence must be brought to bear. First, dolomite may exist as a true chemical sediment, although occurrences of this kind are probably rare. G. Leube[c] described a "fresh-water dolomite" near Ulm, in Bavaria; and C. W. Gümbel,[d] studying the dolomites of the same region, which are interbedded with limestones, likewise asserts their sedimentary origin. T. Scheerer[e] also argues that the oldest dolomites were formed as chemical precipitates; and T. Sterry Hunt's[f] positive views on this subject are well known. Hunt's experiments help us to understand how sediments of dolomite may perhaps be formed; and it is also possible that algæ may precipitate mixed carbonates just as they do calcareous marl. When the carbonates are thrown down together, heat and pressure may combine to bring about their union. These suggestions relate to possibilities only; and it would be rash to assert positively that dolomites are ever formed on a large scale by direct sedimentation.

Magnesian carbonates are, however, deposited with calcium carbonate by marine organisms, albeit in small relative amounts. G. Forchhammer[g] made many analyses of shells and corals, finding magnesium carbonate in them in percentages ranging from 0.15 to 7.64, 1 per cent being rather above the average. This result has been confirmed by many other investigators. In *Lithothamnium nodosum* Gümbel[h] found 2.66 per cent of MgO and 47.14 of CaO; and Högbom[i] in fourteen analyses of algæ belonging to this genus reports from 1.95 to 13.19 per cent of $MgCO_3$. To these higher figures reference will be made later.

---

[a] Zeitschr. Deutsch. geol. Gesell., vol. 40, p. 357, 1888. In vol. 39, p. 489, 1887, Lemberg describes tests based upon the use of ferric chloride and ammonium sulphide. In a still earlier paper (op. cit., vol. 24, p. 226, 1872) Lemberg gives tests with silver nitrate, which stains calcite and dolomite, after ignition, unequally. See also Otto Meyer, Zeitschr. Deutsch. geol. Gesell., vol. 31, p. 445, 1879.

[b] Centralbl. Min. Geol. Pal., 1906, p. 550.

[c] Neues Jahrb., 1840, p. 371.

[d] Sitzungsb. Akad. München, 1871, Heft 1, p. 45.

[e] Neues Jahrb., 1866, p. 1.

[f] See Chemical and Geological Essays, p. 80, and the literature already cited.

[g] Neues Jahrb., 1852, p. 854.

[h] Abhandl. Akad. München, vol. 11, p. 26, 1871.

[i] Neues Jahrb., 1894, vol. 1, p. 262. The analyses were made by a number of chemists for Högbom, who gives data for several shells and corals also. In the latter organisms the magnesia was low.

From these data it is clear that limestones formed by marine organisms must contain magnesia, and evidence shows that as a rule they contain rather more of it proportionally than the remains from which they are made. The analyses of oceanic oozes collected by the *Challenger* expedition, as discussed by Högbom,[a] show this fact very well, and also illustrate the tendency of the magnesium carbonate to accumulate, while the more soluble calcium carbonate is dissolved away. That is, by the leaching of these deposits they become relatively enriched in magnesia, until in the extreme cases something very near the true dolomite ratio is attained. In short, a dolomite may be produced by concentration from a magnesian limestone, and either sea water or percolating waters of atmospheric origin may operate in this way. Grandjean [b] was probably the first to interpret certain dolomites as having been formed by this process; a view which various other writers have adopted and which is well developed in Högbom's memoir. Högbom, in addition to the facts already cited, brings other important evidence to bear upon the problem. He shows that stalactites from caverns in the coral rocks of Bermuda contain only 0.18 to 0.68 per cent of magnesium carbonate, while the rocks themselves carry about five times as much.[c] Here the lime salt has dissolved much more freely than the magnesium compound. Högbom also studied the marine marls of Sweden, and found that the transported material contained progressively larger proportions of magnesium carbonate, as its distance from the parent limestone increased. Near its point of origin the marl carried 3.7 parts of $MgCO_3$ tc 100 of $CaCO_3$; and from these figures the ratio was gradually raised to 36 $MgCO_3$ and 100 $CaCO_3$. In these finely divided sediments the leaching out of calcium carbonate by atmospheric and glacial waters is naturally rapid, and the concentration of the dolomitic portion is effected with great ease. This mode of concentration, then, must be recognized as real, and as accounting in part at least for the formation of dolomite.[d] But it is not the whole story. It accounts for some occurrences, but not all.

Coral rock, it will be remembered, consists chiefly of calcium carbonate, which in the living forms is mineralogically aragonite. But in 1843 J. D. Dana,[e] in a rock from the coral island of Makatea, in the Pacific, reported magnesium carbonate to the extent of 38.07 per cent. This approached the dolomite ratio, which requires 45.7 per

[a] Op. cit., p. 267.

[b] Neues Jahrb., 1844, p. 543.

[c] It is well known that stalactites from caverns in dolomitic limestones consist essentially of calcium carbonate, with little or no magnesia.

[d] For an elaborate discussion of this side of the dolomite problem see G. Bischof, Lehrb. chem. phys. Geol., 2d ed., pp. 52–91. The older data are well summarized. See also C. W. Hall and F. W. Sardeson, Bull. Geol. Soc. America, vol. 6, p. 189, 1894.

[e] *See Dana's* Coral and Coral Islands, 3d ed., p. 393. Analyses by B. Silliman, jr. The *island is called* Metia by Dana.

cent, and the thought was at once suggested that the rock had been dolomitized by the introduction of magnesia from sea water, the latter having possibly been first concentrated by evaporation in a shallow lagoon.

Since Dana's observation was made, many other investigators have recorded similar enrichments of coral reefs, and the synthetic experiments of various chemists, as cited in the preceding pages, have shown that the indicated reaction can actually take place. Klement's experiments, especially, have helped to make this point clear. In a coral reef from Porta do Mangue, Brazil, J. C. Branner[a] reports 6.95 per cent of magnesia, equivalent to 14.5 of carbonate, while the corals themselves contined only 0.20 to 0.99 per cent of MgO. In the islands of the Pacific Ocean a large number of similar cases have been observed, the analyses by E. W. Skeats[b] rising to a maximum of 43.3 per cent of $MgCO_3$. From instances of this kind, and from the resemblance of many dolomites to reef rocks, it has been commonly inferred that dolomitization is generally, or at least often, effected in this way, lime being gradually removed and replaced by magnesia from the sea.[c]

The most striking illustration of this mode of transformation is furnished by the borings on the atoll of Funafuti, as discussed by J. W. Judd.[d] The principal boring was driven to a depth of over 1,100 feet, through coral and coral rock all the way, and samples of the cores were analyzed for practically every 10 feet of the distance. From the table of data presented by Judd, the following figures are selected:

Magnesium carbonate in borings on atoll of Funafuti.

Depth, feet.	Percentage $MgCO_3$.	Depth, feet.	Percentage $MgCO_3$.
4	4.23	295	3.6
13	7.62	400	3.1
15	16.4	500	2.7
20	11.99	598	1.06
26	16.0	640	26.33
55	5.85	698	40.04
110	2.11	795	38.92
159	0.79	898	39.99
200	2.7	1,000	40.56
250	4.9	1,114	41.05

These figures are very remarkable. They show, first, an enrichment in magnesium carbonate near the surface, then an irregular rising

[a] Bull. Mus. Comp. Zool., vol. 44, p. 264, 1904. Analysis of rock by R. E. Swain, of the corals by L. R. Lenox.

[b] Idem, vol. 42, pp. 53-126, 1903.

[c] See R. Harkness, Quart. Jour. Geol. Soc., vol. 15, p. 103, 1859, on dolomite near Cork, Ireland. Also C. Doelter and R. Hoernes, Jahrb. K.-k. geol. Reichsanstalt, vol. 25, p. 293. These authors give a bibliography of dolomitization, down to 1875, the date of their memoir.

[d] The Atoll of Funafuti, published by the Royal Society, London, 1904. For Judd's report on the chemical examination, see pp. 362-389.

and falling in much smaller amounts, while below 700 feet the approach to a dolomite ratio is apparent. The surface enrichment Judd attributes to a possible leaching out of lime salts, and the irregularities may be due in part to differences in the proportions of the various reef-forming organisms. Some of these are more soluble than others, as we have already seen. Algæ, especially *Lithothamnion* and *Halimeda*, are abundant at Funafuti, and Judd suggests that the abnormally high magnesia found by Högbom in these organisms may also be due to leaching, possibly aided by carbon dioxide derived from the decomposition of the plants after death. The replacement of lime by magnesia extracted from sea water probably takes place at the same time, so that two distinct processes combine to produce the final result. It is noticeable that the lower portions of the core, which were the earliest deposited and have therefore been acted upon for the longest time, are the most completely changed.

In this double process of leaching and replacement, we find the nearest approach to a satisfactory theory of dolomitization in coral reefs. It is, however, not general, as the following analyses by George Steiger,[a] of borings from an artesian well at Key West, Florida, clearly show:

Lime and magnesia in borings at Key West.

Depth, feet.	Percentage CaO.	Percentage MgO.	Depth, feet.	Percentage CaO.	Percentage MgO.
25	54.03	0.29	1,325	54.49	0.62
100	54.01	.77	1,400	55.12	.30
150	54.38	.86	1,475	54.48	.73
350	51.46	1.67	1,625	53.90	1.14
600	48.87	2.50	1,850	54.28	1.12
775	46.53	6.70	2,000	54.02	1.06
1,125	53.84	.86			

Here there is a progressive magnesian enrichment down to 775 feet, and then a falling off, but no such thorough alteration appears as at Funafuti. What different conditions may have existed to account for these differences of composition is not known.

It is of course evident that dolomitization by replacement need not be limited to the action of sea water upon coral reefs. Magnesian spring waters may be equally effective, and are so locally, as observed by J. E. Spurr[b] in the rocks about Aspen, Colorado. In that region hot springs containing magnesium are manifestly operative in transforming limestone to dolomite. But large areas of dolomite are not likely to originate in that way. Where, however, limestones are

[a] Analyses made in the laboratory of the United States Geological Survey. Published in full in Bull. No. 228, p. 309, 1904. Boring described by E. O. Hovey, Bull. Mus. Comp. Zool., vol. 28, p. 63, 1896.

[b] Mon. U. S. Geol. Survey, vol. 31, p. 206, 1898. Spurr (p. 216) also reports an interesting silicification of limestones, which is visible in all its stages. The final product is made up of quartz grains.

situated near magnesian eruptive rocks, dolomitization due to this cause is to be anticipated.

The following analyses of magnesian limestones were made in the laboratory of the United States Geological Survey.[a] Other analyses in abundance are scattered through the literature of limestones.

Analyses of magnesian limestones.

A. Green Peak Quarry, Dorset, Vermont. Analysis by George Steiger. Described by T. N. Dale in Bull. No. 195, 1902.

B. "Knox dolomite," Morrisville, Alabama. Analysis by W. F. Hillebrand. Described by I. C. Russell in Bull. No. 52, 1889.

C. Penokee district, Wisconsin. Analysis by Hillebrand. See R. D. Irving and C. R. Van Hise, in Mon., vol. 19, 1892.

D. "Niobrara dolomite," Denver Basin, Colorado. Analysis by L. G. Eakins. Described by Emmons in Mon., vol. 27, 1896.

E. Near Red Mountain, Silver Peak district, Nevada. Analysis by Steiger.

F. The theoretical composition of ideally pure dolomite.

	A.	B.	C.	D.	E.	F.
Insoluble				12.01	0.31	
SiO_2	8.36	3.24	0.63			
Al_2O_3	1.77	.17		.54		
Fe_2O_3	.22	.17	.03	.11		
FeO	1.08	.06	.75		1.89	
MnO			.08	.20		
MgO	16.68	20.84	20.68	18.03	20.19	21.9
CaO	29.03	29.58	30.94	27.49	30.35	30.4
Na_2O	.06					
K_2O	1.08					
H_2O-	.03	.30	.27	.61		
H_2O+	.42					
CO_2	41.66	45.54	46.27	41.40	47.21	47.7
P_2O_5				.03		
Cl			trace			
	100.39	99.90	99.65	100.42	99.95	100.0

Under ordinary atmospheric and aqueous conditions dolomite alters like limestone, but less readily. By volcanic agencies, that is, the combined action of heated or fused rocks and steam, dolomite is sometimes transformed into a substance which was once thought to be a distinct mineral species, and was named predazzite and pencatite by different investigators. This substance has been interpreted by Damour,[b] G. Hauenschild,[c] J. Roth,[d] and J. Lemberg,[e] as a mixture of calcite and brucite, MgO_2H_2. O. Leneček,[f] however, regards it as a mixture of calcite and hydromagnesite, the latter being partly pseudomorphous after periclase and partly an infiltration. In either case the dolomite has been altered by the transformation of its magnesium carbonate into a basic salt or into hydroxide. The latter

[a] See Bull. No. 228, pp. 301–335, 1904, for these analyses and others.

[b] Bull. Soc. géol., 2d ser., vol. 4, p. 1050, 1847.

[c] Sitzungsb. Akad. Wien, vol. 60, p. 795, 1870.

[d] See Allgem. chem. Geol., vol. 1, pp. 422–425. Roth cites many analyses of altered dolomites, and gives the data concerning predazzite with considerable fullness.

[e] Zeitschr. Deutsch. geol. Gesell., vol 24, p. 187, 1874.

[f] Min. pet. Mitth., vol. 12, pp. 429, 447, 1892. Leneček gives a good summary of the literature of predazzite.

compound, under some conditions, can be leached away, leaving nearly pure calcite; or it may be dehydrated, forming periclase, MgO. Predazzite was first observed at Predazzo, in the Tyrol; and Lemberg, by acting on normal dolomite from that locality with steam, obtained a similar product. A like alteration of dolomite from a Russian locality was also reported by F. Rosen.[a]

IRON CARBONATE.

Another important rock-building carbonate is siderite, the ferrous carbonate $FeCO_3$. Its formation as bog ore has already been considered,[b] together with its transformation into limonite, but its relations to limestone and dolomite remain to be noticed. Between these rocks there are many transitional mixtures, and ankerite, the ferriferous dolomite, is one of them. This mineral contains iron replacing magnesium, to use the ordinary phraseology, but this implies that the double salt $CaFeC_2O_6$ exists isomorphous with and equivalent to the magnesian compound, dolomite. The two salts, $CaFeC_2O_6$ and $CaMgC_2O_6$, may commingle in any proportion, and varieties containing manganese carbonate are also known. So, too, there are mixtures of magnesite and siderite, known as breunnerite, mesitite, and pistomesite, but they are comparatively unimportant except in the study of isomorphism. The manganese carbonate, rhodochrosite, $MnCO_3$, is usually a mineral of metalliferous veins.

As bog ore, siderite is deposited from a bicarbonate solution in presence of organic matter and out of contact with air. But siderite, like dolomite, may also be formed by replacement when iron solutions act upon limestones. H. C. Sorby[c] found that Iceland spar immersed in a solution of ferrous chloride was slowly transformed into crystalline siderite; in ferric chloride, on the other hand, ferric hydroxide was formed. A similar precipitation of limonite was observed by G. Keller[d] when calcite was treated with ferric sulphate. Reactions of this kind have often been invoked in the interpretation of sedimentary iron ores. J. P. Kimball,[e] for example, regards the reaction of ferrous solutions upon limestones as of the highest importance, and refers to isolated masses of coral reef in Cuba which have been so replaced by iron compounds. Fossils, originally calcareous, but now composed of limonite, are not rare. In the Jurassic limestones of central France ores of iron, manganese, and zinc are widely disseminated. According to L. Dieulafait,[f] these ores were precipitated from solution by calcium carbonate, the iron first, zinc

[a] Arch. Naturkunde Liv., Esth. u. Kurlands, 1st ser., vol. 3, p. 142, 1864.
[b] See *ante*, p. 452.
[c] Quart. Jour. Geol. Soc., vol. 35, Proc., p. 73, 1879.
[d] Neues Jahrb., 1882, pt. 1, ref., p. 363.
[e] Am. Jour. Sci., 3d ser., vol. 42, p. 231, 1891.
[f] Compt. Rend., vol. 100, p. 662, 1885.

and manganese later. The iron ores are always at the bottom of the series, and the other metals are found in the overlying limestones.

Like carbonate of lime, iron carbonate may be removed from solution by aquatic vegetation. The process, however, is different in one particular. Ferrous carbonate is easily oxidized to limonite, and that change, which takes place in air alone, is doubtless accelerated by the oxygen which the plants exhale. The deposit formed is not siderite then, but hydroxide. Similar precipitation of limonite may also occur from sulphate solutions, as in or near a chalybeate spring in Death Gulch, Yellowstone National Park. Here, according to W. H. Weed,[a] the mosses form, from the water of the spring, an iron sinter which was analyzed by J. E. Whitfield in the laboratory of the United States Geological Survey with the following results:

Analysis of iron sinter.

SiO_2	1.37
Fe_2O_3	63.03
Al_2O_3	.08
SO_3	8.35
H_2O and organic matter	26.94
	99.77

The instability of ferrous carbonate is also shown by the deposits of iron rust around iron-bearing springs in general, and by the formation of stalactites of limonite. Such stalactites were formed exactly like calcite stalactites, by carbonate solutions, only the iron salt has decomposed and left residues of hydroxide. According to T. Sterry Hunt[b] the alteration of siderite to limonite is attended by a contraction of 27.5 per cent, whence limonite ore bodies are often porous or spongy.

The vast deposits of iron ores in the Lake Superior region, limonites, hematites, magnetites, etc., are now regarded as being in great measure secondary bodies derived from iron carbonates of sedimentary origin. The process by which their concentration was probably effected has been summed up by C. R. Van Hise[c] as follows: First, meteoric waters attacked the upper portions of the original carbonate, oxidizing the latter to limonite. In so doing the waters lost their dissolved oxygen and became carbonated. In this condition the waters dissolve ferrous carbonate, with some silicate, and transfer it to lower levels. Later, the surface oxidation having been com-

[a] Am. Geologist, vol. 7, p. 48, 1891.

[b] Canadian Naturalist, vol. 9, p. 431, 1881.

[c] Twenty-first Ann. Rept. U. S. Geol. Survey, pt. 3, p. 326, 1900. Monographs 19, 28, 36, 43, 45, and 46 of the Survey, by Irving, Van Hise, Clements, Smyth, Bayley, and Leith, deal exhaustively with these "Lake Superior" ores. See also J. E. Spurr, Bull. No. 10, Geol. Nat. Hist. Survey Minnesota, 1894, on the Mesabi ores; and S. Weidman, Bull. No. 13, Wisconsin Geol. Nat. Hist. Survey, 1904, on the Baraboo district. Bull. No. 6 of the Minnesota Survey, 1891, by N. H. and H. V. Winchell, is devoted to a discussion of the Minnesota deposits.

pleted, waters charged with atmospheric oxygen percolate downward, mingle with the iron solutions previously formed, and precipitate limonite. The latter, by heat and pressure, may be transformed to hematite. A similar interpretation is given by A. Brunlechner[a] to the associated siderite and limonite at Hüttenberg in Carinthia. In this case, however, the waters charged with ferrous carbonate redeposit it upon contact with limestones. Here also the original formation, the main ore body, is sedimentary.

The following analyses represent mixed carbonates, mainly ferriferous:

Analyses of mixed carbonates.

A. Iron carbonate, Sunday Lake, Michigan. Analysis by W. F. Hillebrand.
B. Iron carbonate, Penokee district, Michigan. Analysis by R. B. Riggs.
C. Iron carbonate, Gunflint Lake, Canada. Analysis by T. M. Chatard.
D. Ferrodolomite, Marquette district, Michigan. Analysis by G. Steiger. For analyses A, B, C, D, and others, see Bull. U. S. Geol. Survey No. 228, pp. 318–320, 1904.
E. Cobaltiferous siderite, from a mine near Neunkirchen, Germany. Analysis by G. Bödlander, Neues Jahrb., 1892, pt. 2, p. 236.
F. Mangandolomite, Greiner, Tyrol. Analysis by K. Eisenhuth, Zeitschr. Kryst. Min., vol. 35, p. 582, 1902. Other analyses of dolomite, etc., are given in this paper.

	A.	B.	C.	D.	E.	F.
Insoluble						0.16
SiO_2	28.86	15.62	23.90	26.97		
TiO_2	.20		none			
Al_2O_3	1.29	4.27	.07	1.30		
Fe_2O_3	1.01	8.14	.44	2.31		
FeO	37.37	32.85	10.72	39.77	45.34	6.59
MnO	.97	5.06	.28	.29		23.41
CoO					3.85	
CaO	.74	.81	22.25	.66	1.21	10.48
MgO	3.64	2.66	8.52	1.94	8.80	14.58
Alkalies				.09		
H_2O-	.68	.68	none	.10		
H_2O+			.99	.51		
P_2O_5			trace	.03		
CO_2	25.21	30.32	32.42	26.20	41.55	45.59
SO_3			.17			
	99.97	100.41	99.76	100.17	100.75	100.81

SILICATED IRON ORES.

In addition to siderite, certain sedimentary silicates serve as sources for limonite and hematite ores. Glauconite, for example, was suggested by R. A. F. Penrose[b] as a possible parent of iron ore, and a green silicate from which the Mesabi ores are derived was placed under glauconite by J. E. Spurr.[c] C. K. Leith,[d] however, in his report on the Mesabi district, has shown that the green mineral of the ferruginous cherts is not glauconite, but a hydrated ferrous or ferroso-ferric silicate, containing no potassium. To this silicate he gives the name greenalite. Its composition, as shown by the anal-

[a] Zeitschr. prakt. Geol., 1893, p. 301.
[b] Ann. Rept. Geol. Survey Arkansas, vol. 1, 1892. This is a monograph on the iron ores of Arkansas.
[c] *Bull. No. 10*, Geol. Nat. Hist. Survey Minnesota, 1894.
[d] *Mon. U. S.* Geol. Survey, vol. 43, pp. 237–279, 1903.

yses made by G. Steiger[a] in the laboratory of the United States Geological Survey, is not accurately determinable, for the green granules can not be mechanically separated from the enveloping chert. Three analyses of the portion of the rock soluble in hydrochloric acid gave the following results, after union of like bases and recalculation to 100 per cent. For comparison with them, in a fourth column, I give an analysis by F. Field[b] of a green, massive, chloritic mineral associated with the cronstedtite of Cornwall:

Analyses of greenalite, etc.

	Greenalite, Steiger.			Cornwall, Field.
	1.	2.	3.	
SiO_2	30.08	30.49	38.00	31.72
Fe_2O_3	34.85	23.52	8.40	18.51
FeO	25.72	36.92	46.56	39.46
H_2O	9.35	9.07	7.04	11.02
	100.00	100.00	100.00	100.71

Field's mineral and the greenalite No. 2 are very similar, and approach in composition a hydrated compound of the garnet type, $Fe'''_2Fe''_3(SiO_4)_3.3H_2O$. The third greenalite analysis, however, is of an almost entirely ferrous compound, a hydrous metasilicate approaching the formula $FeSiO_3.aq$. It is evident that the absolutely definite silicate is yet to be identified.

In the analyses cited the soluble green granules formed from 48 to 82.5 per cent of the entire greenalite rock, which, according to Leith, represents a marine sediment analogous to glauconite. From this silicate, by leaching, the hydrous hematites of the Mesabi district were concentrated; but the reactions proposed by Leith to account, first, for the greenalite and, later, for its decomposition are largely hypothetical. Iron, in solution as carbonate, was probably brought into the ocean by waters from the land, and precipitated as ferric hydroxide. The latter compound, partly or wholly reduced to the ferrous state by organic matter derived from marine vegetation, then combined with silica, of which an excess, now represented by chert, was also present. These processes are possible, and the explanation thus offered to account for the iron-bearing rocks is probable enough to be provisionally held, at least until something better is offered. We know that ferruginous sediments are now forming in the ocean; we know that chert, in many cases, is of organic origin; and these facts are consistent with the suppositions summarized above.

At a number of European localities iron ores are found which consist partly of silicates. One of these, thuringite, is a member of the

[a] See Leith, op. cit., p. 246. Discussion by F. W. Clarke.
[b] Phil. Mag., 5th ser., vol. 5, p. 52, 1878.

chlorite group; but another chloritic mineral, chamosite, which occurs associated with magnetite, limonite, or hematite in oolitic aggregations, is more definitely an ore of iron. Its composition, as determined by C. Schmidt [a] on Swiss material, and by E. R. Zalinski [b] on Thuringian specimens, is represented by the empirical formula $3FeO.Al_2O_3.2SiO_2.3H_2O$. The much rarer mineral cronstedtite has probably the same formula, with ferric oxide in place of alumina; and it differs from greenalite, as represented by the second analysis of the latter, in containing one less molecule of silica. Berthierine, from Hayanges, near Metz, is essentially a mixture of chamosite and magnetite,[c] and forms a valuable ore.

These silicates all undergo alteration with great ease, yielding oxides or hydroxides of iron. In most cases the ores containing them are oolitic, and form beds of sedimentary origin.[d] In this respect they resemble glauconite and greenalite, with which, chemically, they are so closely allied. How they were formed is uncertain, and different authorities interpret the evidence differently. The latest writer, E. R. Zalinski,[e] regards thuringite and chamosite as secondary products, derived by alteration from earlier sediments at the bottom of the Lower Silurian sea. Whatever the final conclusion may be, it seems clear that glauconite, chamosite, and greenalite, and possibly other allied silicates, were all formed by similar reactions, different local conditions having determined which product should appear.[f]

GYPSUM.

The occurrence of gypsum as a sedimentary rock has already been partially considered.[g] It may form on a large scale during the concentration of oceanic and other natural brines, and it is sometimes deposited from solution in fresh waters. Acid waters of volcanic

[a] Zeitschr. Kryst. Min., vol. 11, p. 601, 1886.

[b] Neues Jahrb., Beil. Bd. 19, p. 40, 1904.

[c] See A. Lacroix, Minéralogie de la France, vol. 1, p. 401, for this and other French occurrences.

[d] On the ores, locally known as "minette," of Luxemburg and Lorraine, see Bleicher, Bull. Soc. indust. de l'Est, 1894; L. Hoffman, Verhandl. Naturhist. Ver. preuss. Rheinland, etc., vol. 55, p. 109, 1898; H. Ansel, Zeitschr. prakt. Geol., 1901, p. 81; and L. van Werveke, idem, p. 396. On the Thuringian ores see H. Loretz, Jahrb. K. preuss. geol. Landesanstalt, 1884, p. 120. Much other literature is cited in the memoirs mentioned here.

[e] Neues Jahrb., Beil. Bd. 19, p. 79, 1904. Zalinski gives a good summary of the various theories which have been framed in order to account for these ores.

[f] In addition to the literature already cited, the following American reports on iron ores are worth noticing: W. B. Phillips, Iron Making in Alabama, a bulletin issued by the Alabama Geol. Survey in 1898. S. W. McCallie, Bull. No. 10-A, Geol. Survey Georgia, 1900, on the brown iron ores of that State. H. B. C. Nitze, Bull. No. 1, North Carolina Geol. Survey, 1893. F. L. Nason, Report on Iron Ores, Missouri Geol. Survey, 1892. Rept. of Progress F, Second Geol. Survey Pennsylvania, 1878, on the ores of the Juniata Valley. E. T. Dumble, Reports on the iron-ore district of East Texas: Second Ann. Rept. Texas Geol. Survey, 1891. The most exhaustive general treatise is R. Beck's great monograph, Die Geschichte des Eisens.

[g] *See ante*, pp. 173–185.

origin,[a] or derived from the oxidation of pyrite, by acting upon limestones, also produce gypsum. Its appearance as an accessory mineral in dolomitization is due to double decomposition between limestone and solutions containing magnesium sulphate; and other sulphates may act in a similar way. L. Jowa,[b] for example, prepared crystals of selenite by acting upon chalk with a solution of ferrous sulphate. Gypsum formed by reactions of this order, however, is commonly dissolved by the waters which assist in the process, and is carried away to be diffused or deposited elsewhere. As an important rock gypsum is generally a saline residue. Its formation in the first instance is probably oftener due to the action of oxidizing pyrite upon lime-bearing rocks than to any other cause.[c]

NATIVE SULPHUR.

Native sulphur is a frequent companion of gypsum, and this, too, may be produced in several ways. It is known as a volcanic sublimate, and is a product of reactions between sulphur dioxide and hydrogen sulphide. It is also formed by the incomplete combustion of hydrogen sulphide, probably in accordance with the equation $2H_2S+O_2=2H_2O+2S$.[d] According to Becker, who studied the phenomena at Sulphur Bank, California, the oxidation of H_2S to H_2SO_4 develops 201,500 calories. The oxidation to H_2O+S develops only 59,100 calories. Hence, where oxygen is in excess, as at the surface, hydrogen sulphide is completely oxidized, and sulphuric acid is formed. A short distance below the surface oxygen is deficient, and then sulphur is liberated. Probably, however, the actual conditions are more complex. Sulphur dioxide must be produced to some extent and that reacts with the hydrogen sulphide to form sulphur also. At all events, sulphuric acid and free sulphur both occur at Sulphur Bank, and in accordance with the conditions imposed by theory. The deposition of sulphur at the Rabbit Hole mines, Nevada, is also ascribed by G. I. Adams[e] to solfataric activity.

Sulphur deposits are common around mineral springs, being due to the imperfect oxidation of hydrogen sulphide; and the latter compound may be generated, either by the action of acid waters upon sulphides, or through the reduction of sulphates, such as gypsum,

[a] J. W. Dawson (Acadian Geology, p. 262, 1891) attributes the formation of gypsum in Nova Scotia to the action of sulphuric acid, derived from volcanic sources, on limestones.

[b] Ann. Soc. géol. Belg., vol. 23, p. cxxviii, 1896.

[c] For data upon American gypsum see G. P. Grimsley, Geol. Survey Michigan, vol. 9, pt. 2, 1904; Grimsley and E. H. S. Bailey, Univ. Geol. Survey Kansas, vol. 5, 1899; C. R. Keyes, Iowa Geol. Survey, vol. 3, pp. 257–304; F. J. H. Merrill, Bull. New York State Mus., vol. 3, No. 11, 1893. Bull. U. S. Geol. Survey No. 223, 1904, by G. I. Adams and others, describes the gypsum deposits of the United States.

[d] See G. F. Becker, Mon. U. S. Geol. Survey, vol. 13, p. 254, 1888; and J. Habermann, Zeitschr. anorg. Chemie, vol. 38, 1904, p. 101.

[e] Bull. U. S. Geol. Survey No. 225, p. 497, 1904.

by micro-organisms.[a] The interpretation of any given locality for sulphur is not easy, for different conditions reign in different places. In one deposit the evidence of thermal reduction may be clear, while elsewhere some other process is seen to have been operative. The most famous of all sulphur deposits is that near Girgenti, in Sicily, and this has been variously interpreted. Gypsum, sulphur, celestite, and aragonite are here intimately associated, in what is evidently a sedimentary formation not far removed from a center of great volcanic activity. The sulphur, therefore, has been regarded by some writers as volcanic, by others as a product of nonvolcanic agencies, and the conditions are such that either supposition can be strongly supported. Sicily abounds in solfataras, and in springs charged with hydrogen sulphide; and these may well have brought the sulphur from volcanic sources far below the surface. Its deposition, in that case, is due to the decomposition of hydrogen sulphide, which has taken place under aqueous rather than igneous conditions; and this view, with differences in detail, has been adopted by various authorities.[b] A. von Lasaulx,[c] for example, has argued that the sulphur was deposited from waters containing hydrogen sulphide and calcium carbonate during concentration in fresh-water basins; and G. Spezia[d] has developed a similar argument more fully. In order to account for the association of sulphur and gypsum without assuming the derivation of one from the other, Spezia cites an observation of A. Béchamp,[e] who found that when hydrogen sulphide was passed into water containing suspended calcium carbonate the latter was partly decomposed and calcium hydrosulphide was formed. This experiment was repeated by Spezia,[f] but with fragments of marble and under a pressure of six atmospheres. The solution thus obtained was found to contain a sulphide, and upon evaporation to small bulk at ordinary temperatures it deposited microscopic crystals of calcite, sulphur, and gypsum. By a reaction of this kind, between the sedimentary limestones and the ascending sulphureted waters, the observed association of minerals may have been produced. Wherever such waters act slowly upon limestones free sulphur with gypsum is likely to be formed.[g] It must be observed, however, that

[a] See especially E. Planchud, Compt. Rend., vol. 84, p. 235, 1877; vol. 95, p. 1363. 1882. Also A. Etard and L. Olivier, idem, vol. 95, p. 846, 1882.

[b] R. Travaglia (Bol. Com. geol., 1889, p. 110), however, regards the Sicilian sulphur as having been formed through the reduction of gypsum by organic matter, the remains of marine animals.

[c] Neues Jahrb., 1879, p. 490.

[d] Sull' origine del solfo nei giacimenti solfiferi della Sicilia, Torino, 1892. The theories relative to the origin of Sicilian sulphur are exhaustively summed up and discussed in this memoir. Several Italian works, cited by Spezia, I have not been able to consult.

[e] Ann. chim. phys., 4th ser., vol. 16, p. 234, 1869.

[f] Op. cit., p. 119.

[g] Other examples are given by R. Brauns, Chemische Mineralogie, p. 366. L. Dieulafait (Compt. Rend., vol. 97, p. 51, 1883) has suggested that polysulphides of calcium and strontium may assist in the formation of sulphur deposits.

the partial oxidation of hydrogen sulphide in presence of limestone would also produce the same association of substances. It is interesting to note that in a large crystal of gypsum from Cianciana, H. Sjögren[a] found a fluid inclusion which yielded liquid enough for analysis. Its composition resembled that of sea water, and the cavity also contained hydrogen sulphide.

The considerable deposits of sulphur found in western Texas are also associated with gypsum, and with waters which contain hydrogen sulphide. Some waters from the sulphur beds are strongly acid, and E. M. Skeats[b] reports one water which carried 1,360 parts per million, or 79.08 grains per gallon, of free H_2SO_4. The deposits are associated with limestones, which are sometimes bituminous, and at some points, as described by Richardson, gypsum has evidently been formed by alteration of the carbonate. At Cove Creek, in Utah, sulphur occurs in great quantities as an impregnation of limestone and shale, and gypsum is also abundant.[c] So far as the sedimentary rocks are concerned, the association of limestone, gypsum, sulphur, and hydrogen sulphide seems to be quite general, although not absolutely invariable. The association of sulphur with petroleum or bituminous matter is also common.

CELESTITE.

Celestite, the sulphate of strontium, $SrSO_4$, is another mineral of the sedimentary rocks, which also occurs in Sicily with the gypsum and sulphur. It is one of the most characteristic minerals of the Sicilian deposits. In Monroe County, Michigan, according to E. H. Kraus and W. F. Hunt,[d] the celestite is found disseminated through dolomite, and the upper layer of the rock at the point especially studied contained over 14 per cent of the strontium compound. Below this layer there is a porous stratum, with cavities containing celestite and free sulphur. The latter is found in considerable quantities, and is evidently derived by reduction from the sulphate. Kraus[e] has also reported celestite as extensively disseminated through dolomitic limestone near Syracuse, New York. At Put-in-Bay, Lake Erie, the limestones contain disseminated celestite, and caverns exist which are lined with crystals of that mineral.[f]

[a] Bull. Geol. Inst. Upsala, vol. 1, No. 2, 1893. A similar inclusion was earlier described by O. Silvestri, Gazz. chim. ital., vol. 12, p. 9, 1882.

[b] Univ. Texas Mineral Survey, Bull. No. 2, 1902. See also G. B. Richardson, idem, Bull. No. 9, p. 68, 1904. The sulphur deposits of Louisiana are described by L. Baldacci, Il giacimento solfifero della Louisiana, Rome, 1906.

[c] See G. vom Rath, Neues Jahrb., 1884, pt. 1, p. 259. Vom Rath regards this deposit as of volcanic (or solfataric?) origin.

[d] Am. Jour. Sci., 4th ser., vol. 21, p. 237, 1906. See also W. H. Sherzer, idem, 3d ser., vol. 50, p. 246, 1895; and Geol. Survey Michigan, vol. 7, pt. 1, p. 208, 1900.

[e] Am. Jour. Sci., 4th ser., vol. 18, p. 30, 1904.

[f] Kraus, Am. Jour. Sci., 4th ser., vol. 19, p. 286, 1905.

The celestite here has evidently been leached out from the surrounding rocks and redeposited in the cavities. Although strontium sulphate is much less soluble than gypsum, it is more soluble than calcium carbonate, and therefore it may be dissolved away from the latter. In Transylvania, according to A. Koch,[a] celestite and barite occur together in bituminous limestone. H. Bauerman and C. Le Neve Foster[b] report celestite in a nummulitic limestone in Egypt, and the crystals sometimes inclose fossil remains. It also appears as filling the interior of fossil shells, especially the chambers of nautili. At Condorcet, in France, as described by Lachat, celestite is found associated with gypsum in limestone.[c] Examples of this kind might be multiplied almost indefinitely. Strontium and calcium are so nearly related chemically that their common association in rocks is something to be naturally expected.

BARITE.

Barite, the barium sulphate, $BaSO_4$, is closely akin mineralogically to celestite, but is more characteristically found in metalliferous veins than in bedded formations.[d] Its occurrence as a cement in sandstones has already been noticed,[e] and it has also been observed as a sintery or even stalactitic deposit from spring and mine waters.[f] P. P. Bedson[g] found barium to be present in notable amounts in an English colliery water; and T. Richardson[h] has described a deposit of barite from a similar solution. Like deposits from other English collieries have been reported by F. Clowes,[i] who analyzed samples containing from 81.37 to 93.35 per cent of $BaSO_4$. The pipes carrying water from the mines which yielded these sediments were often choked by them, the barium sulphate being rarely absent and frequently their chief constituent. At Doughty Springs, in Delta County, Colorado, according to W. P. Headden,[j] large masses of sinter have formed, consisting at some points of nearly pure barium sulphate, which at other points is mixed with minor to dominant quantities of calcium carbonate. Barytic sinters are also formed by a brine spring in a mine at Lautenthal, in the Hartz Mountains, and these have been carefully studied by G. Lattermann.[k] In this

[a] Min. pet. Mitth., vol. 9, p. 416, 1888.
[b] Quart. Jour. Geol. Soc., vol. 25, p. 40, 1869.
[c] Ann. mines, 7th ser., vol. 20, p. 557, 1881.
[d] See L. Dieulafait, Compt. Rend., vol. 97, p. 51, 1883.
[e] See *ante*, p. 461.
[f] For the distribution of barium in waters, etc., see R. Delkeskamp, Notizbl. Ver. Erdkunde, 4th ser., Heft 21, pp. 47–83, 1900. On the distribution of barium and strontium in sedimentary rocks, see L. Collot, Compt. Rend., vol. 141, p. 832, 1905.
[g] Jour. Soc. Chem. Ind., vol. 6, p. 712, 1887.
[h] Rept. Brit. Assoc., 1863, p. 54.
[i] Proc. Roy. Soc., vol. 46, p. 368, 1889.
[j] Proc. Colorado Sci. Soc., vol. 8, p. 1, 1905.
[k] *Jahrb.* K. preuss. geol. Landesanstalt, 1888, p. 259.

case they are precipitated by the mingling of the sulphate-bearing mine waters with the brine from the spring. Lattermann's analyses of the two waters, as stated by him in grams per liter, are as follows:

Analyses of spring and mine waters at Lautenthal.

	Spring.	Mine water.
$BaCl_2$	0.318	.....
$SrCl_2$	.899	.....
$CaCl_2$	10.120	1.515
$MgCl_2$	4.360	.023
NaCl	68.168	4.533
KCl	.458	.....
$MgSO_4$	.....	.652
$ZnSO_4$	.....	.015

The barytic deposits from these waters contain strontium, and appear in several forms—as stalactites, as mud, and as incrustations. Analyses of them by Fernandez and Bragard show the subjoined proportions of the two principal ingredients.[a]

Barium and strontium sulphates in deposits at Lautenthal.

	White stalactites.	Brown stalactites.	Mud.	Crusts.
$BaSO_4$	84.81	83.88	82.3	92.44
$SrSO_4$	12.04	8.64	13.4	4.32

Similar mixtures of the two sulphates intermediate between barite and celestite are well known in crystalline form, and calcium sulphate is often present also. A remarkable banded barite, from Pettis County, Missouri, described by C. Luedeking and H. A. Wheeler,[b] had the following composition:

Analysis of barite from Pettis County, Missouri.

$BaSO_4$	87.2
$SrSO_4$	10.9
$CaSO_4$	.2
$(NH_4)_2SO_4$	.2
H_2O	2.4
	100.9

The presence of an ammonium salt in such a mineral is most unusual.

Nearly or quite all of the occurrences of barite indicate that it is a mineral of aqueous origin. It may form as a direct deposit from waters, or as a precipitate when different waters commingle, or, as

[a] Complete analyses are given in the original memoir by Lattermann.

[b] Am. Jour. Sci., 3d ser., vol. 42, p. 495, 1891. The presence of ammonium salts was independently verified by tests in the laboratory of the United States Geological Survey.

C. W. Dickson [a] has shown, by a reaction between solutions of barium bicarbonate and gypsum. Barium sulphate is also produced, according to Dickson, when the bicarbonate solution is brought into contact with oxidizing pyrite; and its presence in limestones is attributed to a possible coincidence of the two reactions. The oxidizing pyrite is first instrumental in transforming calcium carbonate to sulphate, and the latter then undergoes double decomposition with the percolating barium solutions. The original source of the barium is in the feldspars and micas of the crystalline rocks, from which it is dissolved out during the ordinary process of weathering.

One very different occurrence of barite remains to be mentioned. In the Salem district of India T. H. Holland [b] found a remarkable network of veins consisting of quartz and barite, with about 70 per cent of the first mineral and 30 of the second. These veins are mostly in pyroxenic gneiss, and one cuts a dike of augite diorite, and Holland, for structural reasons, regarded the quartz-barite rock as a segregation from the original magma. This supposition, however, is chemically improbable. In a molten state quartz (or free silica) would react upon barium sulphate, to form a silicate and set sulphuric acid or sulphur dioxide free. Quartz and barite are magmatically incompatible.

FLUORITE.

Fluorite or fluor spar, calcium fluoride, CaF_2, is also a common mineral in dolomites and limestones,[c] and it is often associated with galena and zinc blende. Crystals of it are found in limestone geodes, where it has evidently been deposited from solution. In some cases it may have been formed by fluoride solutions percolating through and replacing limestone. Its commonest occurrence is as a filling of veins.[d]

---

[a] School of Mines Quart., vol. 23, p. 366, 1902.

[b] Rec. Geol. Survey, India, vol. 30, p. 236, 1897.

[c] See *ante*, p. 273, for an account of fluorite as a rock-forming mineral. Also p. 461 for fluorite as a cement in sandstones.

[d] For a description of the great fluor spar deposits in Kentucky and southern Illinois, see S. F. Emmons, Trans. Am. Inst. Min. Eng., vol. 21, p. 31, 1893; H. F. Bain, Bull. U. S. Geol. Survey No. 255, 1905; E. O. Ulrich and W. S. T. Smith, Prof. Paper U. S. Geol. Survey No. 36, 1905. On the fluor spar of San Roque, Cordoba, Argentina, see J. Valentin, Zeitschr. prakt. Geol., 1896, p. 104.

CHAPTER XIV.

METAMORPHIC ROCKS.

METAMORPHIC PROCESSES.

In its widest sense the adjective metamorphic may be applied to any rock which has undergone any sort of change. Practically, however, it is used to describe a well-defined class of rocks in which the transformation from an original form has been nearly complete. A slightly altered igneous or sedimentary rock is not commonly called metamorphic; neither is a mass of decomposition products so designated. The gneisses, the schists, quartzite, marble, and serpentine are the most familiar examples of metamorphism, and in each case an antecedent rock has been changed into a new rock by one or several among many different processes.

Some varieties of metamorphism are entirely physical or structural, and therefore will not be considered in this memoir. Metamorphoses which represent only a development of slaty or schistose structure are of this kind. In most cases, however, metamorphism is accompanied by chemical changes, which are indicated by the production of new minerals, and this sort of metamorphism concerns us now. It may be regional, when large areas are affected, or a phenomenon limited to a contact between two reacting rocks, but these distinctions are of little significance chemically. The chemical phases of the process are all that we need to consider at present.

The reactions involved in metamorphism are not difficult to classify. The following changes are probably the most important:

1. Molecular rearrangements, as in the process of uralitization, when a pyroxene rock is changed into one characterized by amphibole.

2. Metamorphism by hydration. The conversion of a peridotite or pyroxenite into serpentine is a case of this kind, although something more than simple hydration is involved in the change.

3. Metamorphism by dehydration. The change of limonite to hematite and of bauxite to emery are good examples. Alterations of this class, however, are often more profound than dehydration alone can account for, especially when they take place at high temperatures. Then the molecules of hydrous minerals may be broken down, as when serpentine breaks up into olivine and enstatite, or talc into a metasilicate and quartz.

4. Oxidations and reductions, which affect chiefly the iron oxides of the rocks. Ferrous compounds become ferric, and hematite, on the other hand, may be reduced to magnetite.

5. Changes other than hydration, produced by percolating solutions. Cementation is one process of this kind, and the change from sandstone to quartzite is a common example of it. In other cases the solutions effect chemical transformations, and develop new compounds. The dolomitization of limestone is a case in point.

6. Metamorphism by the action of gases and vapors, the so-called "mineralizing agents." This process generates new minerals within a rock, and introduces, like solutions, new constituents.

7. Metamorphism by igneous intrusions. This heading covers the changes due to the intrusion of molten matter into or between rock masses, whereby a class of "contact minerals" is formed.

Although this classification is simple, it is only superficially so. It is useful as a matter of convenience, but its application to concrete examples of metamorphism is not always easy. Two or more processes may operate simultaneously, or they may shade into one another, with all sorts of variations in detail due to variations in temperature and pressure. All of these considerations must be borne in mind in dealing with the actual phenomena of metamorphism. The ideal simplicity is not often found.

In the study of metamorphic phenomena the conceptions developed by C. R. Van Hise[a] are also helpful. Van Hise divides the lithosphere into two zones—an upper zone of katamorphism and a lower of anamorphism. The zone of katamorphism is furthermore subdivided into two belts—one the belt of weathering, the other that of cementation. These approximately concentric shells are characterized by definite chemical differences, which may be briefly summarized as follows:

The uppermost shell of all, the belt of weathering, extends from the surface of the ground to the level of the ground water, and its thickness is very variable. It is essentially the region of rock decomposition, and its reactions are mainly those of hydration, oxidation, absorption of carbonic acid with liberation of silica, and losses of material by leaching. It is also a region of low pressure, relatively low temperature, and great porosity. In it the complex silicates are broken down into simpler compounds, from which, within the belt, they are rarely regenerated.

The belt of cementation is that which contains the ground water. Its rocks are more or less porous and fractured, its temperature is still not high, but the pressure is great enough to play an important part in the reconsolidation of sedimentary material. It is, in short, the birthplace of such rocks as shales and sandstones. In the belt

[a] Treatise on metamorphism: Mon. U. S. Geol. Survey, vol. 47, 1904.

above it solution is a leading process, but here, in the accumulated ground water, redeposition rules. Hence its name, the belt of cementation.

In the zone of anamorphism, which lies below the region of the ground water, the rocks are no longer distinctly porous. The pressure above them tends to close up all pores and fractures. The temperature is also relatively high—that is, below the melting point of the rocks, but possibly above the critical temperature of water. Under these conditions the reactions of the upper zone are reversed. Instead of hydration, there is dehydration; reduction is more common than oxidation; carbonates are decomposed and silicates are regenerated. Pneumatolytic reactions are characteristic of this region, and so too are metasomatic changes. There is also a tendency to the development, under pressure, of the heavier and denser rock-forming minerals and of the species which contain constitutional water, fluorine, or boric oxide. Garnet, staurolite, muscovite, epidote, and tourmaline are, for examples, typical minerals of the metamorphic rocks.

According to C. R. Van Hise, the minerals of the upper zone are those which are formed with increase of volume and evolution of heat. In the lower zone, contraction and absorption of heat occur. These distinctions, of course, are general, not absolute, and should only be accepted in a broad way. They stand for prevailing tendencies, to which many exceptions are possible. Nor can the belts and zones be rigorously delimited, for they shade into and even interpenetrate one another. Material formed in the belt of weathering is covered up by sediments, and presently finds itself within the belt of cementation. Still later, covered more deeply, it may pass into the zone of anamorphism. So also, by erosion, a part of the anamorphic zone may be uncovered and brought within the realm of weathering. To all of these changes chemical changes correspond, so that the same mass of material can be metamorphosed, in opposite directions, over and over again. A clay becomes a shale; that is transformed into a schist or gneiss, and that again may pass back into clay. The phenomena of decomposition, of reconsolidation, and of recrystallization form parts of a cycle of changes which are recognized mainly by their interruptions. The definite products to which we give definite names represent temporary stoppages or periods of slow change in the progress of the cycle.

In both zones of the lithosphere water is the chief agent of chemical metamorphism. It is most abundant in the zone of katamorphism, where it acts mainly as a liquid and fills more or less completely the pore spaces of the rocks. In the zone of anamorphism water is much less abundant and operates in the subcapillary and intermolecular spaces, where, because of the higher temperatures, it

is probably present, at least for the most part, as vapor. At a depth of about 10 kilometers the critical temperature of water is likely to be reached, and its chemical activity should then be very high. The well-known corrosive action of superheated steam upon glass is an illustration of this point. Even when the water is still liquid, at temperatures of over 200°, it may form a fluid or pasty mass with some silicates, as was shown by C. Barus[a] in his experiments upon aqueo-igneous fusion.

In the zone of katamorphism the water is moving freely, percolating from place to place. In the lower zone its mobility must be much diminished, so that on a given particle of rock it acts for a longer time. It may appear in this zone, according to Van Hise, in three ways—as water held by buried sedimentaries, as water liberated from hydrous compounds by heat or pressure, and as magmatic water contained in igneous intrusions. But from whatever source it may be derived, its chemical functions are the same. It acts as a solvent upon practically all the rock-forming minerals; it therefore transfers matter slowly from point to point and in that way assists in bringing about recrystallization. In so doing the water is partly taken up into the molecules of new compounds, such as staurolite, epidote, mica, and tourmaline, of which it forms a constitutional part and from which it can only be expelled at temperatures approaching or even exceeding a red heat. Loosely combined water thus becomes firmly combined water and ceases for the time being to be further active. A reference back to the chapter upon rock-forming minerals will show how many syntheses have depended upon heating the constituent substances with water under pressure. The minerals thus formed are characteristic of the zone of anamorphism, even though they are not confined to it.

The sediments, as a rule, contain organic matter. When they reach, by burial, the high temperatures of this zone, the organic matter is decomposed, yielding free carbon, carbon dioxide, nitrogen, and water. The free carbon may appear in the metamorphosed rocks as amorphous particles or it may be recrystallized into graphite; the carbon dioxide may escape, working its way slowly upward, or it may be caught and inclosed within crystals of quartz or other minerals. Inclusions of this kind are common, and so also are inclusions of free carbon.

In this process of decomposition the organic matter of the sediments acts as a reducing agent, transforming ferric to ferrous compounds. When magnetite is thus formed from limonite, the reduction is partial, but when the iron compounds of a clay are metamorphosed into staurolite or tourmaline, the change from ferric to ferrous is nearly or quite complete. It must not be assumed, however,

[a] See ante, p. 244.

that organic matter is the only reducing agent during metamorphism. We have seen in a previous chapter that hydrogen may be either occluded in or generated from heated rocks,[a] and its activity as a reducer may be very great. But on this point, geologically speaking, there is little positive knowledge. We are compelled to deal, more or less, with reasonable inferences.

By the action of the heated waters much silica is liberated, which recrystallizes in part as quartz. Some of it, however, attacks the limestones of the buried sedimentaries, liberating carbon dioxide and forming silicates, such as wollastonite. When, however, a large mass of fairly pure limestone or dolomite reaches the anamorphic zone, it is recrystallized into marble. This change, and also the formation of dolomite, was considered in detail in the preceding chapter, where the subject was perhaps out of place. Some of the concomitant changes will be discussed later.

One great distinction between the two zones remains to be noted. In the belt of weathering the transfer of material from point to point. both by mechanical and by chemical means, is a conspicuous feature. In the belt of cementation the mechanical transfers become less prominent, but the moving waters carry much matter long distances in solution. In the zone of anamorphism the mechanical movements become relatively insignificant and the chemical changes are practically effected in place—that is, the chemical movements of matter within the lower zone are only through trifling distances, and the transformations are effected with material close at hand. The upper zone is, then, emphatically a zone of mobility; while the material of the lower zone, being under great pressure, is comparatively immovable. I speak now, of course, of certain kinds of movement; the motions of the earth's crust, its upheavals and depressions, the displacing influence of igneous intrusions, etc., are phenomena of a different order. Neither do I use the terms movable and immovable in any absolute sense, for they have only a relative meaning. The freedom of motion in the upper zone is vastly greater than in the lower; and because of that fact the phenomena of the two zones become strongly contrasted.

CLASSIFICATION.

The classification of the metamorphic rocks is not a simple matter. The criterion of structure is not sufficiently general, and that of genesis is too vague. We can not always determine the genesis of a given rock, and when we are able to do so, the result, for purposes of classification, may be unsatisfactory. A gneiss can be derived from an igneous rock or from one of sedimentary origin, the product being sensibly the same in both cases. It is possible, of course, to

[a] See *ante*, pp. 224–232, for the experiments of Tilden, Travers, Gautier, etc.

classify these rocks on the basis of their composition; but here again there are difficulties, even greater, perhaps, than those which becloud the classification of purely igneous material.[a] Quite dissimilar rocks may have very similar composition. In fact, no single classification covers all the ground; for the phenomena of nature do not arrange themselves in linear sequence. They form an irregular network of interlacing lines, with all manner of intersections and frequent disturbances.

Taking all of the difficulties into account, I prefer to study the metamorphic rocks, so far as may be practicable, with reference to the chemical processes which have governed their formation. I have already stated that several processes may take part in a single metamorphosis; but in many cases one process predominates. The conspicuous process, then, gives a basis for classifying our data, which need not, however, exclude other arrangements for other purposes. The method supplements, but does not supplant its rivals. For convenience we may also divide the metamorphic rocks into three classes, as follows: First, those derived from igneous rocks; second, those of sedimentary origin; third, rocks formed by contact reactions between the igneous and the sedimentary.

The metamorphism of the igneous rocks is commonly a deep-seated phenomenon; that is, its conspicuous examples are formed in the zone of anamorphism, or under anamorphic conditions. Leaving mechanical or structural changes out of consideration, its conspicuous feature is of the order of a molecular rearrangement; in other words, the older minerals are transformed into new species, sometimes by simple paramorphism and sometimes with transfer of material from one molecule to another. In general, as F. Becke[b] has shown, the rearrangements are attended by decrease of volume, the product of the change being denser than the original material. For example, in the special case chosen by Becke, the plagioclase and orthoclase of a rock containing a little water were transformed into a mixture of albite, zoisite, muscovite, and quartz, the volume reduction being in the ratio of 547.1: 462.5, a loss of over 15 per cent. A number of similar condensations are cited by U. Grubenmann;[c] and although the calculations are necessarily crude, they are none

[a] U. Grubenmann (Die Kristallinen Schiefer, Berlin, vol. 1, 1904; vol. 2, 1907) has attempted to form a chemical classification of the schists, which resembles Osann's discussion of the igneous rocks.

[b] Neues Jahrb., 1896, pt. 2, p. 182.

[c] Die Kristallinen Schiefer, pp. 34–38, Berlin, 1904. Grubenmann's data are taken from a paper by F. Becke, in Compt. Rend. IX Cong. géol. internat., p. 553, 1903. See also F. Loewinson-Lessing, Studien über die Eruptivgesteine: Compt. Rend. VII Cong. géol. internat., St. Petersburg, 1897.

the less conclusive.[a] The fact that there are exceptions to the rule does not destroy its general validity.

From a mineralogical point of view, the more noteworthy metamorphoses within the igneous rocks may be classified under the following headings:

1. Change of pyroxene to amphibole.
2. Change of feldspar to mica.
3. Change of feldspar to zoisite.
4. Change of feldspar to scapolite.
5. Formation of epidote.
6. Formation of garnet.
7. Change of hornblende to chlorite.
8. Segregation of albite from plagioclase.
9. Formation of serpentine.
10. Alteration of ilmenite.

This schedule is by no means exhaustive, for many other minor changes are to be observed in the metamorphism of igneous rocks. Every primary mineral that they contain may give rise to secondary species, and these represent all orders of transformation from the slightest modification to the complete molecular breaking down which is seen in the processes of weathering. Decompositions, however, are not now under discussion; we are dealing with the phenomena of recrystallization within rock masses, excepting, of course, the case of serpentinization, which is a process of a different order.

URALITIZATION.

The alteration of pyroxene rocks into hornblende rocks is one of the best-established metamorphoses. The hornblende thus produced, when fibrous, is known as uralite, and the change is called uralitization.[b] It is often accompanied and complicated by other changes, such as the formation of epidote or zoisite, and it may also be coincident with the development of a schistose structure. Mediosilicic and subsilicic rocks, like gabbro and diabase, are thus metamorphosed into amphibolite or hornblende schist. An excellent example of this sort of change was found by J. J. H. Teall[c] in a dike at Scourie, Sutherlandshire, Scotland, where a dolerite had changed, first into a massive hornblende-bearing rock and later into a schist. The following

[a] For a tabulation of the volume changes attending the alteration of minerals, see C. R. Van Hise, Treatise on metamorphism: Mon. U. S. Geol. Survey, vol. 47, pp. 397–408, 1904.

[b] See G. H. Williams, Bull. U. S. Geol. Survey No. 62, p. 52, 1890, for a full discussion of this subject, accompanied by abundant references to literature. See also L. Duparc and T. Hornung, Compt. Rend., vol. 139, p. 223, 1904, on a theory of uralitization.

[c] British Petrography, p. 198, 1888; also in Quart. Jour. Geol. Soc., vol. 41, p. 137, 1885.

analyses will serve to illustrate the character of the changes thus produced:

Analyses of pyroxene rocks before and after alteration.

Aa. The plagioclase-pyroxene rock of the Scourie dike.
Ab. The derived hornblende schist. Analyses by Teall, loc cit.
Ba. Pyroxene from the center of a crystal, Templeton, Canada.
Bb. Intermediate portion of the same crystal.
Bc. Hornblende forming the rim of the crystal. Analyses B by B. J. Harrington, Geol. Survey Canada, Rec. of Progress, 1877–78, p. 21 G.
Ca. Diallage from a gabbro, Transvaal, South Africa.
Cb. Uralite from alteration of the diallage. Analyses C by P. Dahms, Neues Jahrb., Beil. Bd. 7, p. 99, 1891.

	Aa.	Ab.	Ba.	Bb.	Bc.	Ca.	Cb.
SiO_2	47.45	49.78	50.87	50.90	52.82	53.53	52.73
Al_2O_3	14.83	13.13	4.57	4.82	3.22	3.12	4.70
Fe_2O_3	2.47	4.35	.97	1.74	2.07	5.09	5.26
FeO	14.71	11.71	1.96	1.36	2.71	13.54	10.21
MnO	.....	.....	.15	.15	.28	.....	.....
MgO	5.00	5.40	15.37	15.27	19.04	18.77	12.59
CaO	8.87	8.92	24.44	24.39	15.39	6.19	12.58
Na_2O	2.97	2.39	.22	.08	.90	.5	.23
K_2O	.99	1.05	.50	.15	.69	.20	.06
H_2O	1.00	1.14	[a] 1.44	[a] 1.20	[a] 2.40	.....	1.54
TiO_2	1.47	2.22	.....	.....	.....	.....	.....
CO_2	.36	.10	.....	.....	.....	.....	.....
	100.12	100.19	100.49	100.06	99.52	101.01	99.90
Specific gravity	3.10	3.10	3.181	3.205	3.003	.....	.....

[a] Loss on ignition.

That the change from pyroxene to uralite or amphibole is something more than a paramorphism these few analyses clearly show. In A there has been oxidation of ferrous to ferric iron, in B a loss of lime, and in C a loss of magnesia. In many cases uralitization is accompanied by a separation of magnetite,[a] and the lime removed reappears as calcite. Epidote is also a common product during the process, which must vary with variations in the composition of the altering rock and of the individual pyroxene. Augite thus yields hornblende or actinolite; diopside may change into tremolite, and from the soda pyroxenes the aluminous glaucophane may be derived. The composition of the pyroxene is reflected in that of its derivative, but the augite-hornblende change is the most common.[b] Between the original igneous rock and the secondary amphibolites, there are all possible intermediate gradations, from incipient change to complete transformation.

GLAUCOPHANE SCHISTS.

The glaucophane schists differ from the amphibolites in that they contain the soda amphibole instead of hornblende. H. S. Wash-

[a] See G. Rose, Zeitschr. Deutsch. geol. Gesell., vol. 16, p. 6, 1864; E. Svedmark, Neues Jahrb., 1877, p. 99.

[b] See discussion of the change by C. H. Gordon, Am. Geologist, vol. 34, p. 40, 1904.

ington[a] divides these rocks into three classes, namely, epidote-glaucophane schist, mica-glaucophane schist, and quartz-glaucophane schist; but he also recognizes the fact that there are many transitional varieties. W. H. Melville,[b] for example, has described a garnet-glaucophane schist from Mount Diablo, California; and A. Wichmann[c] an epidote-mica-glaucophane schist from Celebes. A zoisite-glaucophane schist from Sulphur Bank, California, is also mentioned by G. F. Becker.[d] It consists chiefly of glaucophane and zoisite, but quartz, albite, sphene, and muscovite are also present. Another rock from Piedmont, containing glaucophane, garnet, hornblende, epidote, mica, and sphene, described by T. G. Bonney,[e] is called a glaucophane eclogite.

Genetically, the glaucophane rocks differ widely. Some of them are undoubtedly derived from mediosilicic or subsilicic igneous rocks; others from sedimentaries. In Greece, for example, according to R. Lepsius,[f] some glaucophane schists represent gabbro, and others are metamorphosed Cretaceous shales. The epidote-glaucophane schist of Anglesey, Wales, described by J. F. Blake,[g] was originally a diorite, and in this rock alterations of glaucophane to chlorite occur. In Piedmont, as described by S. Franchi,[h] there are glaucophane rocks associated with amphibolite, both having been derived from diabase. In Japan, according to B. Koto,[i] the metamorphosed material was formerly a diabase tuff, and the glaucophane was derived from diallage. By further alteration the glaucophane sometimes passes into crocidolite. And on Angel Island, in San Francisco Bay, California, a glaucophane schist studied by F. L. Ransome[j] has been developed from a radiolarian chert, probably by contact metamorphism. In many cases the genesis of these rocks is obscure; but Washington suggests that the epidote-glaucophane schists represent originally gabbroid magmas, while the quartz-glaucophane schists are metamorphosed quartzites or quartzose shales. For convenience, differences of origin will be disregarded here and the analyses of this group of rocks are tabulated together, as follows:

---

[a] Jour. Sci., 4th ser., vol. 11, p. 35, 1901. This memoir is a very complete summary of our knowledge of these rocks. It contains many analyses, and abundant reference to literature. See also K. Oebbeke, Zeitschr. Deutsch. geol. Gesell., vol. 38, p. 634, 1886; Grubenmann, Rosenbusch "Festschrift," 1906; E. H. Nutter and W. B. Barber, Am. J., vol. 10, p. 738, 1902; and J. P. Smith, Proc. Am. Phil. Soc., vol. 45, p. 183, 1906. The last two papers relate to the glaucophane rocks of California.

[b] Bull. Geol. Soc. America, vol. 2, p. 413, 1890.

[c] Neues Jahrb., 1893, pt. 2, p. 176.

[d] U. S. Geol. Survey, vol. 13, p. 104, 1888.

[e] Geol. Mag., vol. 7, p. 1, 1887.

[f] Geologie von Attika, pp. 102, 133, Berlin, 1893.

[g] Geol. Mag., 1888, p. 125.

[h] Boll. geol. ital., vol. 26, p. 192, 1895.

[i] Jour. Sci. Coll. Japan, vol. 1, p. 85, 1886.

[j] Bull. Dept. Geol., Univ. California, vol. 1, p. 211.

Analyses of amphibolites and glaucophane schists.[a]

A. Amphibolite dike, Palmer Center, Massachusetts.

B. Amphibolite bed, Palmer Center. Analyses A and B by W. F. Hillebrand, Bull. U. S. Geol. Survey No. 228, p. 36, 1904.

C. Amphibolite, Crystal Falls district, Michigan. Described by H. L. Smyth, Mon. U. S. Geol. Survey, vol. 36, p. 397, 1899. Analysis by H. N. Stokes. Probably derived from a diabase or basalt. Contains hornblende, plagioclase, biotite, and quartz, with a little rutile and magnetite.

D. Epidote-glaucophane schist, Mount Diablo, California. Analysis by W. H. Melville, Bull. Geol. Soc. America, vol. 2, p. 413, 1890. Contains garnets. Possibly derived from shale.

E. Garnet-glaucophane schist, Bandon, Oregon. Analyzed and described by H. S. Washington, Am. Jour. Sci., 4th ser., vol. 11, p. 35, 1901. Contains glaucophane, epidote or zoisite, garnet, and white mica.

F. Zoisite-glaucophane schist, Sulphur Bank, California. Analysis by Melville. Described by G. F. Becker, Mon. U. S. Geol. Survey, vol. 13, p. 104, 1888.

G. Mica-glaucophane schist, Island of Syra, Greece. Analyzed and described by Washington, loc. cit.

H. Quartz-glaucophane schist, Fourmile Creek, Coos County, Oregon. Analyzed and described by Washington. Contains quartz, glaucophane, chlorite, muscovite, and garnet.

	A.	B.	C.	D.	E.	F.	G.	H.
SiO_2	49.57	51.25	50.36	47.84	49.15	49.68	58.26	82.53
Al_2O_3	14.23	16.53	13.26	16.88	15.87	13.60	16.21	6.88
Fe_2O_3	3.95	1.81	6.30	4.99	4.10	1.86	3.44	.59
FeO	8.01	7.67	9.34	5.56	7.58	8.61	4.63	4.11
MgO	6.14	5.87	5.55	7.89	7.53	6.26	4.99	1.86
CaO	10.19	9.32	7.85	11.15	9.06	10.97	3.82	.68
Na_2O	3.06	3.35	2.11	3.20	3.59	3.09	5.36	1.21
K_2O	.95	.78	1.14	.46	.54	.12	.39	1.24
H_2O-	.14	.19	1.55	.17	.16	3.84	.22	.07
H_2O+	1.33	1.26	1.55	1.81	1.07		.98	1.35
TiO_2	2.03	1.84	1.77	.....	1.19	1.31	1.37	.....
CO_2	trace	.....	.....	.....	none	.....	.....	.....
P_2O_5	.21	.31	.20	.14	.....	.21	.....	.....
S	.02	(?)	.....	.....	.....	.....	.....	.....
V_2O_3	.04	undet.	.....	.....	.....	.....	.....	.....
Cr_2O_3	trace	trace	.....	.....	.....	.....	.....	.....
NiO	trace	trace	.....	.....	.....	.....	.....	.....
MnO	.27	.28	trace	.56	trace	.04	trace	trace
SrO	trace?	(?)	.....	.....	.....	.....	.....	.....
BaO	trace	(?)	.....	.....	.....	.....	.....	.....
Li_2O	trace	trace?	.....	.....	.....	.....	.....	.....
	100.14	100.46	99.59	100.65	99.84	99.59	99.67	100.52

[a] A number of amphibolites from Massachusetts are described by B. K. Emerson in Mon. U. S. Geol. Survey, vol. 29, 1898. For analyses see also Bull. No. 228, pp. 34, 35, 1904. These amphibolites are regarded as derived from argillaceous limestones. L. Hezner (Min. pet. Mitth., vol. 22, p. 505, 1903) gives several analyses of amphibolites from the Tyrol. See also a table of analyses in Rosenbusch, Elemente der Gesteinslehre, p. 532. See also, on amphibolite, F. Becke, Min. pet. Mitth., vol. 4, p. 285, 1882; and J. A. Ippen, Mitth. Naturwiss. Ver. Steiermark, 1892, p. 328. Ippen describes "normal amphibolite," and also zoisite-, pyroxene-, feldspar-, and garnet-amphibolite.

SERICITIZATION.

The conversion of feldspar into muscovite is one of the commonest processes of metamorphism, whether of igneous or of sedimentary rocks. In many instances the mica produced is the compact or fibrous variety known as sericite, which, in former times, was generally mistaken for talc. The so-called talcose schists of the earlier geologists have proved in most cases to be not talcose, but sericitic.[a] The identity of sericite with muscovite was finally established by H. Las-

[a] See G. H. Williams, Bull. U. S. Geol. Survey No. 62, pp. 60–62, 1890, for historical details.

peyres[a] in 1880, and since then its occurrence has been repeatedly investigated. The alteration is most conspicuous in regions where the dynamic metamorphism has been most intense—high temperature, the chemical activity of water, and mechanical stress all working together to bring it about. Any feldspathic rock may undergo sericitization, but orthoclase rocks furnish the most typical examples. The derivation of sericitic schists and gneisses from granite, quartz porphyry, and diabase, and also from arkose and clay slate, has been repeatedly observed.[b]

Sericite is commonly derived from orthoclase or microcline, as suggested above, but may be generated from plagioclase feldspars also, the reactions in the two cases being different. In the formation of muscovite from orthoclase the necessary potassium is already present; but in order to produce muscovite from plagioclase a replacement of sodium by extraneous potassium is required. In either case the reaction which takes place may be represented by more than one equation, although it must be admitted that the formulation is purely hypothetical. Until the processes shall have been experimentally reproduced the equations will remain doubtful.

First, orthoclase may be transformed to muscovite by the addition of colloidal alumina equivalent in composition to diaspore, thus:

$$KAlSi_3O_8+2AlO.OH=KH_2Al_3Si_3O_{12}.$$

This reaction is very simple chemically, but geologically improbable. It requires the presence of solutions containing much alumina, and it is not easy to see whence they could be derived. It suggests, however, a possible relation between the formation of sericite and the alteration to bauxite, a possibility which deserves further investigation.

A second, more probable, and even simpler reaction is the following:

$$3KAlSi_3O_8+H_2O=KH_2Al_3Si_3O_{12}+K_2SiO_3+5SiO_2.$$

In this case water alone, acting on orthoclase at a high temperature and under pressure, forms muscovite, free silica, and potassium silicate, the last compound being leached away. The liberated silica may be partly removed in solution, or it can recrystallize as quartz, a mineral which almost invariably accompanies sericite in metamorphic rocks. Furthermore, the analyses of sericite usually show a

[a] Zeitschr. Kryst. Min., vol. 4, p. 245, 1879.

[b] See J. G. Lehmann, Untersuchungen über die Entstehung der altkrystallinischen Schiefergesteine, Bonn, 1884; A. Wichmann, Verhandl. Natur. Ver. preuss. Rheinl. u. Westfalens, vol. 34, p. 1, 1877; A. von Groddeck, Neues Jahrb., Beil. Bd. 2, p. 72, 1883; C. Schmidt, idem, Beil. Bd. 4, p. 428, 1886, and C. Benedicks, Bull. Geol. Inst. Upsala, vol. 7, p. 278, 1904–5. In Jahrb. K. preuss. geol. Landesanstalt, 1885, pt. 1, Von Groddeck describes the derivation of sericite schists from clay slates.

small excess of silica over that contained in normal muscovite. A similar reaction with albite should yield the soda mica paragonite.

A modified form of the last reaction is in common use, which involves the introduction into the equation of carbonated water, as follows:

$$3KAlSi_3O_8+H_2O+CO_2=KH_2Al_3Si_3O_{12}+K_2CO_3+6SiO_2.$$

In this case, however, the potassium carbonate would dissolve one molecule of the liberated silica, forming potassium silicate as before. The CO_3 would thus be set free again, ready to assist in further alterations of feldspar. Since carbonated waters, both of meteoric and of deep-seated origin, are very abundant, it is quite possible that this regenerative process is really in operation. If so, the reaction should be more vigorous than when water acts alone. The frequent association of calcite with sericite is an indication that carbonated solutions have helped to produce the change.[a] If the alteration took place in presence of both albite and orthoclase, the potassium silicate would probably react upon the former mineral or upon its incipient decomposition products, so that muscovite only, without paragonite, would be formed. In the development of muscovite from plagioclase the presence of potassium-bearing solutions, which exchange alkalies with the sodium compounds, must be assumed.

OTHER ALTERATIONS OF FELDSPAR.

Apart from the phenomenon of sericitization, the plagioclase feldspars undergo a number of other metasomatic changes, whose records are preserved in the metamorphic rocks. Under the influence of carbonated waters the anorthite molecule may be decomposed, with the formation of calcite and the separation of silica. In this case the albite remains as a finely granular aggregate, the so-called "albite mosaic," which outwardly resembles quartz and with which quartz is commonly associated.[b] When the lime of the anorthite is not completely removed, it goes to form other silicates, such as epidote, zoisite, or actinolite. The latter reactions are by far the most frequent.

The alteration of plagioclase to zoisite is exceedingly common, but it is rarely complete. As a rule mixtures of zoisite and feldspar remain, which were once thought to represent a distinct mineral species and to which the name saussurite was given. The mechanism of the change is obscure, but it is probably a double decomposition between the albite and anorthite molecules, brought about by the intervention of water. The feldspars, however, vary in composition: the water may contain other reacting substances in solution, and so

[a] Compare W. Lindgren, Trans. Am. Inst. Min. Eng., vol. 30, p. 608, 1900, in reference to the association with calcite.

[b] *See* K. A. Lossen, Jahrb. K. preuss. geol. Landesanstalt, 1884, pp. 525–530. See also *G. H. Williams*, Bull. U. S. Geol. Survey No. 62, p. 60, 1890.

the reactions are complicated in many ways. The following equation, which is plausible but not proved, represents the transformation of plagioclase into a mixture of zoisite, paragonite, and quartz, a mixture that sometimes occurs:

$$\underset{\text{Albite.}}{NaAlSi_3O_8}+\underset{\text{Anorthite.}}{4CaAl_2Si_2O_8}+\underset{\text{Water.}}{2H_2O}=$$

$$\underset{\text{Zoisite.}}{2Ca_2HAl_3Si_3O_{13}}+\underset{\text{Paragonite.}}{H_2NaAl_3Si_3O_{12}}+\underset{\text{Quartz.}}{2SiO_2}.$$

When orthoclase molecules are present, muscovite will be formed; that is, sericitization and saussuritization may go on together. With albite in excess, the saussurite mixture appears, but that again is variable. It may contain epidote, scapolite, or garnet; according to A. Cathrein,[a] saussurite is sometimes derived from garnet; and all of these minerals may undergo complete or partial alterations into other compounds.

Saussuritic rocks have been described by many petrographers, and there is abundant literature covering them. F. Becke[b] reports a saussurite gabbro from Greece, consisting of saussurite and diallage, the latter partly altered to hornblende. P. Michael[c] describes another saussurite gabbro from Germany, in which garnet is also present, derived from diallage and partly altered to serpentine. Another saussurite gabbro from Sturgeon Falls, Michigan, was carefully studied by G. H. Williams.[d] It contained saussurite derived from the complete alteration of plagioclase; diallage; hornblende, partly secondary; and a little ilmenite, with some calcite, quartz, and a colorless chlorite. By further alteration this rock passes into a silvery schist, consisting mainly of chlorite, calcite, and secondary quartz, but with some feldspars remaining, partly sericitized. A rock designated as a zoisite-hornblende diorite, from the Bradshaw Mountains, Arizona, described by T. A. Jaggar and C. Palache,[e] contained 47 per cent of zoisite, derived from plagioclase, 17 per cent of actinolite, and smaller amounts of quartz, orthoclase, albite, chlorite, kaolin, and magnetite. The following analyses of zoisite rocks were made in the laboratory of the United States Geological Survey:

Analyses of zoisite rocks.

A. Sturgeon Falls gabbro, freshest form.
B. The same, altered form.
C. Silvery schist derived from Sturgeon Falls gabbro. Analyses A, B, and C by R. B. Riggs.
D. Zoisite-hornblende diorite, Bradshaw Mountains. Analysis by George Steiger.

[a] Zeitschr. Kryst. Min., vol. 10, p. 444, 1885.
[b] Min. pet. Mitth., vol. 1, p. 247, 1878.
[c] Neues Jahrb., 1881, pt. 1, p. 32.
[d] Bull. U. S. Geol. Survey No. 62, pp. 67–76, 1890. Another saussuritized gabbro from the Upper Quinnesec Falls is described on pp. 102–104. On pp. 58–60 Williams gives a general discussion of this form of alteration, with historical details. See also A. Cathrein, Zeitschr. Kryst. Min., vol. 7, p. 234, 1883.
[e] Geologic Atlas U. S., folio 126, pp. 4–5, U. S. Geol. Survey, 1905.

	A.	B.	C.	D.
SiO_2	51.46	38.05	45.70	45.73
Al_2O_3	14.35	24.73	16.53	19.45
Fe_2O_3	3.90	5.65	4.63	5.28
FeO	5.28	6.08	3.89	3.18
MgO	9.54	11.58	9.37	6.24
CaO	9.08	1.25	4.28	13.86
Na_2O	2.92	2.54	.55	.64
K_2O	.24	1.94	3.82	.32
H_2O-	3.30	7.53	4.70	1.57
H_2O+				3.56
TiO_2	.....	.....	.....	.23
CO_2	.20	.93	5.95	.28
P_2O_5	.....	.....	.....	trace
	100.27	100.28	99.62	100.34

The sericitization of C is shown by the loss of sodium and great increase of potassium. The Sturgeon Falls series is especially instructive as illustrating the occurrence of several alterations, partly simultaneous and partly successive, in the same rock formation. Saussurite, sericite, and uralite are all represented.

The transformation of plagioclase into scapolite is by no means rare, but the nature of the process is not always easy to trace. Scapolite is often formed by contact reactions between igneous rocks and limestones, as well as by processes resembling that of saussuritization. For the latter change, which is the one to be properly considered now, the classical example is furnished by the spotted gabbro of Oedegaarden. In this case a plagioclase-pyroxene rock has been altered into a scapolite-hornblende mixture, a rock which, according to Fouqué and Lévy,[a] is retransformed on fusion into pyroxene and labradorite. The alteration, then, is reversible and one which ought to be studied quantitatively. The change from plagioclase to scapolite, as investigated by J. W. Judd,[b] is probably due to the action of sodium chloride, which exists in solution in minute inclusions within the original rock. It must be noted, however, that the Oedegaarden gabbro is in contact with veins of chlorapatite, from which some of the chlorine essential to the formation of scapolite may have been derived.

In any case, the conversion of plagioclase to scapolite requires the addition of new material. The scapolites, as shown by G. Tschermak,[c] are mixtures of two end species—meionite, $Ca_4Al_6Si_6O_{25}$, and marialite, $Na_4Al_3Si_9O_{24}Cl$. These may be derived from anorthite and albite in accordance with the following empirical equations:

$$3CaAl_2Si_2O_8+CaO=Ca_4Al_6Si_6O_{25}.$$
$$3NaAlSi_3O_8+NaCl=Na_4Al_3Si_9O_{24}Cl.$$

[a] Bull. Soc. min., vol. 2, p. 113, 1879.

[b] Min. Mag., vol. 8, p. 186, 1889. See also A. Michel Lévy, Bull. Soc. min., vol. 1, pp. 43, 78, 1878. A similar rock from Bamle, Norway, containing sphene, amphibole, and wernerite, is also described. Other noteworthy memoirs on the Scandinavian rocks of this class are by A. E. Törnebohm and E. Svedmark, Geol. Fören. Förhandl., vol. 6, p. 192, 1882; vol. 7, p. 293, 1884.

[c] See the section on scapolite in Chapter X, p. 337, ante.

In order to change an ordinary plagioclase into an ordinary scapolite, then, lime and sodium chloride must be taken up, and it is clear that these reagents may come from quite dissimilar sources. The change of pyroxene to amphibole may furnish the lime in some cases; apatite may yield it, with chlorine, in others; but no general rule, no exclusive group of reactions, can be postulated. The widely different conditions under which scapolitization may take place have been well summarized by A. Lacroix,[a] whose two memoirs upon the subject are most exhaustive.

On the epidotization of plagioclase feldspar there is an abundant literature.[b] Since epidote and zoisite are closely analogous in chemical structure, the process of alteration must resemble that of saussuritization, from which it differs in detail. Epidote contains iron, typical zoisite does not; and that element seems commonly to be furnished by hornblende or pyroxene. Feldspar, augite, hornblende, and biotite all alter into epidote; and so, too, in some cases apparently, does chlorite. The derivation of epidote from chlorite has been observed by G. F. Becker[c] in the rocks of the Comstock lode, and although the observation is questioned by some authorities, it is not disproved. Chemically, it is not improbable; but usually the two minerals, chlorite and epidote, form simultaneously from a common parent. In the rocks of Leadville, W. Cross[d] found epidote derived from orthoclase, plagioclase, biotite, and hornblende. G. H. Williams[e] observed its formation as a contact rim between feldspar and hornblende in the gabbro-diorite near Baltimore, and F. D. Chester[f] described similar occurrences in Delaware. In some of Chester's specimens the epidote contained cores of feldspar.

---

[a] Bull. Soc. min., vol. 12, p. 83, 1889; vol. 14, p. 16, 1891. Lacroix states that wernerite gneisses are very common. Lacroix and C. Baret (idem, vol. 10, p. 288, 1887) describe a wernerite pyroxenite. Wernerite, it will be remembered, is one of the intermediate scapolites. See also H. Wulf, Min. pet. Mitth., vol. 8, p. 213, 1887, on a scapolite-augite gneiss from Herero Land, Africa; and F. Becke, idem, vol. 4, p. 285, 1882, on similar rocks from Lower Austria. Scapolite amphibolites are described by O. Mügge, Neues Jahrb., Beil. Bd. 4, p. 583, 1886, from Masai Land; E. Dathe, Jahrb. K. preuss. geol. Landesanstalt, 1884, p. lxxvi, from Germany; and F. D. Adams and A. C. Lawson, Canadian Rec. Sci., vol. 3, p. 185, 1888, from Canada. Adams and Lawson also describe two scapolite diorites. The Alaskan scapolite rocks collected by J. E. Spurr (Am. Jour. Sci., 4th ser., vol. 10, p. 310, 1900) are regarded by him as primary and not metamorphic. The scapolite rocks of northern New Jersey, briefly described by F. L. Nason (Ann. Rept. State Geologist, 1890, p. 33), occur as dikes in crystalline limestone, and may have been formed by contact metamorphism. C. H. Smyth (Am. Jour. Sci., 4th ser., vol. 1, p. 273, 1896) has described the transformation of a gabbro into a gneiss containing pyroxene, hornblende, feldspar, and scapolite.

[b] See A. Cathrein, Zeitschr. Kryst. Min., vol. 7, p. 247, 1883; A. Schenck, Verhandl. Naturhist. Ver. preuss. Rheinl. u. Westfalens, vol. 41, p. 53, 1884; and G. H. Williams, Bull. U. S. Geol. Survey No. 62, p. 56, 1890, for summaries of the earlier observations.

[c] Mon. U. S. Geol. Survey vol. 3, 1882, pp. 75, 76, 213. Criticised by Williams, loc cit., and H. Rosenbusch, Neues Jahrb., 1884, pt. 2, Ref., p. 189.

[d] Mon. U. S. Geol. Survey, vol. 12, pp. 341, 357, 1886.

[e] Bull. U. S. Geol. Survey No. 28, p. 31, 1886.

[f] Bull. U. S. Geol. Survey No. 59, p. 35, 1890.

Epidotization, then, represents a reaction between the feldspars and the ferromagnesian minerals of a rock, and when it is complete a mixture of quartz and epidote remains. Such a rock is known as epidosite, and its formation has been many times recorded. J. Lemberg[a] describes an alteration of this kind from augite porphyry; and Schenck[b] reports the derivation of epidosite from diabase. Unakite is a remarkable rock consisting of rose-colored orthoclase and green epidote, first described by F. H. Bradley[c] from western North Carolina. It has since been found near Milam's Gap, Virginia. According to W. C. Phalen,[d] who has studied this locality, the unakite is derived from a hypersthene akerite, or quartz-diallage syenite, and it contains, in addition to the two principal minerals, some quartz, iron oxides, zircon, and apatite. It passes into epidosite by further alteration. Epidote-quartz rocks from New Jersey have also been briefly described by L. G. Westgate.[e] Here, as at Milam's Gap, the epidote is thought to be derived from pyroxene.

Garnet is a common mineral of the metamorphic rocks, and is often indicated in their nomenclature. Garnet gneiss, garnet-mica schist, garnet hornfels, and garnet-olivine rock are good examples. In these rocks, however, garnet is commonly an accessory mineral rather than a main constituent. On the other hand, rocks are known consisting chiefly or largely of garnet, and one of these, eclogite, has been the subject of many investigations.[f]

Eclogite is essentially a rock composed of red garnet, with a green pyroxene, omphacite. It may also contain, subordinately, hornblende, quartz, zoisite, kyanite, and muscovite, with zircon, apatite, sphene, epidote, magnetite, pyrite, and pyrrhotite as minor accessories.[g] According to J. A. Ippen,[h] the Styrian eclogites shade into omphacite rock on one side and into garnet rock on the other; that is, either mineral may predominate and give its own character to the mixture. The eclogites of the lower Loire, according to A. Lacroix,[i] sometimes contain feldspar formed as a secondary mineral during the uralitization of highly aluminous pyroxenes. Lacroix shows that these rocks are products of dynamometamorphism. The crushing and fracturing of the original rocks has facilitated the circulation of the waters to which their alterations are due.

---

[a] Zeitschr. Deutsch. geol. Gesell., vol. 29, p. 498, 1877.

[b] Verhandl. Naturhist. Ver. preuss. Rheinl. u. Westfalens, vol. 41, p. 53, 1884.

[c] Am. Jour. Sci., 3d ser., vol. 7, p. 519, 1874.

[d] Misc. Coll. Smithsonian Inst., Quart. Issue, vol. 1, p. 301, 1904.

[e] Ann. Rept. State Geologist New Jersey, 1895, p. 30.

[f] See Zirkel's Lehrbuch der Petrographie, 2d ed., vol. 3, p. 369, for many references. The papers by Lohmann and Hezner, cited on the next page, also contain bibliographies.

[g] See R. von Drasche, Jahrb. K.-k. geol. Reichsanstalt, 1871, Min. Mitth., p. 85, and E. R. Riess, Min. pet. Mitth., vol. 1, pp. 165, 181, 1878.

[h] Mitth. Naturwiss. Ver. Steiermark, 1892, p. 328.

[i] *Bull. Soc. sci. nat. de l'Ouest de la France*, vol. 1, p. 81, 1891.

L. Hezner,[a] who studied eclogite from the Oetzthal, in the Tyrolese Alps, regards it as a metamorphic derivative of gabbroid rocks. By further metamorphosis it passes into amphibolite, the eclogite being the deeper-seated phase. The garnet, he thinks, was formed by a reaction between plagioclase and olivine, or perhaps between plagioclase and pyroxene. The omphacite alters into hornblende, and so, too, does the garnet, but later. First eclogite, then garnet amphibolite, then amphibolite, is the order of these allied rocks. Plagioclase also appears, as observed by Lacroix, among the products of alteration, together with epidote, chlorite, magnetite, zoisite, and biotite.

The following analyses of epidote and garnet rocks are from the memoirs already cited:

Analyses of epidote and garnet rocks.

A, B. Epidosite derived from diabase, upper Ruhrthal, Germany. Analyzed and described by Schenck.
C. Unakite, Milam's Gap, Virginia. Analysis by Phalen.
D. Eclogite, Sulzthal, Styria.
E. Eclogite, Burgstein, Styria. Analyses D and E by Hezner.

	A.	B.	C.	D.	E.
SiO_2	42.13	50.26	58.32	44.06	46.26
Al_2O_3	19.21	13.72	15.77	17.63	14.45
Fe_2O_3	11.19	9.18	6.56	3.40	4.41
FeO	2.52	2.97	.89	9.96	5.82
MgO	.41	2.20	.09	7.19	11.99
CaO	21.42	16.30	11.68	11.58	11.66
Na_2O	.29	.71	.32	2.92	2.45
K_2O	.08	1.12	4.01	.91	1.51
H_2O-	2.39	1.88	1.73	.12	.....
H_2O+				.17	1.10
TiO_2	1.40	1.60	(a)	2.29	.28
ZrO_2	.....	.....	trace	.....	.....
P_2O_5	.08	.39	.48	.....	.....
MnO	.....	.....	.13	.....	.....
FeS_2	.25	.26	.....	.....	.....
	101.37	100.59	99.98	100.23	99.93

[a] Not separated from alumina.

CHLORITIZATION.

In chloritization we find a stage of metamorphism which is nearly akin to decomposition. Any ferromagnesian mineral may alter into chloritic material, and that, by further change, may break down into a mixture of carbonates, limonite, and quartz. The gabbros of Michigan, described by G. H. Williams,[b] show clearly the successive steps of uralitization and chloritization, the final product often being a chloritic schist. Diabase and diorite are often chloritized, gaining

[a] Min. pet. Mitth., vol. 22, pp. 437, 505, 1903. See also E. Joukowsky, Compt. Rend., vol. 133, p. 1312, 1901, on alterations of eclogite from Lac Cornu. Other valuable papers upon eclogite are by P. Lohmann, Neues Jahrb., 1884, pt. 1, p. 83; and F. Becke, Min. pet. Mitth., vol. 4, pp. 317–322, 1882. Eclogites from California have been described by R. S. Holway, Jour. Geol., vol. 12, p. 344, 1904, and J. P. Smith, Proc. Am. Phil. Soc., vol. 45, p. 183, 1906.

[b] Bull. *U. S. Geol. Survey No.* 62, 1890.

thereby the green color to which the common appellation "greenstone" is due. In diabase the chloritic substance is commonly derived from augite, calcite and quartz being formed at the same time. The alumina needed to produce the chlorite is probably furnished by feldspar.[a] Under anhydrous conditions, as we have already seen, a reaction between feldspars and ferromagnesian minerals yields garnet; possibly the formation of chlorite is similar, but effected in presence of water. The alterability of garnet into chlorite emphasizes this suggestion.

The chlorites developed in rocks of igneous origin are rarely definite species. They are, as a rule, variable mixtures, of which many have received specific names. Diabantite and prochlorite, both ferriferous, are perhaps the most common. Because of this vagueness, Rosenbusch prefers to use the collective term "chloritic substance" in describing the products of this class. The general names "viridite" and "chloropite" have also been proposed; the one by H. Vogelsang, the other by C. W. Gümbel.

CONSTITUTIONAL FORMULÆ.

Although it is not yet possible to write positive reactions for all of the alterations that we have so far been considering, some of them are partly elucidated by the structural formulæ of several minerals. A number of these species are curiously alike in constitution, and with them other minerals, not specifically studied in this chapter, may also be compared. Taking the tripled formulæ of orthoclase and albite, which are suggested by the alteration of albite into marialite, the following system of formulæ can be developed:[b]

Orthoclase	$Al_3(Si_3O_8)_3K_3$.
Albite	$Al_3(Si_3O_8)_3Na_3$.
Marialite	$Al_2(Si_3O_8)_3Na_4(AlCl)$.
Nephelite	$Al_3(SiO_4)_3Na_3$.
Paragonite	$Al_3(SiO_4)_3NaH_2$.
Muscovite	$Al_3(SiO_4)_3KH_2$.
Topaz	$Al_3(SiO_4)_3(AlF_2)_3$.
Andalusite	$Al_3(SiO_4)_3(AlO)_3$
Biotite	$Al_2(SiO_4)_3Mg_2KH$.
Garnet	$Al_2(SiO_4)_3Ca_3$.
Prehnite	$Al_2(SiO_4)_3Ca_2H_2$.
Zoisite	$Al_2(SiO_4)_3Ca_2(AlOH)$.

Epidote resembles zoisite, but with iron partly replacing aluminum, and similar replacements exist in the garnet group. Anorthite,

[a] See G. W. Hawes, Am. Jour. Sci., 3d ser., vol. 9, pp. 190, 454, 1875. Also A. Schenck, Verhandl. Naturhist. Ver. preuss. Rheinl. u. Westfalens, vol. 41, p. 74, 1884. Chloritization is fully discussed by Rosenbusch, in his Mikroskopische Physiographie der massigen Gesteine, 2d ed., vol. 2, pp. 180–184.

[b] See F. W. Clarke, Bull. U. S. Geol. Survey No. 125, 1895, for an extended discussion of these formulæ.

meionite, and the normal chlorites are representable by formulæ of the same type, but slightly more complex, and many other aluminosilicates follow the same rule.

From these formulæ, which are identical in type, the observed alterations becomes intelligible. One species changes into another by replacement of atoms, the typical structures—the nuclei, so to speak—remaining undisturbed. When the trisilicate feldspars alter into orthosilicates, silica is liberated; but the other changes are simpler. For example, nephelite, topaz, and andalusite all change easily into muscovite; members of the garnet group can form epidote, biotite, or the normal chlorites, and so on. Pyroxenes and amphiboles, however, are compounds of different structure from those given in the foregoing table, and the mechanism of their alterations is not so clear. Some of the phenomena are easily understood; others still await interpretation. It is possible to write empirical equations in all cases, but they have slender value. A correlation between molecular constitution and the observed changes must be established before the chemistry of metamorphism can be completely described.

TALC AND SERPENTINE.

When distinctively magnesian silicates undergo hydrous metamorphism, which happens chiefly in the belt of weathering, the product is likely to be either talc or serpentine. Other hydrous silicates may be formed also, together with carbonates and the hydroxide, brucite; but the two species just named are the most important. I speak now, of course, with reference to alterations in place; such a rock as dolomite falls in quite another category.

A typical production of serpentine is from rocks containing olivine; and the probable reaction is as follows:

$$\underset{\text{Olivine.}}{2Mg_2SiO_4}+2H_2O+CO_2=\underset{\text{Serpentine.}}{Mg_3H_4Si_2O_9}+\underset{\text{Magnesite.}}{MgCO_3}.$$

Peridotites are especially liable to this sort of alteration, and many serpentine rocks can be assigned this origin.[a] The well-known Lizard serpentine of Cornwall, for instance, has been shown by T. G. Bonney[b] to be an altered lherzolite.

Pyroxenes, also, are often converted into serpentine. The equation, in the case of diopside, is perhaps as follows:

$$\underset{\text{Diopside.}}{3MgCaSi_2O_6}+3CO_2+2H_2O=\underset{\text{Serpentine.}}{Mg_3H_4Si_2O_9}+\underset{\text{Calcite.}}{3CaCO_3}+\underset{\text{Quartz.}}{4SiO_2}.$$

[a] See F. Sandberger, Neues Jahrb., 1866, p. 385; idem, 1867, p. 176. G. Tschermak, Sitzungsb. Akad. Wien, vol. 56, p. 261, 1867. E. Weinschenk, Abhandl. K. bayer. Akad., Math. phys. Klasse, vol. 18, p. 651. J. Lemberg, Zeitschr. Deutsch. geol. Gesell., vol. 27, p. 531, 1875. B. Weigand, Jahrb. K.-k. geol. Reichsanstalt, 1875, Min. Mitth., p. 183. F. Zirkel (Lehrbuch der Petrographie, 2d ed., vol. 3, p. 404) gives an extensive bibliography of serpentine.

[b] Quart. Jour. Geol. Soc., vol. 33, p. 884, 1877.

This reaction is sustained by the fact that serpentine rocks often contain quartz and calcite. When serpentine is formed from gabbro or pyroxenite the change is probably of this kind, although it may have been preceded by uralitization of the pyroxene. Serpentines derived from amphibolites have been repeatedly described.[a]

In short, serpentine may be formed from any silicate which happens to be rich in magnesia, such as olivine, pyroxene, amphibole, garnet,[b] or chondrodite.[c] It also appears to be produced by the action of percolating magnesian waters upon nonmagnesian minerals, such as feldspars, and possibly, even, quartz.[d] J. Lemberg[e] has shown that solutions of magnesium carbonate will attack oligoclase, replacing sodium by magnesium to a considerable extent; but alterations of this sort are not very common. Many reported changes of minerals to talc or serpentine have been erroneous, for compact muscovite is easily mistaken for them. A pseudomorphous mineral should be called serpentine or steatite only after thorough chemical and optical examination. The mere fact that a mineral is green, soft, compact, and soapy to the touch is not enough to establish its character.

In many localities serpentine is associated with dolomite or dolomitic limestone. In these cases the mineral has been derived from magnesian silicates, which were first formed within the limestone by metamorphic processes. In the limestones of Westchester County, New York, according to J. D. Dana,[f] the parent minerals were tremolite or actinolite. It is possible also that some dolomite itself may have become silicated, yielding serpentine by alteration of the compounds thus formed. Similar views are advanced by S. F. Emmons[g] with reference to serpentines found near Leadville, Colorado. The serpentine of Montville, New Jersey, which is also in dolomite, was shown by G. P. Merrill[h] to be derived from pyroxene, and the same conclusion was reached regarding the ophiolite or ophicalcite of Warren County, New York.[i] The "verde-antique" marbles are familiar illustrations of this commingling of carbonates with serpentine. A quite different blending of serpentine with other minerals is that described by me from Stephens County, Washington.[j] This mix-

[a] B. K. Emerson (Mon. U. S. Geol. Survey, vol. 29, p. 114, 1898) assigns this origin to the serpentines of the Connecticut Valley. An Australian amphibolite serpentine has also been described by J. B. Jaquet, Rec. Geol. Survey New South Wales, vol. 5, p. 21, 1896–1898.

[b] See A. Schrauf, Zeitschr. Kryst. Min., vol. 6, p. 321, 1882.

[c] See J. D. Dana, Am. Jour. Sci., 3d ser., vol. 8, p. 371 1874, on serpentine pseudomorphs from the Tilly Foster mine.

[d] See G. F. Becker, Mon. U. S. Geol. Survey, vol. 13, pp. 108–128, 1888.

[e] Zeitschr. Deutsch. geol. Gesell., vol. 22, p. 345, 1870; vol. 24, p. 255, 1872.

[f] Am. Jour. Sci., 3d ser., vol. 20, p. 30, 1880.

[g] Mon. U. S. Geol. Survey, vol. 12, p. 282, 1886.

[h] Proc. U. S. Nat. Mus., vol. 11, p. 105, 1888.

[i] Am. Jour. Sci. 3d ser., vol. 20, p. 30, 1880.

[j] Bull. U. S. Geol. Survey No. 262, p. 69, 1905.

ture was apparently a normal serpentine; but upon analysis it was found to contain only 20 per cent of that species, with 60 per cent of brucite, 14 per cent of chlorite, and 5 per cent of hydromagnesite. Its origin, so far as I am aware, has not been determined.

In the quicksilver region of California G. F. Becker[a] found serpentines which had been decomposed by solfataric agencies until only the silica remained. Similar reductions of serpentine to opal, chalcedony, and quartz have been recorded by A. Lacroix.[b] The acids of volcanic fumaroles had removed the bases of the serpentine in the form of soluble sulphates.

From what has been said so far it is evident that serpentine originates in various different ways. Some serpentine is merely altered peridotite, pyroxenite, or gabbro; and some of it is derived from dolomite or other sedimentary rocks. Indeed, the sedimentary origin of serpentine has had many strong advocates, the chief among them having been the late T. Sterry Hunt.[c] L. Dieulafait[d] also has argued that the serpentines of Corsica are true sedimentary rocks. There is, in fact, no valid reason why siliceous magnesian sediments, precipitated or detrital, should not form beds of serpentine; but the rock is commonly a metamorphosed eruptive, or else the result of a secondary metamorphism of siliceous limestones. In both of these generally recognized modes of formation the chemical processes are the same. The same magnesian silicates are altered in the same way, irrespective of their igneous, metamorphic, or sedimentary origin.

Serpentine is a basic orthosilicate, talc an acid metasilicate. The former alters easily, and is readily decomposed; the latter is one of the least alterable and therefore among the most stable, under aqueous conditions, of mineral species. Both minerals are decomposed by heat, but differently. Serpentine breaks up into enstatite and olivine; talc into enstatite or anthophyllite and quartz, water being eliminated in both cases. These decompositions may be written thus:

$$Mg_3H_4Si_2O_9 = Mg_2SiO_4 + MgSiO_3 + 2H_2O.$$
$$Mg_3H_2Si_4O_{12} = 3MgSiO_3 + SiO_2 + H_2O.$$

Talc, like serpentine, may originate in different ways; but its commonest derivation seems to be by the alteration of amphiboles or pyroxenes. C. H. Smyth,[e] who studied the talc of St. Lawrence County, New York, found it to be derived in that region from enstatite and tremolite, according to the following reactions:

[a] Mon. U. S. Geol. Survey, vol. 13, p. 127, 1888.
[b] Compt. Rend., vol. 124, p. 513, 1887.
[c] Mineral Physiology and Physiography, pp. 434–516, 1886. Hunt cites a large amount of evidence from Italian sources.
[d] Compt. Rend., vol. 91, p. 1000, 1880.
[e] School of Mines Quart., vol. 17, p. 333, 1896.

$$4MgSiO_3+H_2O+CO_2=Mg_3H_2Si_4O_{12}+MgCO_3.$$
$$Mg_3CaSi_4O_{12}+H_2O+CO_2=Mg_3H_2Si_4O_{12}+CaCO_3.$$

These reactions are much alike, and resemble those which are recognized in the formation of serpentine. In fact, many serpentines contain admixtures of talc, and when the original rocks are at all aluminous, chlorites also may appear. Soapstone or steatite is impure, massive talc.

According to Smyth, the St. Lawrence County talc is found associated with crystalline limestones. J. H. Pratt[a] found the deposits of North Carolina to be in connection with marble, and capped by quartzite. In the same region pyrophyllite occurs, a hydrous silicate of aluminum, $HAlSi_2O_6$, which much resembles talc and may be mistaken for it. The talc itself appeared to be derived from tremolite. Smyth assumes that a siliceous limestone was first laid down, which became, by metamorphism, a tremolite-enstatite schist. The latter, by hydration, became talc. This, however, is not the only way in which steatite has been formed. A. Gurlt[b] reports its formation from dolomite along contacts with amphibolite; and C. H. Hitchcock[c] regards the steatites of New Hampshire as alterations of what was originally igneous matter. Pseudomorphs of talc after many minerals have been described, but not all of the reports are authentic. The warning given under serpentine may well be recalled here. Pseudomorphs of talc after quartz, however, seem to be well known.[d] Much work needs to be done in order to determine the origin of soapstone generally.

The following analyses represent talcose and serpentinous rocks of varied characters.

Analyses of talcose and serpentinous rocks.

A. Dark-green serpentine, Rowe, Massachusetts. Described by B. K. Emerson in Mon. U. S. Geol. Survey, vol. 29, 1898. Analysis by G. Steiger.

B. Serpentine, Greenville, California. Described by J. S. Diller in Bull. U. S. Geol. Survey No. 150, p. 372, 1898. Derived mainly from pyroxene. Analysis by W. H. Melville.

C. Serpentine, Sulphur Bank, California. Described by G. F. Becker in Mon. U. S. Geol. Survey, vol. 13, 1888. Analysis by Melville.

D. Serpentine derived from pyroxenite, Mount Diablo, California. Analyzed and described by Melville, Bull. Geol. Soc. America, vol. 2, p. 403, 1890.

E. Serpentinous rock of unusual composition; also from Mount Diablo. Analyzed and described by Melville, loc. cit.

F. "Ovenstone" from Canton Valais, Switzerland. Described by T. G. Bonney (Geol. Mag., 1897, p. 110) as a stage in the alteration of serpentine. The original rock was perhaps a basalt or dolerite. Analysis by Emily Aston.

G. Brucite serpentine, Stevens County, Washington. Described by F. W. Clarke, Bull. U. S. Geol. Survey No. 262, p. 69, 1905. Analysis by G. Steiger.

H. Steatite, Griqualand West, South Africa. Described by E. Cohen, Neues Jahrb., 1887, pt. 1, p. 119. Analysis by Van Riesen.

---

[a] North Carolina Geol. Survey, Econ. Paper No. 3, 1900.

[b] Sitzungsb. Niederrhein. Gesell., Bonn, 1865, p. 126.

[c] Jour. Geol., vol. 4, p. 58, 1896.

[d] E. Weinschenk, Zeitschr. Kryst. Min., vol. 14, p. 305, 1888.

	A.	B.	C.	D.	E.	F.	G.	H.
SiO_2	40.42	39.14	41.86	40.50	30.98	44.94	13.08	63.29
Al_2O_3	1.86	2.08	.69	.78	1.04	5.47	1.63	1.24
Fe_2O_3	2.75	4.27	.....	4.01	4.88	1.75	1.25	.16
FeO	4.27	2.04	4.15	2.04	2.01	3.47	.19	4.68
MgO	35.95	39.84	38.63	37.43	38.44	25.57	56.44	27.13
CaO	.66	trace	.....	.39	.22	8.76	.33	trace
Na_2O	.16	.....	.....	.28	.40	.....	none	.....
K_2O		.....	.....	.16	.16	.....	none	.....
H_2O-	.21	12.70	14.16	2.81	.39	.35	.85	4.40
H_2O+	10.51			10.94	20.43	5.40	23.94	
TiO_2	none	.....	.....	.....	.....	.....	.....	.....
CO_2	1.44	.....	.....	.....	.....	1.22	2.03	.....
P_2O_5	trace	.....	.....	trace	trace	.....	.....	.....
Cr_2O_3	.28	.....	.24	.41	.34	trace	.....	.....
NiO	.53	.....	trace	.11	.....	2.90	.....	.....
CoO	trace	.....	.....	.....	.....	.....	.....	.....
MnO	trace	.....	.20	.13	.42	trace	.....	.....
SO_3	trace	.....	.....	.....	.44	.....	.....	.....
FeS_2	.43	.....	.....	.....	.....	.....	.....	.....
Chromite	.....	.11	.....	.....	.....	.....	.....	.....
	99.47	100.18	99.93	99.99	100.15	99.83	99.74	100.90

The presence of chromium and nickel in several of these rocks is a good indication of a relationship with the pyroxenites and peridotites. Chromite and nickel ores are very generally associated with these magnesian eruptives.

QUARTZITE.

The processes which operate in the metamorphism of sedimentary rocks are partly identical with those which we have just been considering. This fact has already been indicated in several connections. A shale, or sandstone, contains fragments of minerals, usually more or less weathered, and these undergo the normal changes. Feldspar becomes sericite, hornblende alters to chlorite, and so on, exactly as in the metamorphoses of igneous material. The substances affected are the same, and so are the reactions. The formation of serpentine from pyroxene, for example, is, as I have already said, the same process, whether it is effected upon the pyroxene of a gabbro or upon the pyroxene developed by contact metamorphism in a crystalline limestone.

There is, however, another set of changes which are peculiar to the sedimentaries. These rocks contain decomposition products, such as kaolinite, hydroxides of aluminum and iron, etc., which give rise to a different group of reactions, and these generate another class of mineral species. Kyanite, andalusite, sillimanite, staurolite, and dumortierite are among the minerals thus developed in schists, which once were shales. These minerals, again, can alter into mica, so that a mica schist may represent the outcome of a series of transformations, the intermediate products having disappeared.

Just as the sedimentary rocks shade into one another, so, too, do their metamorphic derivatives, but with even greater complexity. For the metamorphosed rocks contain not only the original minerals

of the sediments, but also the new products formed by alteration. Perhaps the simplest of these changes is that of a sandstone into a quartzite, which, in the first instance, is brought about by infiltration of silica. In this way the interstices of the sandstone are filled up and a porous rock is transformed into a compact one. But as sandstones are not all sand, so quartzites are not all silica. A micaceous sandstone yields a micaceous quartzite; a feldspathic sandstone may form either an arkose gneiss, or by sericitization it can become a mica schist; and between these different rocks there are all manner of gradations. These changes, moreover, are often complicated by structural modifications due to dynamic agencies; so that from similar sandstones very different rocks can be derived. In some cases the nature and order of the changes can be traced; in others they seem to be hopelessly obscure.[a]

The following analyses of quartzite and quartz schist are useful for comparison with the analyses of sandstones given in the preceding chapter.

Analyses of quartzite and quartz schist.

A. Dark vitreous quartzite, Pigeon Point, Minnesota. Contains quartz, with a little feldspar, chlorite, mica, and magnetite. Described by W. S. Bayley, Bull. U. S. Geol. Survey No. 109, 1893. Analysis by R. B. Riggs.

B. Red vitreous quartzite, Pigeon Point. Bayley and Riggs as above.

C. Quartzite, South Mountain, Pennsylvania. Described by F. Bascom, Bull. U. S. Geol. Survey No. 136, 1896. Analysis by F. A. Genth, on p. 34.

D. Quartz schist, near Stevenson station, Maryland. Contains quartz, muscovite, tourmaline, microcline, zircon, and iron stains. Described by Bayley, Bull. U. S. Geol. Survey No. 150, p. 302, 1898. Analysis by E. A. Schneider.

	A.	B.	C.	D.
SiO_2	74.22	83.69	[a] 92.00	91.65
Al_2O_3	10.61	7.50	4.21	1.59
Fe_2O_3	7.45	1.81	1.80	3.57
FeO	.85	.38	.....	.21
MgO	1.48	.35	.....	.17
CaO	.56	.39	.04	none
Na_2O	2.12	2.46	.16	.07
K_2O	1.08	2.61	1.16	1.93
H_2O	[b] 1.79	.72	[b] .96	.60
TiO_2	.16	trace?	.14	.13
P_2O_5	.....	.....	.21	none
MnO	none	trace	.....	trace
	100.32	99.91	100.68	99.92

[a] 84.13 per cent quartz, 7.87 per cent combined silica. [b] Loss on ignition.

METAMORPHOSED SHALES.

Shales, slates, phyllites, and mica schists form a continuous series of rocks which can be derived from clay, mud, or silt by progressive dehydration and crystallization. Some mica schists, of course, are

[a] For a full discussion relative to the formation of quartzite, see C. R. Van Hise, Treatise on metamorphism: Mon. U. S. Geol. Survey, vol. 47, pp. 865–880, 1904. See also R. D. Irving, Bull. U. S. Geol. Survey No. 8, p. 48, 1884; and Am. Jour. Sci., 3d ser., vol. 25, p. 401, 1883. Important papers on the subject have been written by C. Lossen, *Zeitschr. Deutsch. geol. Gesell.*, vol. 19, p. 615, 1867, and W. J. Sollas, Sci. Proc. Roy. *Dublin Soc.*, vol. 7, p. 169, 1892.

traceable back to igneous rocks, but they fall outside of the present category. In order to study the development of schists from shales or clays, we must consider what compounds the latter contain, capable of dehydration, and what are produced in this class of metamorphoses.

This ground has already been partly covered in the two preceding chapters. The final products of rock decomposition, apart from those that are removed in solution, are hydroxides of iron and aluminum; free silica, anhydrous or opaline; and hydrous silicates of iron, aluminum, and magnesium. The simple hydroxides offer the least difficulties in the way of interpretation. The iron compounds yield hematite, which is a common mineral in the metamorphic schists, and which, in presence of organic matter, may be reduced to magnetite.[a] The aluminum hydroxides may furnish diaspore, if the dehydration is partial, or corundum when the reaction is complete. Opaline silica loses water and becomes converted into quartz. These changes are of the simplest character, but it is not certain that they always take place. It is possible that the colloidal silica may react upon the colloidal hydroxides, and form silicates anew; but I am not sure that this class of reactions has been proved. They are conceivable, and therefore can not be left out of account. The known changes, as I have stated them, are those of the compounds themselves when not commingled with other substances. Hematite, magnetite, corundum, and quartz can be formed in the manner indicated; and hematite or magnetite schists (schists containing these minerals in conspicuous proportions) are not rare. The itabirite of Brazil is a rock of this kind, containing hematite, magnetite, and quartz.[b] Similar rocks have been described by H. Coquand[c] in France, and O. M. Lieber[d] in South Carolina. Coquand's rock is described as equivalent to a mica schist containing specular hematite in place of mica. Itabirite from Okande Land, West Africa, is reported by O. Lenz[e] as containing quartz, hematite, and magnetite, with quartz predominating. Another example from the Gold Coast, described by C. W. Gümbel,[f] contains also muscovite, ilmenite, and free gold. A German schist examined by C. Lossen[g] consisted of specular hematite and quartz.

---

[a] If a bed of limonite be regarded as a sedimentary rock, a bed of hematite may be its metamorphic equivalent.

[b] See Zirkel, Lehrbuch der Petrographie, 2d ed., p. 570, for references.

[c] Bull. Soc. géol., 2d ser., vol. 6, p. 291, 1849.

[d] Rept. Survey South Carolina, 1855, pp. 89–94; 1857, p. 79; 1858, p. 107.

[e] Verhandl. K.-k. geol. Reichsanstalt, 1878, p. 168.

[f] Sitzungsb. Akad. München, 1882, p. 183.

[g] Zeitschr. Deutsch. geol. Gesell., vol. 19, p. 614, 1867. Zirkel refers also to Norwegian examples reported by J. H. L. Vogt in a memoir which I have not seen.

FERRUGINOUS SCHISTS.

The ferruginous schists of the Lake Superior region may properly be mentioned here. According to C. R. Van Hise,[a] they are derived from carbonate rocks which he calls sideritic slates. These, by oxidation, pass into limonitic or hematitic slates, and from the latter the schists are derived. Ferruginous cherts are also formed, and some banded rocks of chert and hematite which Van Hise calls jaspilite. The silicification of the original siderite is attributed to the action of silica contained in percolating waters. The following analyses of the schists were made in the laboratory of the United States Geological Survey:

A. Grünerite-magnetite schist, Marquette region, Michigan. Contains grünerite, magnetite, and quartz. Described by C. R. Van Hise and W. S. Bayley in Mon. U. S. Geol. Survey, vol. 28, 1895. Analysis by H. N. Stokes.

B. Actinolite-magnetite schist, Mesabi Range, Minnesota. Described by W. S. Bayley, Am. Jour. Sci., 3d ser., vol. 46, p. 178, 1893. Consists of actinolite and magnetite. Analysis by W. H. Melville.

Analyses of ferruginous schists.

	A.	B.
SiO_2	46.25	12.35
Al_2O_3	.92	.10
Fe_2O_3	30.62	58.68
FeO	16.92	21.34
MgO	2.13	4.08
CaO	1.69	1.91
Na_2O	none	trace
H_2O	.42	.19
TiO_2	none	.12
P_2O_5	.07	.25
MnO	1.01	1.22
CuO	trace	.....
	100.03	100.24

DEHYDRATION OF CLAYS.

Rocks like those just considered, obviously, may vary from nearly pure amphibole to nearly pure iron ore, and the quartz-hematite schists may range between the two extremes in the same way. In all cases, however, the final product represents the dehydration of hydroxides, followed by partial reduction in the case of the magnetite schists. The origin of the hydroxides, whether from carbonates or from silicates, is a separate question.

The hydrous silicates of the sediments are chiefly those of aluminum. Some iron compounds also occur, such as glauconite, chloropal, or nontronite, but their mode of decomposition when dehydrated is not clearly known. In many cases, probably, they break down into ferric oxide and quartz; but they also, doubtless, contribute to the formation of less hydrous minerals, like staurolite and chloritoid.

[a] Treatise on metamorphism: Mon. U. S. Geol. Survey, vol. 47, pp. 830-842, 1904. See *also the literature* there cited, and especially Mon. U. S. Geol. Survey, vol. 28, 1895, by *C. R. Van Hise* and W. S. Bayley.

Of these species, more later. Magnesian silicates must also exist in the sediments, as talcose or serpentinous matter, but their dehydration products have already been discussed.[a]

Many hydrous silicates of aluminum have been described. A few of them are definite, others are more or less doubtful. Some, probably, are colloidal mixtures, which should not be formulated as distinct chemical compounds. The following minerals in this class are recognized by Dana as true species:

Kaolinite	$H_4Al_2Si_2O_9$.
Halloysite	$H_4Al_2Si_2O_9+aq$.
Newtonite	$H_8Al_2Si_3O_{11}+aq$.
Cimolite	$H_6Al_4Si_9O_{27}+3$ aq. (?)
Montmorillonite	$H_2Al_2Si_4O_{12}+n$ aq.
Pyrophyllite	$H_2Al_2Si_4O_{12}$.
Allophane	$Al_2SiO_5.5aq$.
Collyrite	$Al_4SiO_8.9aq$.
Schrötterite	$Al_{16}Si_3O_{30}.30aq$.

To this list rectorite[b] and leverrierite[c] should probably be added. Leverrierite, as described by P. Termier, has the composition of muscovite, with hydrogen replacing potassium, and a little iron equivalent to aluminum. Its formula, then, is $HAlSiO_4$, or $H_3Al_3Si_3O_{12}$, corresponding to muscovite, $H_2KAl_3Si_3O_{12}$. Rectorite, according to R. N. Brackett and J. F. Williams, has the same composition, plus an excess of water, which is driven off when the mineral is dried at 110°. Possibly the mineral kryptotile, an alteration product of kornerupine or prismatine, may be a compound of the same order. A. Sauer's[d] analysis of it gives approximately the formula $HAlSiO_4$. Silicates of this type, if their existence should be definitely established, would probably be found to be widely diffused and to play an important part in the development of phyllite or mica schist. They should take up potassium from percolating solutions, forming muscovite—a probability which deserves to be investigated with great care.

Upon complete dehydration all of the silicates in the list except collyrite and schrötterite should break down into mixtures of Al_2SiO_5 and SiO_2. Al_2SiO_5 represents empirically, the three minerals andalusite, kyanite, and sillimanite, which are isomeric but not identical. No other anhydrous silicate of aluminum alone is known to occur in nature. These three species, moreover, are all characteristic of the metamorphic schists, and must have been formed in most cases by some such process as that just indicated. Sometimes, how-

[a] See p. 521, *ante*.
[b] Am. Jour. Sci., 3d ser., vol. 42, p. 16, 1891.
[c] Bull. Soc. min., vol. 22, p. 27, 1899.
[d] Zeitschr. Deutsch. geol. Gesell., vol. 38, p. 705, 1886.

ever, other sources are to be assumed. For example, K. Dalmer [a] has described a phyllite containing muscovite and chlorite, which, by contact metamorphism, has been transformed into a biotite-andalusite schist. In this instance the andalusite seems to have been produced by a reaction between the two antecedent species. On the other hand, it has been shown by W. Vernadsky [b] that sillimanite is a normal constituent of hard porcelain, in which it is derived from kaolinite; and also that kyanite and andalusite are convertible into sillimanite by heating to a temperature of 1,320° to 1,380°. Kyanite often occurs in mica schist, and also in long, bladed crystals embedded in quartz. All three species alter into mica,[c] so that here we have a group of facts which bear obviously upon the interpretation of metamorphic processes. We do not yet know, however, the conditions which determine the formation in a rock of one or another of the three isomers. The chemical structure of the particular hydrous silicate from which andalusite, kyanite, or sillimanite has been derived probably has a distinct influence upon the reaction. Temperature, as shown by Vernadsky, must also be taken into account, and so, too, must pressure. The three minerals differ in density, and pressure may well help to determine which species shall form. The specific gravity of andalusite is near 3.2, that of sillimanite about 3.25, and that of kyanite varies little from 3.6. Kyanite, then, would be likely to appear under the greatest pressures and andalusite under the least, other conditions being equal. The problem is complicated, however, by the fact that the same rock often contains more than one of these minerals, together with products derived from them. The argillite of Harvard, Massachusetts, according to B. K. Emerson,[d] contains andalusite inclosing sillimanite, both in every stage of alteration to muscovite. The argillites of this region, modified by intrusions of granite, show a zonal system of changes. Where the temperature was lowest, andalusite and sillimanite form. With more intense heat, staurolite and garnet appear. Influx of alkaline waters from the heated granite changes these species to muscovite, while nearest the granite feldspars develop.

Staurolite, $HAl_5FeSi_2O_{13}$, specific gravity 3.75, is another mineral of the metamorphic schists, and one closely allied to the andalusite group. Its formation evidently requires the presence of iron in the sediments, and also conditions of temperature and pressure which could permit the retention of water. Garnet is one of its common associates, and so, too, are sillimanite and kyanite. Its most fre-

[a] Neues Jahrb., 1897, pt. 2, p. 156.

[b] Bull. Soc. min., vol. 13, p. 256, 1890. See also J. W. Mellor, Jour. Soc. Chem. Ind., vol. 26, p. 375, 1907.

[c] The reported alteration of kyanite into steatite is most questionable. Probably a compact muscovite (damourite) has been mistaken for talc.

[d] *Bull. Geol. Soc. America*, vol. 1, p. 559, 1889.

quent matrix is mica schist; but its mode of formation is not yet clearly understood. Staurolite is always contaminated by inclusions of other substances, and it alters readily into mica.

With more iron and possible hydration, schists are formed containing chloritoid or ottrelite. Chloritoid has the formula $H_2FeAl_2SiO_7$; but that of ottrelite is not certain. The best evidence goes to show that the two minerals are alike in type, except that chloritoid is an orthosilicate, and ottrelite a trisilicate. On this supposition the two formulæ become

$AlO_2Fe.SiO_4.AlOH.H.$	$AlO_2Fe.Si_3O_8.AlOH.H.$
Chloritoid.	Ottrelite.

Magnesium may replace iron to some extent, and in the Belgian ottrelites manganese plays a similar part. By dehydration, chloritoid would become $AlO_2Mg.SiO_4.Al$, or Al_2MgSiO_6, which is the formula of the aluminous constituent of augite and hornblende, and also of the imperfectly known mineral kornerupine. A relation between chloritoid and these silicates is therefore suggested, but what its real significance may be is unknown. Broadly considered, chloritoid and ottrelite belong to a group of silicates intermediate between the micas and the chlorites, from either of which groups they may be derived, or into which they may alter. In the ottrelite schists of Vermont, according to C. L. Whittle,[a] chlorite is derived from ottrelite, and the latter mineral was one of the last to form. In the Belgian phyllites, studied by J. Gosselet,[b] mica sometimes replaces ottrelite. The formation of ottrelite after the other minerals of the schists was also noted by W. M. Hutchings,[c] in a sericite-ottrelite-ilmenite phyllite from Cornwall, and by J. E. Wolff[d] in a rock found at Newport, Rhode Island. In a collection of rocks from the Transvaal, J. Götz[e] found ottrelite schist, andalusite schist, and an intermediate phase containing both ottrelite and andalusite.

Ottrelite and chloritoid are probably often confounded. At all events, chloritoid rocks have been less frequently described. C. Barrois[f] has reported them from the Ile de Groix, France; a garnet-chloritoid-quartz schist from Japan has been described by B. Koto;[g] and a rock from the province of Salzburg, Austria, studied by A. Cathrein, contained about 64 per cent of chloritoid, with 30 of quartz and some rutile. Other occurrences are well summed up by

[a] Am. Jour. Sci., 3d ser., vol. 44, p. 270, 1892.
[b] Ann. Soc. géol. du Nord, vol. 15, p. 185.
[c] Geol. Mag., 1889, p. 214.
[d] Bull. Mus. Comp. Zool., vol. 16, p. 159, 1890.
[e] Neues Jahrb., Beil. Bd. 4, p. 143, 1886.
[f] Ann. Soc. géol. du Nord, vol. 11, p. 18, 1884.
[g] Jour. Coll. Sci. Japan, vol. 5, p. 270, 1893.

F. Zirkel,[a] for both ottrelite and chloritoid. The abundant literature, however, is mainly descriptive, and sheds little light upon the genesis of these minerals. The following analyses represent rocks characterized by the andalusite and chloritoid groups. All except one, by Klement, were made in the laboratory of the United States Geological Survey.

Analyses of andalusite and chloritoid rocks.

A. Andalusite schist, Mariposa County, California. Analysis by W. F. Hillebrand. Described by H. W. Turner, Seventeenth Ann. Rept. U. S. Geol. Survey, pt. 1, p. 691, 1896. Contains quartz, biotite, andalusite, sericite, and minor accessories.

B. Chiastolite schist, Mariposa County, California. Analysis by G. Steiger. Described by Turner, Bull. U. S. Geol. Survey No. 150, p. 342, 1898. Contains andalusite (chiastolite), sillimanite, mica, etc.

C. Andalusite hornfels, Mariposa County. Analysis by Steiger. Described by Turner, op. cit., p. 342. Contains quartz, andalusite, mica, etc.

D. Andalusite schist, Skamania County, Washington. Analyzed and described by W. T. Schaller, Bull. U. S. Geol. Survey No. 262, p. 105, 1905. Contains andalusite, 35 per cent; quartz, 32 per cent; muscovite, 27 per cent; and minor accessories.

E. Kyanite schist, Serra do Gigante, Brazil. Analysis by Hillebrand. Described by O. A. Derby, Am. Jour. Sci., 4th ser., vol. 7, p. 343, 1899. Consists mainly of kyanite, chlorite, sericite, quartz, and rutile.

F. Sillimanite schist, San Diego County, California. Analyzed and described by Schaller, Bull. No. 262, p. 98, 1895. Mainly quartz, 69 per cent, and sillimanite, 31 per cent, neglecting water and minor accessories.

G. Chloritoid-phyllite, Liberty, Maryland. Analyzed by L. G. Eakins. Called "ottrelite-phyllite" by G. H. Williams, but the characteristic mineral is chloritoid. See Bull. U. S. Geol. Survey No. 228, p. 59.

H. Ottrelite schist, Monthermé, Belgium. Analyzed by C. Klement, described by A. F. Renard. Renard's memoirs on the phyllites of the Ardennes (Bull. Mus. roy. hist. nat. Belgique, vol. 1, p. 212, 1882; vol. 2, p. 127, 1883; vol. 3, p. 230, 1884) are rich in data concerning rocks of this class. For this particular schist, see vol. 3, p. 255. It contains ottrelite, 46.11 per cent; sericite, 23.35 per cent; and quartz, 23.15 per cent.

	A.	B.	C.	D.	E.	F.	G.	H.
SiO_2	64.28	62.15	65.10	57.18	38.32	75.54	34.92	51.93
Al_2O_3	17.28	19.34	17.77	34.10	28.16	18.65	32.31	27.45
Fe_2O_3	1.10	4.23	1.95	.54	2.24	.35	10.21	2.01
FeO	5.34	2.25	3.29	.28	4.02	.06	8.46	8.10
MgO	2.57	1.88	1.43	.10	12.04	none	1.13	1.20
CaO	1.19	1.50	1.38	.63	.32	.03	.36	.18
Na_2O	.91	1.60	2.25	.39	.16	none	2.12	.79
K_2O	2.93	3.07	2.45	2.57	1.11	none	1.87	1.60
H_2O-	.20	.19	.47	.69	.55	1.10	} 5.29	} 3.92
H_2O+	2.72	1.79	2.49	2.02	7.46	3.67		
TiO_2	.65	.80	.72	.66	4.93	.48	3.37	.92
ZrO_2	.....	.....	.....	.02	.09	.06	.....	.....
C	.43	1.12	1.21	.....	.....	.....	.....	1.05
SO_3	.....	.13	.03	.....	.....	.....	.....	.....
S	.....	.....	.....	.....	trace	.....	.....	.....
F	.....	.22	.12	.....	trace?	.....	.....	.....
Cl	.....	none	trace	.....	.....	.....	.....	.....
P_2O_5	.27	.15	.14	.53	.47	trace	.23	.....
MnO	.09	trace	none	none	.16	.....	trace	.57
BaO	.10	.04	none	.04	.....	.....	.....	.....
SrO	trace	none	none	trace?	trace	.....	.....	.....
(NiCo)O	.....	.....	.....	.....	.04	.....	.....	.....
Li_2O	trace	none	none	none	trace	.....	.....	.....
FeS_2	.....	.....	.....	.28	.....	.10	.....	.....
	100.06	100.46	100.80	100.03	100.07	100.04	100.27	99.72

[a] Lehrbuch der Petrographie, 2d ed., vol. 3, pp. 282, 294, 303–306.

MICA SCHIST.

A great variety of other schists, corresponding to the variations in the sediments themselves, have received special descriptive names. Graphite schists, derived from carbonaceous shales; tourmaline schists, containing tourmaline, and garnet-mica schists are good examples. The commonest type of all, however, is the ordinary mica or sericite schist, which is essentially a mixture of quartz and mica, with varying accessories. A paragonite schist contains the soda mica, paragonite, instead of the commoner muscovite. A shale passes into a slate; in that fine scales of mica develop, forming a phyllite, and with more complete recrystallization a mica schist is produced. Mica schists also originate from the alteration of a granitic detritus consisting of quartz and feldspar,[a] the latter mineral changing to muscovite, or, under undetermined conditions, to biotite. Chlorite, epidote, garnet, tourmaline, and feldspars are common accessory minerals in rocks of this class. The following analyses of mica schists were made in the Survey laboratory:

Analyses of mica schists.

A. Quartz-sericite schist, Mount Ascutney, Vermont. Analyzed by W. F. Hillebrand. Described by R. A. Daly in Bull. U. S. Geol. Survey No. 209, 1903.

B. Sericite schist, Ladiesburg, Maryland. Analyzed by G. Steiger. Described by W. S. Bayley in Bull. U. S. Geol. Survey No. 150, p. 317, 1898.

C. Sericite schist, Marquette region, Michigan. Analysis by Steiger. Described by C. R. Van Hise and W. S. Bayley, Mon. U. S. Geol. Survey, vol. 28, 1895. Mainly sericite and quartz.

D. Mica schist, Crystal Falls district, Michigan. Analyzed by H. N. Stokes. Described by H. L. Smyth, Mon. U. S. Geol. Survey, vol. 36, p. 274, 1898. Contains biotite, quartz, some microcline, and magnetite.

E. Mica schist, near Gunflint Lake, Minnesota. Analyzed by T. M. Chatard. Contains biotite, quartz, feldspar, (?) and pyrite, as reported by Van Hise.

F. Feldspathic mica schist, Mariposa County, California. Analyzed by Hillebrand. Described by H. W. Turner, Seventeenth Ann. Rept. U. S. Geol. Survey, pt. 1, p. 691, 1896. Contains quartz, feldspar, biotite, muscovite, apatite, and specular iron.

	A.	B.	C.	D.	E.	F.
SiO_2	90.91	57.24	70.76	64.71	64.77	70.40
Al_2O_3	4.18	23.48	14.83	16.43	14.45	14.70
Fe_2O_3	.22	3.19	1.46	1.83	1.84	.65
FeO	1.27	4.87	3.09	3.84	4.54	2.57
MgO	.37	.93	1.99	2.97	2.34	1.47
CaO	.22	.09	.36	.08	2.33	1.63
Na_2O	.77	1.18	.47	.11	1.37	3.17
K_2O	.58	3.55	3.50	5.63	5.03	3.46
H_2O-	.06	.33	.09	.31	.07	.19
H_2O+	.74	4.65	2.70	2.79	1.92	.91
TiO_2	.28	.08	.33	.72	.60	.51
ZrO_2	.02	.....	.....	.....	.....	.....
CO_2	.18	.....	.....	.....	.41	.....
P_2O_5	.05	.09	.26	.02	.20	.05
SO_3	none	.....	.....	.....	.60	.....
F	trace	.....	.....	.....	.....	.....
MnO	trace	none	.....	trace	.11	.08
BaO	trace	.....	.....	.....	.....	.09
SrO	.....	.....	.....	.....	.....	trace
Li_2O	.....	.....	.....	.....	.....	trace
C	.10	.....	.....	.....	.....	.15
FeS_2	.11	.....	.....	.....	.....	.....
	100.06	99.68	99.84	99.44	100.58	100.03

[a] See C. R. Van Hise, Bull. Geol. Soc. America, vol. 1, p. 206, 1898, on schists from the Black Hills.

Before leaving the subject of mica schist a word of caution may not be superfluous. It is often assumed that the mica in such a rock has been derived from the alteration of feldspathic particles contained in the original sediments, and this no doubt is frequently the case. The same process operates that is traced in the sericitization of an igneous rock, but it is not necessarily general. We have seen that muscovite can be formed from andalusite, for instance, and the latter probably from clay substance. In short, micas may form in a number of different ways, so that no single set of reactions can account for all of its occurrences. Sometimes its source can be determined, but not always.

Many schists contain tourmaline as an essential constituent. Dumortierite also occurs in them, perhaps more often than is commonly supposed. These species are borosilicates, and their generation is usually attributed to the agency of boron-bearing gases or vapors, emitted from heated magmas along their contacts with sedimentary deposits. Boron compounds, and fluorine compounds also, exist in volcanic emanations, as was shown in an earlier chapter,[a] and they probably produce, in many instances, the effects just ascribed to them. But here again caution is necessary. We do not know how widely boron and fluorine may be disseminated in rock-forming materials, for their determination in traces is very difficult and rarely attempted. Fluorine must be abundantly diffused as a constituent of the ubiquitous mineral apatite, and boron may be equally common. We observe its concentration in tourmaline, but we can not be positive as to its origin except in certain individual cases. One of these seems to be the contact between mica schist and granite on Mount Willard, in the White Mountains of New Hampshire, as described by G. W. Hawes.[b] Here there are seven well-defined zones, as follows:

1. Argillitic mica schist, chloritic.
2. Argillitic mica schist, biotitic.
3. Tourmaline hornstone.
4. Tourmaline veinstone.
5. Mixed granite and schist.
6. Granite porphyry, biotitic.
7. Normal granite, hornblendic. This contains quartz, albite, orthoclase, hornblende, and some biotite. In the porphyry, biotite entirely replaces the hornblende.

The remarkably complete series of analyses by Hawes is given in the next table.

---

[a] See *ante*, Chapter VIII.
[b] Am. Jour. Sci., 3d ser., vol. 21, p. 21, 1881.

Analyses of granite and mica schist near contact, Mount Willard.

A The normal Albany granite.
B. Porphyry, 3 feet from contact.
C. Porphyry, 2 inches from contact.
D. Tourmaline veinstone, on contact.
E. Tourmaline hornstone, 1 foot from contact.
F. Schist, 15 feet from contact.
G. Schist, 50 feet from contact.
H. Schist, 100 feet from contact.

	A	B.	C.	D.	E.	F.	G.	H.
SiO_2	72.26	73.09	71.07	66.41	67.88	66.30	63.35	61.57
Al_2O_3	13.59	12.76	12.34	16.84	14.67	16.35	19.69	20.55
Fe_2O_3	1.16	1.07	2.25	1.97	2.37	.95	.72	2.02
FeO	2.18	4.28	4.92	5.50	3.95	5.77	5.48	4.28
MgO	.06	.09	.19	1.71	1.29	1.63	1.77	1.27
CaO	1.13	.30	.55	.37	.30	.24	trace	.24
Na_2O	3.85	3.16	2.84	1.76	3.64	1.11	1.12	.68
K_2O	5.58	5.10	5.53	.56	4.08	3.40	3.47	4.71
H_2O	.47	.73	.72	1.31	1.01	3.02	3.73	4.09
TiO_2	.45	.40	.27	1.02	.93	1.28	1.00	1.10
B_2O_3	.....	.....	.....	2.96	.97	trace	.....	.....
F	.....	.....	.....	.25	trace	.....	.....	.....
MnO	trace	.08	trace	.12	.11	trace	.16	.10
	100.73	101.06	100.68	100.78	101.20	100.05	100.49	100.61

The dehydration in passing from schist to granite is here very obvious, but the sudden appearance of boric oxide is more striking. That its concentration was brought about by pneumatolytic processes is the most reasonable hypothesis by which to account for its presence at the line of contact and its absence elsewhere. The mineralogical composition of the rocks D to H, as given by Hawes, presents a still clearer picture to the mind of the changes which have occurred:

Mineralogical composition of tourmaline rocks and mica schist, Mount Willard.

	D.	E.	F.	G.	H.
Quartz	50.03	50.82	45.15	39.17	36.87
Muscovite } Biotite }	.....	29.67	43.89	44.53	49.30
Chlorite	.....	.....	6.65	13.70	8.62
Ilmenite	1.94	1.77	2.43	1.90	2.09
Magnetite	2.86	3.44	1.38	1.04	2.93
Tourmaline	45.95	14.92	.....	.....	.....

Here we see that the chlorite of the schist alters to biotite, by dehydration, as the contact is approached, and that the tourmaline has been formed largely at the expense of the micas. The absence of feldspar, which is abundant in the granite, is also noticeable. On the granite side of the contact the rocks are feldspathic; on the schistose side they are micaceous; at the contact neither feldspar nor mica is shown by Hawes's figures. Probably both minerals have contributed to the generation of tourmaline, which is related to both. Tourmaline often alters to mica, and tourmaline crystals are known inclosing cores of feldspar.

GNEISS.

The gneisses form the largest group of metamorphic rocks, and represent both igneous and sedimentary formations. Some of them are plutonic rocks, structurally modified; others are recrystallized sedimentaries. The term "gneiss," unfortunately, has been used in quite different senses. For present purposes, J. F. Kemp's definition [a] may perhaps serve as well as any. He defines gneiss as a "laminated metamorphic rock, which usually corresponds in mineralogy to some one of the plutonic types." The gneisses "differ from schists in the coarseness of the laminations, but as these become fine they pass into schists by insensible gradations." Under this definition any plutonic rock may have its gneissoid equivalent, and C. H. Gordon [b] has proposed to name the gneisses accordingly. Thus we may have granitic gneiss, syenitic gneiss, dioritic gneiss, etc., including in the series foliated rocks derived from pyroxenite or peridotite. The common usage, however, is not quite so extreme, and the term gneiss is practically restricted to granular, laminated rocks analogous in composition to granite, syenite, or diorite. Chemically these gneisses differ very little from their igneous equivalents, but those derived from sedimentary rocks are likely to be relatively poor in alkalies and to contain minerals of calcareous origin. In some cases gneisses of sedimentary origin contain impurities of organic derivation, either coaly or graphitic. For example, in a gneiss from the Black Forest, H. Rosenbusch [c] found coaly particles which contained nitrogenous matter, undoubtedly derived from organic substances. A convenient aid to nomenclature is that offered by Rosenbusch,[d] who calls gneiss of igneous origin "orthogneiss," and that of sedimentary origin "paragneiss." There are also descriptive names of the ordinary character, which indicate mineralogical peculiarities. Chlorite gneiss, cordierite gneiss, tourmaline gneiss, garnet gneiss, epidote gneiss, sillimanite gneiss, albite gneiss, muscovite gneiss, biotite gneiss, two-mica gneiss, plagioclase gneiss, and orthoclase gneiss are names of this kind. The sedimentary varieties are also named genetically, as pelite gneiss, psammite gneiss, arkose gneiss, etc., according to the derivation of the rock from shaly, sandy, or arkose materials.

The following analyses of gneiss, with the exception of the Canadian example, were made by the chemists of the United States Geological Survey:

Analyses of gneisses.

A. Sedimentary gneiss, St. Jean de Matha, Quebec, Canada. Analysis by N. N. Evans. Described by F. D. Adams, Am. Jour. Sci., 3d ser., vol. 50, p. 67, 1895. Adams gives several other analyses of gneisses.

---

[a] Handbook of Rocks, 3d ed., p. 123.
[b] Bull. Geol. Soc. America, vol. 7, p. 122, 1895.
[c] Mitth. Gr. badisch. geol. Landesanstalt, vol. 4, Heft 1, 1899.
[d] Elemente der Gesteinslehre, 2d ed., p. 484.

B. Quartz-biotite-garnet gneiss, Fort Ann, New York. Analysis by W. F. Hillebrand. Reported by J. F. Kemp to contain quartz, garnet, biotite, orthoclase, some plagioclase, and zircon.

C. Average sample of mica gneiss, near Philadelphia, Pennsylvania. Analysis by Hillebrand. Described by F. Bascom, Maryland Geol. Survey, Cecil County volume, p. 116, 1902. Contains quartz, muscovite, feldspars, and minor accessories.

D. Gneiss from Dorsey's Run, Maryland. Analysis by Hillebrand. Described by C. R. Keyes, Fifteenth Ann. Rept. U. S. Geol. Survey, p. 697, 1895. Probably of sedimentary origin.

E. Gneiss, probably sedimentary, Great Falls of the Potomac. Analysis by Hillebrand. Described by G. H. Williams, Fifteenth Ann. Rept. U. S. Geol. Survey, p. 670, 1895.

F. Biotite gneiss, Upper Quinnesec Falls, Menominee River, Michigan. Analysis by R. B. Riggs. Described by G. H. Williams, Bull. U. S. Geol. Survey No. 62, p. 119, 1890. Contains biotite, soda orthoclase, quartz, and accessory sphene, zircon, and apatite.

G. Quartz-norite gneiss, Odessa, Minnesota. Analysis by H. N. Stokes. Described by W. S. Bayley, Bull. U. S. Geol. Survey No. 150, p. 358, 1898. Contains quartz, plagioclase, and pyroxene, with accessory biotite, garnet, pyrite, and magnetite.

	A.	B.	C.	D.	E.	F.	G.
SiO_2	61.96	65.09	66.13	48.92	78.28	67.77	61.04
Al_2O_3	19.73	16.37	15.11	16.57	9.96	16.61	16.97
Fe_2O_3	.....	.93	2.52	4.21	1.85	2.06	.....
FeO	4.60	5.64	3.19	9.18	1.78	1.96	5.58
MgO	1.81	2.40	2.42	5.98	.95	1.26	3.62
CaO	.35	2.40	1.87	9.69	1.68	1.87	5.99
Na_2O	.79	3.31	2.71	2.47	2.73	4.35	1.96
K_2O	2.50	1.93	2.86	1.56	1.35	2.35	.55
H_2O-	1.82	.13	.24	.68	.12	1.69	.43
H_2O+		.58	1.55		.83		
TiO_2	1.66	.93	.82	.....	.70	.....	.....
ZrO_2	.....	.01	(?)	.....	.....	.....	.....
CO_2	.....	.07	none	.....	.....	.19	.....
P_2O_5	.....	.11	.22	.....	.11	.....	.....
S	.....	.03	.03	.....	.....	.....	.....
Fe_7S_8	.....	.....	.....	.....	.....	.....	3.73
FeS_2	4.33	.....	.....	.....	.....	.....	.....
Cr_2O_3	.....	trace	.....	.....	.....	.....	.....
NiO	.....	trace	trace	.....	.....	.....	.....
MnO	trace	.16	.20	.....	.08	.....	.....
BaO	.....	.03	trace	.....	.02	.....	.....
SrO	.....	trace	trace	.....	trace	.....	.....
Li_2O	.....	trace	none	trace	trace	.....	.....
	99.55	100.12	99.87	100.26	100.44	100.11	98.87

In a broad way the general order of change from clay to slate, shale, and metamorphic schists is well shown by a series of averaged analyses compiled by C. R. Van Hise.[a] The analyses chosen for combination were all of pelitic material.

Average analyses of clay, shale, slate, and schist.

A. Average of twelve analyses of clays and soils.
B. Average or composite analysis of seventy-eight shales.
C. Average of twenty-two analyses of slates.
D. Average of five analyses of schists.

[a] Treatise on metamorphism: Mon. U. S. Geol. Survey, vol. 47, pp. 890, 891, 896, 1904. The data are all to be found in Bull. U. S. Geol. Survey No. 228; the shale average on p. 21.

	A.	B.	C.	D.
SiO_2	54.28	58.38	61.90	65.74
Al_2O_3	14.51	15.47	16.54	17.35
Fe_2O_3	6.25	4.03	2.73	1.90
FeO	.77	2.46	3.63	3.35
MgO	2.99	2.45	2.99	1.90
CaO	5.04	3.12	1.07	1.25
Na_2O	1.21	1.31	2.57	1.78
K_2O	2.12	3.25	3.15	3.28
H_2O	8.41	5.02	3.84	2.01
TiO_2	.42	.65	.82	.55
CO_2	3.53	2.64	.59	none
P_2O_5	.09	.17	.04	.12
SO_3	.08	.65	.03	.03
Cl	.02	.....	trace	trace
F	.....	.....	trace	.07
MnO	.08	trace	trace	.03
SrO	.....	none	trace	trace
BaO	.....	.05	.01	.05
Li_2O	.....	trace	trace	trace
FeS_2	.....	.....	.11	.....
C	.24	.81	.22	.58
	100.04	100.46	100.24	99.99

In these figures, reading from clay to schist, we see a steady loss of water and of carbon dioxide. The latter has been gradually replaced by silica, and silica has also increased in proportion by its assumption as a cementing substance. Ferric iron, furthermore, is partly reduced to the ferrous state, and there is an apparent gain in alumina, which may be partly real, and so far due to cementation. The averages represent too few individual analyses to warrant any elaborate discussion of them, but they serve to illustrate the general tendency of the metamorphic processes.

METAMORPHIC LIMESTONES.

The metamorphism of limestone is effected by a variety of processes which are quite distinct in many particulars from those outlined in the preceding pages. A pure or relatively pure limestone may recrystallize into a compact marble, as shown in the chapter upon the sedimentary rocks. If it contains magnesium carbonate, dolomite is produced; and the presence of iron may determine the formation of mixed carbonates, such as ankerite or mesitite. These changes are of the simplest character and call for no further discussion now.

But pure limestones are relatively rare. Sandy or argillaceous impurities are generally present, and also silicates produced by reactions within filtrating waters. When limestones of this sort are metamorphosed, either dynamically or by contact with igneous injections, new minerals are generated, and the range of possibilities becomes very broad. Each impurity exerts its own peculiar influence, and operates to develop certain individual substances. Organic matter, for example, furnishes the material for graphite, which is very common in metamorphosed limestones. In the Adirondack

region there are numerous beds of white, crystalline limestone, thickly spangled with brilliant hexagonal plates of graphite; and these localities are typical of many others.

When silica is the sole impurity of importance, it can crystallize as quartz, or react with the calcium carbonate to form the silicate, wollastonite. No more limpid crystals of quartz are known than those found in the cavities of Carrara marble. As for wollastonite, $CaSiO_3$, it is often formed at contacts between limestone and igneous rocks, and it is also found disseminated through schists and gneisses. It must be remembered that shales and sandstones often contain calcareous matter, which undergoes the same transformations that the concentrated limestones experience. Calcium carbonate in a siliceous sedimentary rock may easily become the progenitor of wollastonite, garnet, scapolite, epidote, and other calciferous species. Carbon dioxide is expelled, and silicates are produced.

The development of wollastonite at an igneous contact, or, indeed, in any metamorphic rock, has peculiar geological significance. E. T. Allen and W. P. White [a] have shown that this mineral can be formed only at temperatures not exceeding 1,180°. Above that temperature it passes into the pseudohexagonal modification, which has often been prepared artificially, but is unknown as a natural species. The presence of wollastonite, then, is evidence that the rock containing it had recrystallized at some temperature below the transition point. If that degree of heat were ever exceeded in a contact zone, we should expect the pseudohexagonal silicate to appear; since it does not, we are justified in assuming that this form of metamorphism is always effected at lower temperatures. We thus obtain a definite datum point in what has been called the "geological thermometer."

The recrystallization of a sedimentary limestone containing limonitic impurities or hydroxides of aluminum will obviously produce inclusions of magnetite, hematite, or corundum. Magnetite has often been identified in crystalline limestones, and similar occurrences of corundum are not uncommon. The Burmese rubies, for example, are found in crystalline limestone, and so, too, are the red and blue corundums of Newton, New Jersey. When alumina and silica are present together, the reaction with calcium carbonate leads to the formation of various silicates, the conditions which determine the appearance of each one, however, not being definitely known. Cinnamon garnet, vesuvianite, epidote, zoisite, and the scapolites are among the species which appear most frequently. Gehlenite also occurs, but more rarely—for example, in marble, at the classical locality of Monzoni in the Tyrol.[b] Metamorphosed limestone with inclusions of

[a] Am. Jour. Sci., 4th ser., vol. 21, p. 89, 1906. The memoir is prefaced by a note from G. F. Becker, who points out the geological bearing of the observations.

[b] See C. Doelter, Jahrb. K.-k. geol. Reichsanstalt, 1875, p. 239. Doelter also reports hematite in these marbles; and it has been identified by G. d'Achiardi in Carrara marble.

this class are common; for instance, in a belt extending from southwestern Maine to central Massachusetts. From two points in this belt, at Raymond and Phippsburg, Maine, crystallized anorthite has also been identified by analyses made in the laboratory of the United States Geological Survey.[a] The other feldspars as well, albite, orthoclase, and the plagioclases, are known as contact minerals or inclusions in crystalline limestones,[b] and also the micas muscovite, biotite, and phlogopite. Phlogopite is essentially a mineral of this group of rocks, its formation and that of biotite requiring the presence of magnesium compounds. To form scapolites, sodium chloride is necessary, but that may easily come from percolating waters, or from apatite. The alkalies required by the feldspars and micas may have a similar origin, or else be derived from impurities in the sediments from which the limestones were formed.

Nearly all limestones are more or less magnesian or ferruginous, facts which determine the formation of many metamorphic minerals. Magnesia, for instance, may crystallize by itself as periclase, and that species alters into brucite. Magnesia and alumina together give rise to spinel. With silica, magnesian silicates, often ferriferous, may form, such as forsterite, olivine, enstatite, and hypersthene. With lime and magnesia together, monticellite is produced, and also a wide range of pyroxenes and amphiboles. Augite, hornblende, diallage, diopside, actinolite, and tremolite are common in metamorphic limestones, and the minerals of the chondrodite-humite series are also characteristic of these rocks in many localities. The white, yellow, and brown magnesian tourmalines are other species of this class. Furthermore, the olivines, pyroxenes, amphiboles, and chondrodites alter into serpentine and talc, forming the ophicalcite marbles or verde antique.[c]

In a Scottish dolomitic marble containing forsterite, tremolite, diopside, and brucite, J. J. H. Teall [d] has observed a dedolomitization due to the silication of the double carbonate. That changes to diopside without change of ratios, and the partly altered rock shows the two species in juxtaposition. The metamorphosis was effected by a plutonic intrusion, and where silica was deficient, brucite appeared. Probably in the latter case magnesium carbonate was first reduced to periclase, MgO, which was later hydrated to brucite, MgO_2H_2. The mixture of calcite and brucite is identical with the

[a] Bull. U. S. Geol. Survey No. 220, p. 27, 1903. Anorthite also occurs in the marble of Monzoni, in the Tyrol. See G. vom Rath, Zeitschr. Deutsch. geol. Gesell., vol. 27, p. 379, 1875.

[b] See, for example, G. Linck, Neues Jahrb., 1907, p. 21, on orthoclase from the dolomite of Campolongo.

[c] In Mon. U. S. Geol. Survey, vol. 46, p. 221, 1904, W. S. Bayley described a talcose schist from the Aragon iron mine, Michigan, which was probably derived from a dolomite. An analysis of it, by G. Steiger, is given, and also its mineralogical composition.

[d] *Geol. Mag.*, 1903, p. 513.

predazzite of the Tyrol.[a] It may be noted here that certain of the Adirondack limestones are regarded by J. F. Kemp [b] as having been originally siliceous dolomites, in which the silica and magnesia have segregated as pyroxene. In northern New Jersey, according to L. G. Westgate,[c] a quartz rock and a quartz-pyroxene rock have been formed by the metamorphism of limestones.

In addition to the minerals already named, the crystalline limestones contain many other less important species. Apatite, fluorite, rutile, perofskite, titanite, dysanalyte, and zircon are among them. By the reduction of sulphates, a considerable number of sulphides may be formed. At Carrara, for instance, G. d'Achiardi [d] found realgar, orpiment, sphalerite, pyrite, arsenopyrite, galena, chalcocite, and tetrahedrite; and also native sulphur and gypsum. Pyrrhotite and molybdenite have been identified at other localities, and in the famous Binnenthal, in Switzerland, several rare sulphosalts occur in a crystalline dolomite. In short, the list of minerals now known as existing in metamorphosed limestones must comprise at least 70 species and possibly more.[e]

The rocks thus formed from limestones and dolomites, or from mixtures of these with siliceous material, can vary from a nearly pure, recrystallized carbonate to an indefinite aggregate of silicates alone. Even in a single bed the rocks may range from one extreme to the other. Analyses of such rocks, therefore, have little significance and are not often made. Three examples from the silicate side of the group may serve to illustrate the variety of composition:

Analyses of metamorphic silicate rocks.

A. Wollastonite gneiss, Amador County, California. Analysis by W. F. Hillebrand. Described by H. W. Turner, Seventeenth Ann. Rept. U. S. Geol. Survey, pt. 1, p. 521, 1896. Consists mainly of wollastonite, but garnet, quartz, and titanite are also present.

B. Prehnite rock, Black Forest, Germany. Analysis by C. Schnarrenberger. Described by H. Rosenbusch, Mitth. Gr. badisch. geol. Landesanstalt, vol. 5, Heft 1, 1905. Estimated to contain 46.2 per cent prehnite, 37.9 albite, 13.8 actinolite, and 3.2 kaolin and nontronite. Probably formed from a marl containing 34.5 per cent of carbonates with 65.5 silicates and quartz.

C. Garnet rock, Black Forest. Analysis by Schnarrenberger. Described by Rosenbusch, loc. cit. Probably derived from an original mixture of 48 per cent carbonates and 52 of silicates, chiefly kaolin. Contains about 75 per cent garnet, 10 per cent soda-potash mica, and 15 per cent hornblende.

---

[a] See *ante*, p. 489.

[b] Bull. Geol. Soc. America, vol. 6, p. 241, 1894. In the same volume, p. 263, C. H. Smyth discusses another group of Adirondack limestones which were metamorphosed along contacts with gabbro.

[c] Am. Geologist, vol. 14, p. 308, 1894.

[d] Atti Soc. toscana sci. nat., Pisa, vol. 21, 1905.

[e] A list is given by F. Zirkel in Lehrbuch der Petrographie, 2d ed., vol. 3, p. 448. See also B. Lindemann, Neues Jahrb., Beil. Bd. 19, p. 197, 1904. For the Ceylonese localities, see A. K. Coomára-Swámy, Quart. Jour. Geol. Soc., vol 58, p. 399, 1902. J. F. Kemp and A. Hollick have described the crystalline limestones of Warwick, New York, in Ann. New York Acad. Sci., vol. 7, p. 644, 1893.

	A.	B.	C.
SiO_2	50.67	50.65	41.01
Al_2O_3	6.37	19.54	18.50
Fe_2O_3	.31	3.34	6.57
FeO	.50	none	11.06
MgO	.58	3.92	11.02
CaO	40.34	16.11	10.31
Na_2O	.14	3.91	.48
K_2O	.22	.84	.31
H_2O	.39	[a] 3.10	1.18
TiO_2	.20	trace	.....
CO_2	.52	.....	.....
MnO	trace	.....	.....
	100.24	100.41	100.44

[a] Loss on ignition.

CHAPTER XV.

METALLIC ORES.

DEFINITION.

From a strictly scientific point of view, the terms metallic ore and ore deposit have no clear significance. They are purely conventional expressions, used to describe those metalliferous minerals or bodies of mineral having economic value, from which the useful metals can be advantageously extracted. In one sense, rock salt is an ore of sodium, and limestone an ore of calcium; but to term beds of these substances ore deposits would be quite outside of current usage.

In the previous chapters of this work several forms of ore deposit have been described; and therefore the present chapter is in some measure supplementary. Its purpose is to deal with the subject more fully, and especially to give details concerning certain groups of ores which have been left out of account hitherto. Little has been said so far of the sulphides, and these are among the most important of economic minerals. Their genesis, their deposition in veins or pockets, their alterations and transferences are yet to be considered.

Upon the classification of ore deposits there has been much controversy, and various systems are in vogue.[a] To the geologist or miner this question is most important; to the chemist it is less fundamental. Regarded from the genetic side, a large part of the field has been already covered; and it is easy to see that many ore deposits, if not all, fall under the headings of earlier chapters. For example, certain metallic ores occur as volcanic sublimates; others, like the titaniferous magnetites, are magmatic segregations, or local developments of igneous rocks. The sands and gravels that yield chromite, tinstone, gold, platinum, etc., are detrital in character; many manganese and iron ores are sedimentary rocks, and from the latter metamorphic

[a] For recent papers and works on this subject, see F. Pošepný, Trans. Am. Inst. Min. Eng., vol. 23, p. 197, 1893. J. H. L. Vogt, idem, vol. 31, p. 125, 1901. L. De Launay, Contribution à l'étude des gîtes métallifères, Paris, 1897. J. F. Kemp, Ore deposits of the United States and Canada, New York, 1900. W. H. Weed and J. E. Spurr, Eng. and Min. Jour., vol. 75, p. 256, 1903. R. Beck, Lehre von den Erzlagerstätten, Berlin, 1903; and its English translation by Weed, New York, 1905. A. W. Stelzner and A. Bergeat, Die Erzlagerstätten, Leipzig, 1904. C. R. Van Hise, Treatise on metamorphism, Mon. U. S. Geol. Survey, vol. 47, chapter 12, 1904. W. H. Weed, Trans. Am. Inst. Min. Eng., vol. 33, p. 717, 1903. C. R. Keyes, idem, vol. 30, p. 323, 1900. G. Gürich, Zeitschr. prakt. Geol., 1899, p. 173.

beds of magnetite or hematite are derived. Some ore bodies are residues from the concentration of limestones; others represent metasomatic replacements; others again are deposited or precipitated from solutions. In short, an ore body is simply a concentration of certain compounds of certain metals effected by processes with which we are already familiar. Since, however, each metal forms its own special compounds, and exhibits reactions peculiar to itself, it is best for chemical purposes to adopt a chemical classification, with which the broad, general principles can be correlated. Each metal, therefore, will be treated by itself as a chemical individual and from a chemical point of view. Geologically it is important to know whether an ore deposit, laid down from solution, occupies the pores of a sandstone, a limestone cavern, or a fissure in the rocks; and it is also desirable to ascertain how these cavities or crevices were formed. To the chemist these considerations are for the most part irrelevant; but the conditions under which given compounds can be dissolved or precipitated are fundamental. What are the components of ore bodies? How were they produced? In what way are they redistributed? These are some of the questions which the chemist is expected to answer. The details must be studied with reference to the individual metals; but some general considerations require attention first.

SOURCE OF METALS.

Although the immediate derivation of metallic ores is often from sedimentary rocks, the original source of the metals is to be sought in the igneous magmas. In igneous rocks of some sort the metals were once diffused, and their presence in eruptive material is easily detected. G. Forchhammer [a] in a series of rock samples found traces of silver, copper, lead, bismuth, cobalt, nickel, zinc, arsenic, antimony, and tin, to say nothing of the commoner metals, iron and manganese. Some of the same elements were found in the ashes of plants, which had extracted them from the soil. From these experiments Forchhammer concluded that ore bodies derived their contents from the neighboring rocks, a conclusion at which other investigators have also arrived. In an elaborate series of researches F. Sandberger [b] found that the dark silicates of many rocks contained lead, copper, tin, antimony, arsenic, nickel, cobalt, bismuth, and silver, and upon these facts he based his famous theory of "lateral secretion." That is, Sandberger concluded that metalliferous veins derived their metallic contents by lateral leaching from adjacent rocks. This theory, however, was subjected to much criticism by A. Stelzner, F. Pošepný,

[a] Pogg. Annalen, vol. 95, p. 60.

[b] Untersuchungen über Erzgänge, Wiesbaden, 1882 and 1885. See also Neues Jahrb., 1878, p. 291, on copper, lead, cobalt, and antimony in basalt.

and others,[a] it being shown that in some instances at least the country rocks might have received secondary impregnations from the veins. In other investigations, some earlier and some more recent, the dissemination of heavy metals in igneous rocks is clearly proved. A. Daubrée[b] found determinable quantities of arsenic and antimony in basalt—namely, 0.01 gram of As and 0.03 of Sb to the kilogram. The same metals, together with lead and copper, were detected by G. F. Becker[c] in the fresh granites near Steamboat Springs, Nevada. In the porphyries of Leadville, Colorado, W. F. Hillebrand[d] was able to determine lead. Out of 18 samples, taken at points distant from ore bodies, three contained no lead, the richest carried 0.0064 per cent, and the average was 0.002 per cent of PbO. One porphyry yielded 0.008 per cent of zinc oxide, and a rhyolite contained 0.0043 per cent. Silver was also found in these rocks in variable quantities, the best average giving 0.0265 ounce per ton. Gold, though sometimes present in traces, was generally not found. Traces of silver in diabase and diorite are reported by G. F. Becker[e] near Washoe, Nevada, and in the quartz porphyry of Eureka J. S. Curtis[f] found both gold and silver. Silver, according to S. F. Emmons,[g] is also present in the eruptive rocks of Custer County, Colorado, and J. W. Mallet found it in volcanic ash from two points in the Andes. Ash from Cotopaxi[h] carried silver to the extent of 1 part in 83,600, and ash from Tunguragua[i] yielded 1 part in 107,200. The latter quantity is very near Hillebrand's average for the Leadville porphyries which is equivalent to 1 part in 110,000. In recent volcanic ash from Vesuvius E. Comanducci[j] found 0.0854 per cent of copper oxide, with 0.0038 of cobalt oxide.

In four rocks—granite, porphyry, and diabase from the Archean of Missouri—J. D. Robertson[k] determined the following percentages of lead, zinc, and copper:

Pb, 0.00197 to 0.0068; average, 0.004.
Zn, 0.00139 to 0.0176; average, 0.009.
Cu, 0.00240 to 0.0104; average, 0.006.

The adjacent Silurian and Carboniferous limestones also contained these metals, but in slightly smaller proportions.

---

[a] A. Stelzner, Zeitschr. Deutsch. geol. Gesell., vol. 31, p. 644, 1879, and rejoinder by F. Sandberger, idem, vol. 23, p. 350, 1880. F. Pošepný, Trans. Am. Inst. Min. Eng., vol. 23, pp. 247–254, 1893.

[b] Compt. Rend., vol. 32, p. 827, 1851.

[c] Mon. U. S. Geol. Survey, vol. 13, p. 350, 1888.

[d] Idem, vol. 12, pp. 591–594, 1886.

[e] Idem, vol. 3, pp. 223–227, 1882. Assays by J. S. Curtis.

[f] Idem, vol. 7, pp. 80–92, 1884.

[g] Seventeenth Ann. Rept. U. S. Geol. Survey, pt. 2, p. 471, 1896. Assays by L. G. Eakins.

[h] Chem. News, vol. 55, p. 17, 1887.

[i] Proc. Roy. Soc., vol. 47, p. 277, 1890.

[j] Gazz. chim. ital., vol. 36, pt. 2, p. 797, 1906.

[k] Missouri Geol. Survey, vol. 7, pp. 479–481, 1894.

According to L. Dieulafait,[a] who tested hundreds of rocks, zinc and copper are always to be detected, and they are also present in sea water. Copper salts, it will be remembered, are often found among the sublimates of Vesuvius, Stromboli, and Etna, and A. B. Lyons[b] observed copper sulphate in the crater of Kilauea. In 15 Hawaiian lavas Lyons found from 0.07 to 0.48 per cent of copper oxide; in average, 0.18 per cent. A still larger series of igneous and metamorphic rocks from British Guiana, analyzed by J. B. Harrison,[c] also yielded appreciable quantities of copper, with sometimes other heavy metals. In 36 rocks examined 6 contained no copper, 12 contained it in traces, and one, a feldspathic tuff, carried 0.13 per cent. The average percentage of copper for the entire series was 0.025. In 23 samples lead was sought for, and found in 5 of them, the maximum percentage being 0.02 per cent. Eight rocks yielded silver, from 4 to 54 grains per ton of 2,240 pounds, in average, 25.5 grains; and out of 29 rocks only 1 was free from gold. The highest gold was 43 grains per ton; the mean was 6.5 grains.

In the foregoing pages only a part of the available evidence has been presented, but it is enough to establish the point at issue. The heavy metals are widely disseminated, both in old and in recent igneous rocks, from which, by proper methods, they can be concentrated. In the laboratory of the United States Geological Survey such metals as nickel and chromium are often quantitatively estimated, as shown in the table upon page 26. Copper is determined in exceptional cases only, but indications of its presence are frequently observed. It is probably as abundant as nickel, and possibly more so. Of its wide distribution in igneous rocks there is no shadow of a doubt. From the rocks all of these metals are leached, and traces of them accumulate in the sea. They also appear in many mineral springs,[d] a fact which is capable of more than one interpretation. Such a spring may derive its contents from dispersed material, or it may rise from a segregated body of ore; its composition, therefore, merely tells us that the metalliferous compounds are more or less freely soluble. The true origin of the latter is not thereby explained.

That sulphides of the heavy metals can be dissolved in or decomposed by water alone, there is some experimental evidence. P. De Clermont and J. Frommel[e] found that sulphides of iron, nickel, co-

---

[a] Ann. chim. phys., 5th ser., vol. 18, p. 349, 1879; vol. 21, p. 256, 1880.

[b] Am. Jour. Sci., 4th ser., vol. 2, p. 424, 1896. In andesite from Lautoka, Fiji, H. S. Jenssen found 0.034 per cent of copper, on an average. Chem. News, vol. 96, p. 245, 1907.

[c] Rept. on petrography of Cuyuni and Mazaruni districts, Georgetown, Demerara, 1905. On gold and silver in diabase, French Guiana, see E. D. Levat, Ann. mines, 9th ser., vol. 13, p. 386, 1898; and also in Min. Industry, vol. 7, p. 315.

[d] See p. 147, *ante*, for examples. The traces of heavy metals which spring waters contain are often more easily detected in their sediments; that is, they become concentrated in the insoluble precipitates that spring waters often deposit.

[e] Ann. chim, phys., 5th ser., vol. 18, p. 189, 1879.

balt, antimony, arsenic, silver, and tin were attacked by boiling water, hydrogen sulphide being given off. Some were acted upon even at temperatures below 100°; As_2S_3 at 22°, FeS at 56°, Ag_2S at 89°, and Sb_2S_3 at 95°. The sulphides of copper, zinc, mercury, cadmium, gold, platinum, and molybdenum, treated in the same way, gave no evidence of decomposition.

C. Doelter's experiments [a] were conducted differently. The natural sulphides, in fine powder, were heated with water in glass tubes to 80° during periods of thirty to thirty-two days. In a second series of experiments, lasting twenty-four days, a solution of sodium sulphide was used instead of water. The following percentages of material passed into solution:

Material dissolved from natural sulphides in water and in sodium sulphide solution.

	Water alone.	With sodium sulphide
Galena	1.79	2.3
Stibnite	5.01	all.
Pyrite	2.99	10.6
Blende	.025	.62
Chalcopyrite	.1669	.11
Bournonite	2.075	3.9
Arsenopyrite	1.5	3.2

In most of these experiments, but not in all, the dissolved substance had the same composition as the original material. That is, the minerals dissolved as such, without decomposition—a conclusion that was strengthened by the observation that in most cases new crystallizations were formed.[b]

According to Doelter, then, sulphides may be dissolved and recrystallized from water alone. This is important, but not a complete indication of what occurs in nature. Natural waters, as we well know, are not pure, but charged with various dissolved salts, which exert a varying influence upon the solution of sulphides. They also contain carbonic acid, and sometimes also the stronger mineral acids; and surface waters carry dissolved oxygen. All of these impurities take part in the solution, concentration, and redistribution of metallic ores, and their effects are furthermore varied by differences of temperature. A hot water, rising from great depths and free from oxygen, produces one set of changes, a cold surface water, highly oxygenated, acts quite differently. Direct solution of ores is more likely to occur in the one case, oxidation to soluble salts

[a] Min. pet. Mitth., vol. 11, p. 319, 1890. Research continued by G. A. Binder, idem, vol. 12, p. 332, 1892.

[b] Still more recently O. Weigel (Nachrichten K. Gesell. Göttingen, Math. phys. Klasse, 1906, p. 525) has determined the solubility in pure water of the sulphides of Pb, Hg, Ag, Cu, Cd, Zn, Ni, Co, Fe, Mn, Sn, As, Sb, and Bi. All were slightly soluble.

is commonly evident in the other. The main fact, that solution is effected in one way or another, is well illustrated, not only by the composition of mineral springs, but also by the analyses of mine waters. The following analyses, with one exception, are from the laboratory records of the United States Geological Survey. All are stated in terms of parts per million.

Analyses of mine waters.

A. Water from 500-foot level of Geyser mine, Custer County, Colorado.

B. Same locality as A, from the 2,000-foot level. Contains also traces of Br, I, F, and B_4O_7. Analyses A and B by W. F. Hillebrand. Discussed by S. F. Emmons, Seventeenth Ann. Rept. U. S. Geol. Survey, pt. 2, p. 462, 1896.

C. Water from Alabama Coon mine, Joplin district, Missouri. Analysis by H. N. Stokes.[a]

D. Water from St. Lawrence mine, Butte, Montana. Analysis by Hillebrand.

E. Water from Mountain View mine, Butte, Montana. Analysis by Hillebrand. Contains a trace of arsenic.

F. Water from the Rothschönberger Stolln, Freiberg, Saxony, at its point of discharge into the Triebisch Valley. Analysis by Frenzel, here reduced to ionic form. Described by H. Müller, Jahrb. Berg. Hütt. König. Sachsen, 1885, p. 185. Discharges 479 kilograms of ZnO daily, or 175,024 kilograms per annum.[b]

	A.	B.	C.	D.	E.	F.
Cl	7.9	186.40	2.7	13.0	17.7	12.4
SO_4	43.2	161.70	6,153.2	2,672.0	71,053.3	124.8
CO_3	110.5	1,513.44	.....	.....	.....	.....
NO_3	.....	1.60	.....	.....	.....	.....
PO_4	.....	trace	.....	trace	1.5	.....
K	10.6	198.00	.5	13.1	6.8	.....
Na	36.4	719.45	49.9	39.6	41.7	.....
Li	trace	2.85	none	.....	trace	.....
Ca	37.4	146.41	345.3	132.5	307.7	46.4
Sr	.....	1.95	.....	.....	.....	.....
Mg	12.25	177.67	25.2	61.6	149.2	14.5
Al	[c] .4	1.06	142.1	83.5	85.2	.....
Fe	.7	3.50	474.6	159.8	49.8	6.6
Mn	.8	.57	1.7	12.0	13.2	.....
Ni	.....	.....	.....	.5	3.5	.....
Co	.....	.....	.....		4.6	.....
Cu	trace	.02	3.7	59.1	45,633.2	.....
Zn	.2	.34	2,412.0	852.0	411.2	8.9
Cd	.....	.....	9.0	41.1	.....	.....
Pb	trace	1.35	.....	.....	.....	.....
Sn	.....	.....	.....	17.0	.....	.....
SiO_2	25.9	24.42	107.6	47.7	67.4	18.0
	286.25	3,140.73	9,727.5	4,204.5	117,846.0	[d] 231.6
Total CO_2	.....	2,528.46	.....	23.7	8.9	.....

[a] Two other analyses of zinc-bearing mine waters from the Joplin district are reported by C. P. Williams, Am. Chemist, vol. 7, p. 286, 1877.

[b] For other analyses of mine waters see J. A. Phillips, Phil. Mag., 4th ser., vol. 42, p. 401, 1871. A. Schrauf, Jahrb. K.-k. geol. Reichsanstalt, vol. 41, p. 35, 1891. A. C. Lane, Proc. Lake Superior Mining Inst., vol. 12, p. 97, 1906. A few others have already been cited in the chapter on mineral springs. F. Pošepný (Trans. Am. Inst. Min. Eng., vol. 23, p. 240, 1893) has tabulated the occurrences of Sn, Sb, Cu, and As in mineral waters.

[c] $Al_2O_3 + P_2O_5$, 0.8 per million.

[d] 244.9 in the original.

Analysis A represents vadose or superficial water; B, water from the deep circulation. The difference in concentration is remarkable. Water E is essentially a strong solution of copper sulphate, formed by oxidation of sulphides. Such waters are common in copper mines, and from them the copper can in many cases be profitably recovered.

The phenomena of solution, then, are evidently of supreme importance in the concentration of metallic ores. This statement can be given the broadest possible construction. A magmatic ore owes its segregation to a relative insolubility in the magma. A residual or detrital ore is formed, at least in part, by the removal from a rock of the more soluble constituents, the less soluble thereby becoming concentrated. Sedimentary ores are deposited from solutions, either directly or by precipitation, and metalliferous veins represent another aspect of the same processes. The original magmatic rocks are separated, by solution or leaching, into different fractions; and then, by direct deposition, by precipitative reactions, or by metasomatic replacements, ore bodies, and especially vein fillings, are formed. In most cases, probably, the final, workable deposit is the outcome of a series of concentrations, the result of several interdependent processes, but the underlying principles are the same. By differences of solubility, the constituents of the earth's crust are separated from one another, to be laid down again under different conditions and in different places.

The two fundamental facts with which we now have to deal are the dissemination of the heavy metals in the igneous rocks and the circulation of the underground waters. Descending, meteoric waters effect some of the observed concentrations; lateral secretions bring about others, and waters ascending from unknown depths play their part in the complex of phenomena. Whether these waters have a common origin or not is unessential to the present discussion. It is held by some writers, notably by Suess, that certain of the ascending waters arise from the original magma and now see the light of day for the first time. This conception has been correlated with the notion that the heavier metals, by virtue of their high specific gravity, are concentrated at great depths, from which the solvent waters bring them to the surface.[a] Speculations of this sort are interesting, but not necessary for present purposes. The fact that the ascending, deep-seated waters are hot, and therefore more powerful as agents of solution, is, however, most pertinent.

The general principles governing the circulation of the underground waters have been elaborately discussed by Van Hise,[b] and need not be especially considered here. The arguments are mainly physical and geological, and have only partial relation to chemistry. These waters, ascending, descending, or lateral secreting, tend to

[a] See L. De Launay, Contribution à l'étude des gîtes métallifères, p. 6, 1897; and F. Pošepný, Trans. Am. Inst. Min. Eng., vol. 23, p. 206, 1893. J. H. L. Vogt (Trans. Am. Inst. Min. Eng., vol. 31, p. 125, 1901) and also C. R. Van Hise (Treatise on metamorphism: Mon. U. S. Geol. Survey, vol. 47, 1904) dissent from this view. The importance of magmatic waters as vein fillers has been recently argued by A. C. Spencer, Trans. Am. Inst. Min. Eng., vol. 36, p. 364, 1906.

[b] Op. cit., chapter 12.

gather into trunk channels, in which, sooner or later, some of the substances held in solution are deposited. Ore bodies are thus formed, but only in exceptional cases. By far the greater number of veins are barren of heavy metals, or at least so nearly barren that they need not be further described. Once in a while concentrations of heavy metals are produced, and in most cases, but not invariably, they appear in association with rocks of igneous origin.[a] This association seems to be fundamentally important, so far as the metalliferous veins are concerned, and the problem of their origin is the only one now before us. Magmatic, sedimentary, and detrital ores fall under other headings.

An igneous effusion forces its way to the surface of the earth, thereby displacing and fracturing the rocks which were in its path. As it cools and shrinks, other crevices are formed, through which also the mineralized waters can find a passage. These waters may be partly magmatic, brought with the igneous matter from the depths, or partly gathered from sedimentary material; but whatever may have been their source, they are heated, and therefore their solvent power is increased. During solidification, moreover, any water that was entangled within the molten rock is extruded, carrying its dissolved load into the open channels. A blend of waters from different sources—deep seated, superficial, and magmatic—enters the crevices of the rocks, each part of the mixture contributing its share to their filling. The solutions thus commingled are, moreover, not all alike, and therefore chemical reactions, such as double decompositions and precipitations, become possible between them. The frequent concentrations of ores at points of intersection between two veins may possibly indicate reactions of this kind. These changes are also complicated by reactions between intruded rock and the formations which it has penetrated, and they vary with variations in the latter. Some ore deposits are evidently produced in zones of contact metamorphism, especially in limestones, and the ores are then associated with such characteristic minerals as garnet, wollastonite, pyroxene, vesuvianite, and so on.[b] Aqueous solutions take part in some of these changes, penetrating the walls of the contact and bringing about metasomatic replacements.[c]

In the ascent of an igneous intrusion, with its entangled waters, the so-called pneumatolytic processes appear to have some importance. The molten magma contains gases and vapors other than the vapor

[a] See Beck's work on ore deposits. Also papers by J. F. Kemp, Trans. Am. Inst. Min. Eng., vol. 31, p. 169, 1901; vol. 33, p. 699, 1903. J. E. Spurr, idem, vol. 33, p. 288, 1903. W. H. Weed, idem, vol. 33, p. 715, 1903 W. Lindgren, idem, vol. 30, p. 578, 1900.

[b] See W. Lindgren, Trans. Am. Inst. Min. Eng., vol. 31, p. 226, 1901.

[c] Lindgren, idem, vol. 30, p. 578, 1900. These contact deposits and metasomatic alterations are fully described by Lindgren, who gives excellent summaries of the earlier literature. A later paper on ore deposition by Lindgren appears in Econ. Geol., vol. 2, p. 105, 1907.

of water, as we know from the phenomena of volcanism. Whether these gases are occluded, or evolved by reactions within the magma, is not material to the present discussion. In volcanic craters they form sublimates containing copper, iron, and other heavy metals, which often consist of chlorides. Ammonium chloride, fluorine compounds, and boric acid, which last is volatile in steam, are other common substances in volcanic emanations.

In ore formation the magmatic chlorides and fluorides probably have definite functions. In the molten rock they convert some part of the heavy metals into compounds which are volatile at high temperatures and which therefore tend to gather at the margins of the intrusions. There, being soluble in water, they pass into solution, and so find their way into the open channels wherein deposition takes place. With them other substances are deposited, forming the gangue minerals, calcite, quartz, barite, fluorite, etc., in even larger amounts.

The heavy metals, however, are not laid down as chlorides or fluorides except in rare instances; but in other forms chlorine and fluorine have acted as primary agents in bringing about their concentration, and water tends to hydrolyse the salts thus formed, other solutions react with them, and quite different compounds are precipitated. In the case of tin the oxide is commonly produced; the other metals tend to appear as sulphides. Chlorine and fluorine act only as temporary carriers of the metals, and when their work is done they enter into other combinations. Fluorine remains in a gangue mineral, fluor spar; the chlorine returns into circulation as a soluble alkaline chloride—that is, as common salt. I cite only the simplest cases.

The pneumatolytic process thus outlined is largely inferential and may not be entitled to much weight. Neither is it exclusive. We know that certain sulphides are magmatic minerals, and we have seen that they can be either dissolved or decomposed by heated waters. In the depths they would pass into solution with some evolution of hydrogen sulphide, as shown by the experiments of De Clermont and Frommel and in the researches of Doelter. The dissolved sulphides would be redeposited by the cooling solutions, and the hydrogen sulphide would serve as a precipitant for the chlorides or sulphates which we assume to have been otherwise formed. The phenomena must also vary as the magmatic waters happen to be alkaline or acid, solution predominating in the one case and decomposition in the other. Carbonated waters are to be regarded as intermediate waters from this point of view, which decompose sulphides at first and generate actively solvent solutions that come into play later. That is, a water containing alkaline carbonates and free carbonic acid should decompose the sulphides at great depths under the conditions there existing of high temperature and pressure.

Alkaline sulphide solutions would thus be formed, in which the sulphides of the heavy metals are variably soluble. In such solutions the sulphides of tin, arsenic, and antimony dissolve freely and other sulphides in very much smaller amounts. A partial separation should be thus effected, exactly as in the operations of an analytical laboratory. These suppositions, however, need to be tested by experiment; until that has been done, they are only tentative.

We can not assume that all metalliferous veins are alike in origin, and it is therefore unwise to generalize too sweepingly about them. We may, nevertheless, imagine a typical case and follow a series of concentrations throughout its probable course, beginning with the still unconsolidated magma. But magmas are different and yield very dissimilar rocks. One is mainly feldspathic, another mainly olivine, and a third solidifies to a pyroxenite. More commonly they are complex mixtures, and in their cooling a certain amount of differentiation, the segregation of certain parts, takes place.

In order to form an ore body the magma must probably be richer in heavy metals than is usually the case. We know that several sulphides exist as magmatic minerals and that they are more abundant in some places than in others, varying in this respect just as the feldspars do. In other words, the magmatic constituents are not uniformly distributed throughout the crust of the earth. A magma, then, with more than the average proportion of sulphides, rises to the surface of the earth and cools progressively. In so doing some segregation of sulphides must take place, and they become thereby concentrated at the margin of the cooling mass. The product of concentration may itself appear as a large and distinct ore body, like the Norwegian pyrrhotites, or it may be relatively trivial; but in either case a first step has been taken.

Upon this primary concentration the circulating waters may act, and indeed have been acting from the instant that cooling began. Obviously, the waters which first operate are either those which were occluded in or generated from the rising magma or which it encountered earliest in the course of its upward movement. These, therefore, are ascending waters, whatever their previous history may have been. Their condition at first is that of highly superheated and compressed steam, for they are above the critical temperature of water and can not liquefy until they have partly cooled. Below 365° they become possibly liquid and heavily charged with matter dissolved from the magma and the adjacent rocks. Solids and gases are both dissolved, and the ascending solution, slowly cooling and mingling with other solutions as it rises, gradually deposits its burden. Its channel becomes filled with various minerals, ores, and gangues, and *thus* a second stage in the concentration is completed.

Of this process in detail we can not form a clear mental picture. The superheated solutions, formed at the beginning of the ascent, are something of which experience tells us very little. We know that water, at or above its critical temperature, attacks silicates vigorously, and that it will even, as shown by C. Barus,[a] form a mutual solution with glass. But how it will act with molten rock under pressure, what sort of a solution it will then develop, we do not know. It is fair to infer that the reactions will be both energetic and complex, and that supersaturated solutions are likely to be produced; but the waters which ultimately rise to the surface as thermal springs are at moderate temperatures and have lost much of their load. Furthermore, they have been modified by other waters, and reactions may have occurred of which no certain trace remains. If organic matter has reached the solutions at any point, sulphates must have undergone reduction to sulphides, and the latter compounds would therefore appear in more than one generation and in larger quantities. A multitude of different reactions are conceivably possible, and no one set can be summarized which shall cover all conditions. Surface waters, descending and then diffusing laterally, leach great areas of rock in the belt of weathering, and so reenforce the filling of the veins. Without the concurrence of waters from all directions and for long periods of time, the development of large ore bodies would be most difficult to explain. Suppose, now, that by a complex of processes, such as have been described, segregative, solvent, pneumatolytic, and precipitative, a channel has become filled with mineral matter and transformed into a vein. Suppose also that the vein is at first a mixture of quartz and iron pyrites, containing in moderate proportions admixtures of chalcopyrite, galena, and zinc blende, with minute but perceptible traces of silver and gold. The vein rises from the zone of anamorphism, through the belt of cementation, into the belt of weathering, where a third group of transformations, a new redistribution of material, occurs. These changes can be followed without much difficulty, and their character is partially known.[b]

In the first place, the surface waters, charged with oxygen and carbonic acid, attack the outcrop of ores, oxidizing them more or less completely to sulphates. Sulphuric acid or acid salts are formed at the same time, which assist in the decomposition of the adjacent rocks. That decomposition is more than ordinarily extensive in the vicinity of metalliferous veins; and the rocks therefore acquire a higher degree of permeability to the percolating waters.

---

[a] See *ante*, p. 244.

[b] For a summary of these alterations, see R. A. F. Penrose, Jour. Geol., vol. 2, p. 288, 1894. Also De Launay's memoir, previously cited.

The sulphates thus formed differ in solubility, and are furthermore affected by other substances contained in the waters. Gold is left in the free state, in which condition it may partly dissolve in ferric solutions, but for the most part remains unchanged. Silver is converted into chloride, for chlorine is rarely absent in such alterative processes; and that compound dissolves with some difficulty. Part of the silver, if much silver is present, may be reduced to the metallic form and remain as native silver near the surface. The iron salts, which are ferrous at first, are soon oxidized to the ferric state, forming basic compounds and passing finally into hydroxide or limonite. Some iron is dissolved and carried away; in certain cases this is done completely; but generally a mass of limonite is left upon the surface, the gossan or iron cap of mining terminology. At the surface, then, there is a concentration of iron, in which a large part of the gold and possibly some silver is retained. The other metals have been washed away, more or less perfectly, and carried down to lower levels.

The sulphates of copper and zinc are very soluble; that of lead much less so. If the descending waters contain much silica, silicates like chrysocolla and calamine are likely to be formed. If carbonates are abundant in the solutions, malachite, azurite, smithsonite, and cerussite will appear. Oxides of lead and copper may also be produced, and any or all of these substances are to be found in the oxidized zone of an ore body. Below this zone the sulphate solutions meet the unaltered sulphides, and a secondary enrichment of them becomes possible.[a] The dominant sulphide, pyrite, reacts upon solutions of copper and zinc sulphates, precipitating both metals as sulphides and passing into solution as sulphate of iron. This reaction is well known and was established experimentally. Thus at the upper portion of the unoxidized ores there is a concentration of copper and perhaps of zinc, below which the original leaner ore continues to its limit, whatever that point may be. In this way some "bonanzas" originate. A separation of the metals is effected at or near the surface, and the more soluble ones are concentrated by reprecipitation below.

In this bare outline of what may be supposed to happen in the formation of a metalliferous vein, details have been purposely left out of account. Their consideration naturally follows in the succeeding pages, in which the metals are studied separately.[b]

---

[a] On secondary enrichment, see W. H. Weed, Bull. Geol. Soc. America, vol. 11, p. 179, 1899. S. F. Emmons, Trans. Am. Inst. Min. Eng., vol. 30, p. 177, 1900, and Weed, idem, p. 424. J. F. Kemp, Econ. Geol., vol. 1, p. 11, 1905. On enrichment by ascending waters, see Weed, Trans. Am. Inst. Min. Eng., vol. 33, p. 747, 1903.

[b] The ores of iron, manganese, and aluminum have been sufficiently described in the chapters upon rock-forming minerals, rock decomposition, and the sedimentary rocks.

GOLD.[a]

Although gold is one of the scarcer elements, it is widely diffused in nature. It is found in igneous rocks, sometimes in visible particles; it accumulates in certain detrital or placer deposits; it also occurs in sedimentary and metamorphic formations, in quartz veins, and in sea water.[b] A notable amount of gold is now recovered from copper ores, during the electrolytic refining of the copper. A. Liversidge[c] found traces of gold in rock salt from several localities, in quantities of about 1 to 2 grains per ton. F. Laur,[d] in Triassic rocks taken from deep borings in the department of Meurthe-et-Moselle, France, found both gold and silver. The maximum amount, in a sandy limestone, was 39 grams of gold and 245 of silver per metric ton, but most of the assays ran much lower.

Gold has been repeatedly observed as a primary mineral in igneous or plutonic rocks. G. P. Merrill[e] reports it in a Mexican granite, embedded in quartz and feldspar. W. Möricke[f] found visible gold in a pitchstone from Chile; and O. Schiebe[g] discovered it in an olivine rock from Damara Land, South Africa.

In a series of assays of rocks collected at points remote from known deposits of heavy metals, L. Wagoner[h] found the following quantities, in milligrams per metric ton, of gold and silver. The samples are Californian, except when otherwise stated.

Gold and silver in certain rocks from California, Nevada, etc.

[Milligrams per metric ton.]

	Au.	Ag.
Granite	104	7,660
Do	137	1,220
Do	115	940
Syenite, Nevada	720	15,430
Granite, Nevada	1,130	5,590
Sandstone	39	540
Do	24	450
Do	21	320
Basalt	26	547
Diabase	76	7,440
Marble	5	212
Marble, Carrara	8.63	201

[a] For a list of the Survey publications on gold and silver see Bull. No. 315, pp. 89–92, 1907.

[b] See *ante*, p. 93.

[c] Jour. Chem. Soc., vol. 71, p. 298, 1897.

[d] Compt. Rend., vol. 142, p. 1409, 1906. Also in Compt. Rend. Soc. ind. minérale, Sept.-Oct., 1906.

[e] Am. Jour. Sci., 4th ser., vol. 1, p. 309, 1896. Compare W. P. Blake, Trans. Am. Inst. Min. Eng., vol. 26, p. 290, 1896.

[f] Min. pet. Mitth., vol. 12, p. 195, 1891.

[g] Zeitschr. Deutsch. geol. Gesell., vol. 40, p. 611, 1888. For other examples see Stelzner-Bergeat, Die Erzlagerstätten, pp. 69–70. See also J. Catharinet, Eng. and Min. Jour., vol. 79, p. 127, 1905, on gold in the pegmatite of Copper Mountain, British Columbia. R. W. Brock (idem, vol. 77, p. 511, 1904) reports gold in British Columbian porphyries.

[h] Trans. Am. Inst. Minn. Eng., vol. 31, p. 808, 1901.

These figures suggest a very general distribution of gold in rocks of all kinds. J. R. Don,[a] however, in an extended investigation of the Australian gold fields, found that the deep-seated rocks contained gold only in association with pyrite. When pyrite was absent, gold was absent also. The country rocks of the vadose region, on the other hand, were generally impregnated with gold, even at a distance from the auriferous reefs, and Don supposes that the metal was probably transported in solution. This point will be discussed later.

Gold occurs principally in the free state or alloyed with other metals, such as silver, copper, mercury, palladium, rhodium, bismuth, and tellurium. Leaving detrital or placer gold out of account, its chief mineral associates are quartz and pyrite. Its connection with pyrite is so intimate that some writers have argued in favor of its existence as gold sulphide,[b] but the evidence in favor of that belief is very inadequate. No unmistakable gold sulphide has yet been found as a definite mineral species, nor is it likely to form except in an environment entirely free from reducing agents. The compounds of gold are exceedingly unstable and the metal separates from them with the greatest ease.

On the petrologic side gold is most commonly associated with rocks of the persilicic type, such as granite and its metamorphic derivatives. I refer now to its primary occurrences. It is not rare in association with dioritic rocks, but in rocks of subsilicic character it is exceedingly uncommon. Its very general presence in quartz veins is testimony in the same direction, and suggests the probability that gold is more soluble in silicic magmas than in those richer in bases. The auriferous quartz veins were probably formed in most instances from solutions; but J. E. Spurr[c] has argued that in some cases they are true magmatic segregations. This view was developed by Spurr in his studies of gold-bearing quartz from Alaska and Nevada, but it has been questioned by C. R. Van Hise[d] and others.

The composition of native gold is variable. The purest yet found, from Mount Morgan, Queensland, according to A. Leibius,[e] assayed as high as 99.8 per cent, the remainder being mainly copper with a trace of iron. Gold commonly ranges from 88 to 95 per cent, with

[a] Trans. Am. Inst. Min. Eng., vol. 27, p. 564, 1897.

[b] See, for example, T. W. T. Atherton, Eng. and Min. Jour., vol. 52, p. 698, 1891; and A. Williams, idem, vol. 53, p. 451, 1892. Williams cites an auriferous pyrite from Colorado which yielded no gold on amalgamation, but from which gold was extracted by solution in ammonium sulphide. Gold sulphide is soluble in that reagent, hence the inference that it may have been present in the ore. See also a paper by W. Skey, Trans. New Zealand Inst., vol. 3, p. 216, 1870.

[c] See papers in Trans. Am. Inst. Min. Eng., vol. 33, p. 288, 1903; vol. 36, p. 372, 1906. Also Econ. Geol., vol. 1, p. 369, 1906.

[d] Treatise on Metamorphism: Mon. U. S. Geol. Survey, vol. 47, pp. 1048–1049, 1904. See also J. B. Hastings, Trans. Am. Inst. Min. Eng., vol. 36, p. 647, 1906. Hastings regards the Silver Peak ores as deposited by ascending waters along lines of fracturing.

[e] *Proc. Roy.* Soc. New South Wales, vol. 18, p. 37, 1884.

The natural solvents of gold appear to be numerous—that is, if the recorded experiments are all trustworthy. G. Bischof[a] found that gold was held in solution by potassium silicate, and Liversidge[b] was able to dissolve the metal by digesting it with either potassium or sodium silicate under a pressure of 90 pounds to the square inch. C. Doelter[c] claims that gold is perceptibly soluble in a 10 per cent sodium-carbonate solution, and also in a mixture of sodium silicate and bicarbonate. Solutions of alkaline suphides have been found by several authorities, notably by W. Skey,[d] T. Egleston,[e] G. F. Becker,[f] and A. Liversidge,[g] to be effective solvents of gold; and Skey reports that even hydrogen sulphide attacks the metal perceptibly. All of these solvents occur in natural waters.

Solutions of ferric salts are also capable, under proper conditions, of dissolving gold. According to H. Wurtz,[h] ferric sulphate and ferric chloride are both effective. P. C. McIlhiney[i] found that the chloride acted on the metal only in presence of oxygen, which serves to render the ferric salt an efficient carrier of chlorine. Some experiments by H. N. Stokes,[j] in the laboratory of the United States Geological Survey, showed that ferric chloride and also cupric chloride dissolve gold easily at 200°. The reactions are reversible, and gold is redeposited on cooling. Ferric sulphate, according to Stokes, does not dissolve gold unless chlorides are also present. Perhaps the pseudomorph of gold after botryogen, a basic sulphate of iron, described by W. D. Campbell,[k] may have originated from some solution in ferric salts.

The usual laboratory solvent for gold, aqua regia, owes its efficiency to the liberation of free chlorine. T. Egleston[l] asserts that traces of nitrates with chlorides in natural waters can slowly dissolve the metal. J. R. Don[m] found that weak hydrochloric acid, 1 part in 1,250 of water, in presence of manganese dioxide, would take gold into solution. R. Pearce[n] heated gold and a solution containing 40 grains [illegible]mon salt to the gallon, with a few drops of sulphuric acid and [illegible]nganese dioxide, and obtained partial solution. T. A. Rick-[illegible]ted a rich Cripple Creek ore, which contained manganic

[illegible]hem. phys. Geol., 2d ed., vol. 3, p. 843.
[illegible]Soc. New South Wales, vol. 27, p. 303, 1893.
[illegible]th., vol. 11, p. 328, 1890.
[illegible]aland Inst., vol. 3, p. 216, 1870; vol. 5, p. 382, 1872.
[illegible] Min. Eng., vol. 9, p. 639, 1880–81.
[illegible]d ser., vol. 33, p. 207, 1887.
[illegible]ew South Wales, vol. 27, p. 303, 1893.
[illegible] vol. [illegible] p. 51, 1858.

[illegible]ol. 14, p. 457, 1881. Campbell's observation needs to be [illegible] in the Thames gold field, New Zealand.
[illegible] 8, p. 454, 1879–80.
[illegible] to Don, ferric salts are not effective solvents

	A.	B.	C.	D.
Au	33.95	34.77	29.35	25.16
Ag	8.21	5.87	11.74	41.87
Cu		.34		
Fe		.59		
Te	57.27	58.60	58.91	33.21
Se				trace
Mo				.08
Sb		.65		
Fe_2O_3	.12			
Insoluble	.33			
	99.88	100.82	100.00	100.32

According to V. Lenher,[a] the tellurides of gold are probably not definite compounds, but more in the nature of alloys. Attempts at the synthesis of a distinct compound failed. B. Brauner,[b] however, asserts that crystalline "polytellurides" can be formed, which dissociate upon heating, leaving the compound Au_2Te as an end product. Theoretically, the telluride Au_2Te_3 should also be capable of existence.

Although gold is primarily a magmatic mineral, it is also transported in and deposited from solutions. Many occurrences of gold indicate this fact very plainly. O. Dieffenbach,[c] for instance, mentions gold incrusting siderite at Eisenberg, near Corbach, in Germany. O. A. Derby[d] reports films of gold on limonite, from Brazil. A. Liversidge[e] found it in recent pyrite, which formed on twigs in a hot spring near Lake Taupo, New Zealand. J. C. Newbery[f] mentions gold in a manganiferous iron ore coating quartz pebbles, the quartz itself being free from gold. In the sinter of Steamboat Springs, Nevada, G. F. Becker[g] found both gold and silver; 3,403 grams of sinter gave 0.0034 of gold and 0.0012 of silver. Gold is also reported by J. M. Maclaren[h] in the siliceous sinter of the hot springs at Whakarewarewa, New Zealand. R. Brauns[i] has described gold as a cement joining fragments of quartz. The specimen of cinnabar, from a fissure in Colusa County, California, mentioned by J. A. Phillips,[j] which was covered by a later deposit of gold, is also suggestive. All of these occurrences are best interpreted on the assumption that the gold was precipitated from solution; and, indeed, they can hardly be explained otherwise.

[a] Jour. Am. Chem. Soc., vol. 24, p. 358, 1902. See also R. D. Hall and V. Lenher, idem, p. 919.
[b] Jour. Chem. Soc., vol. 55, p. 391, 1889.
[c] Neues Jahrb., 1854, p. 324.
[d] Am. Jour. Sci., 3d ser., vol. 28, p. 440, 1884.
[e] Jour. Roy. Soc. New South Wales, vol. 11, p. 262, 1877.
[f] Trans. Roy. Soc. Victoria, vol. 9, p. 52, 1868.
[g] Mon. U. S. Geol. Survey, vol. 13, p. 344, 1888.
[h] Geol. Mag., 1906, p. 511.
[i] Chemische Mineralogie, p. 406, 1896.
[j] Quart. Jour. Geol. Soc., vol. 35, p. 390, 1879.

The natural solvents of gold appear to be numerous—that is, if the recorded experiments are all trustworthy. G. Bischof [a] found that gold was held in solution by potassium silicate, and Liversidge [b] was able to dissolve the metal by digesting it with either potassium or sodium silicate under a pressure of 90 pounds to the square inch. C. Doelter [c] claims that gold is perceptibly soluble in a 10 per cent sodium-carbonate solution, and also in a mixture of sodium silicate and bicarbonate. Solutions of alkaline suphides have been found by several authorities, notably by W. Skey,[d] T. Egleston,[e] G. F. Becker,[f] and A. Liversidge,[g] to be effective solvents of gold; and Skey reports that even hydrogen sulphide attacks the metal perceptibly. All of these solvents occur in natural waters.

Solutions of ferric salts are also capable, under proper conditions, of dissolving gold. According to H. Wurtz,[h] ferric sulphate and ferric chloride are both effective. P. C. McIlhiney [i] found that the chloride acted on the metal only in presence of oxygen, which serves to render the ferric salt an efficient carrier of chlorine. Some experiments by H. N. Stokes,[j] in the laboratory of the United States Geological Survey, showed that ferric chloride and also cupric chloride dissolve gold easily at 200°. The reactions are reversible, and gold is redeposited on cooling. Ferric sulphate, according to Stokes, does not dissolve gold unless chlorides are also present. Perhaps the pseudomorph of gold after botryogen, a basic sulphate of iron, described by W. D. Campbell,[k] may have originated from some solution in ferric salts.

The usual laboratory solvent for gold, aqua regia, owes its efficiency to the liberation of free chlorine. T. Egleston [l] asserts that traces of nitrates with chlorides in natural waters can slowly dissolve the metal. J. R. Don [m] found that weak hydrochloric acid, 1 part in 1,250 of water, in presence of manganese dioxide, would take gold into solution. R. Pearce [n] heated gold and a solution containing 40 grains of common salt to the gallon, with a few drops of sulphuric acid and some manganese dioxide, and obtained partial solution. T. A. Rickard [o] treated a rich Cripple Creek ore, which contained manganic

[a] Lehrb. chem. phys. Geol., 2d ed., vol. 3, p. 843.
[b] Proc. Roy. Soc. New South Wales, vol. 27, p. 303, 1893.
[c] Min. pet. Mitth., vol. 11, p. 328, 1890.
[d] Trans. New Zealand Inst., vol. 3, p. 216, 1870; vol. 5, p. 382, 1872.
[e] Trans. Am. Inst. Min. Eng., vol. 9, p. 639, 1880–81.
[f] Am. Jour. Sci., 3d ser., vol. 33, p. 207, 1887.
[g] Proc. Roy. Soc. New South Wales, vol. 27, p. 303, 1893.
[h] Am. Jour. Sci., 2d ser., vol. 26, p. 51, 1858.
[i] Idem, 4th ser., vol. 2, p. 293, 1896.
[j] Econ. Geol., vol. 1, p. 650, 1906.
[k] Trans. New Zealand Inst., vol. 14, p. 457, 1881. Campbell's observation needs to be verified. The specimen was found in the Thames gold field, New Zealand.
[l] Trans. Am. Inst. Min. Eng., vol. 8, p. 454, 1879–80.
[m] Idem, vol. 27, p. 564, 1897. According to Don, ferric salts are not effective solvents for gold.
[n] Idem, vol. 22, p. 739, 1893.
[o] *Idem, vol. 26, p. 978, 1896.*

oxides, with a solution of ferric sulphate, sodium chloride, and a little sulphuric acid, and practically all of the gold dissolved. On immersing in this solution a fragment of black, carbonaceous shale, the gold was reprecipitated. How far solutions of this kind can be produced in nature is uncertain; but the extreme dilution of the solvents may be offset by their prolonged action. The laboratory processes all tend to accelerate the reactions. V. Lenher's observation,[a] that strong sulphuric acid, in presence of oxidizing agents, such as the dioxides of manganese and lead, dissolves gold, is probably not applicable to the discussion of natural phenomena.

The experiment by Rickard just cited is especially suggestive as illustrating the ease with which gold is redeposited from its solutions. So far as gold is concerned, the reducing agents are numberless, and many of them occur in nature. Organic matter of almost any kind will precipitate gold, and such matter is rarely, if ever, absent from the soil. Gold, therefore, although it may enter into solution, is not likely to be carried very far. On mere contact with ordinary soils it would be at once precipitated.

Gold is also thrown out of solution by ferrous salts, by other metals, and by many sulphides, especially by pyrite and galena.[b] According to Skey one part of pyrite will precipitate over eight parts of gold. The sulphides of copper, zinc, tin, molybdenum, mercury, silver, bismuth, antimony, and arsenic, and several arsenides, all act in the same way. So too does tellurium, according to V. Lenher,[c] and also the so-called tellurides of gold. If the latter were definite compounds, they could hardly behave as precipitants for one of their constituent elements.

SILVER.[d]

Silver, like gold, is widely diffused in nature. Its presence in igneous rocks, together with gold, has been shown in the preceding pages, and its existence in sea water was noted in an earlier chapter. A. Liversidge [e] found it in rock salt, seaweed, and oyster shells, while W. N. Hartley and H. Ramage [f] discovered spectroscopic traces of silver in a large number of minerals. Out of 92 iron ores of all classes only four were free from silver, and it was generally detected in manganese ores and bauxite. Blende, galena, and the pyritic ores

[a] Jour. Am. Chem. Soc., vol. 26, p. 550, 1904.

[b] See C. Wilkinson, Trans. Roy. Soc. Victoria, vol. 8, p. 11, 1866. W. Skey, Trans. New Zealand Inst., vol. 3, p. 225, 1870; vol. 5, pp. 370, 382, 1872. A Liversidge, Proc. Roy. Soc. New South Wales, vol. 27, p. 303, 1893.

[c] Jour. Am. Chem. Soc., vol. 24, p. 355, 1902. Also R. D. Hall and V. Lenher, idem, p. 919.

[d] For a list of the Survey publications on gold and silver see Bull. No. 315, pp. 89–92, 1907.

[e] Jour. Chem. Soc., vol. 71, p. 298, 1897.

[f] Idem, vol. 71, p. 533, 1897.

almost invariably contain it. Argentiferous galena, silver-lead ore, is one of the chief sources of this metal.

Unlike gold, silver occurs not only native, but in many compounds. The sulphides, sulphosalts, and halogen compounds are best known; but selenides, tellurides, arsenides, antimonides, and bismuthides also exist. These minerals or groups of minerals are best considered separately.

Native silver, like native gold, is rarely if ever pure. It commonly contains admixtures of gold, copper, and other metals in extremely variable proportions. Silver amalgam, for instance, ranges from 27.5 to 95.8 per cent of silver, with from 72.5 to 3.6 per cent of mercury. In the Lake Superior copper mines silver is often embedded in native copper, each metal being nearly pure.

In most cases native silver is a secondary mineral. It is often found in gossan, and R. Beck[a] mentions films of silver upon the scales of fossil fishes from the Mansfeld copper shales. According to J. H. L. Vogt[b] the native silver of Kongsberg is largely formed by reduction from argentite, although a derivation from proustite may also be observed. The silver thus formed is commonly filiform. In a subordinate degree crystallized silver appears as a primary deposit from solutions. Vogt regards a solution of silver carbonate or bicarbonate as the source of the metal, probably because of its association with calcite, and thinks that ferrous compounds or carbonaceous substances are the precipitants. Pyrite precipitates the silver as sulphide.

The reduction of silver and its complete precipitation in the metallic state by organic matter was long ago observed by H. de Senarmont.[c] T. A. Rickard[d] also found that it was thrown down as a metallic coating upon a black, carbonaceous shale. The reduction of the sulphide by hydrogen is also possible, but less likely to occur under natural conditions.[e] Any reaction, however, which generated nascent hydrogen in contact with silver solutions would precipitate the metal.

The nature of the silver solutions in metalliferous veins is not positively known. Apart from Vogt's suppositions, it seems probable that silver sulphate may be formed by oxidation of the sulphide. That salt, however, would almost certainly be transformed into chloride by the chlorides present in percolating waters. Silver chloride, although soluble with difficulty, is not absolutely insoluble, and very dilute solutions of it may well take part in the filling of veins. It has long been known, also, that silver is dissolved by solutions of

[a] Ore Deposits, Weed's translation, p. 371.
[b] Zeitschr. prakt. Geol., 1899, pp. 113, 177.
[c] Ann. chim. phys., 3d ser., vol. 32, p. 140, 1851.
[d] Trans. Am. Inst. Min. Eng., vol. 26, p. 978, 1896.
[e] See G. Bischof, Lehrb. chem. phys. Geol., 2d ed., vol. 3, p. 856. Also J. Margottet, Compt. Rend., vol. 85, p. 1142, 1877.

ferric sulphate, a reaction which has recently been studied by H. N. Stokes[a] in the laboratory of the United States Geological Survey. The reaction, $2Ag+Fe_2(SO_4)_3=Ag_2SO_4+2FeSO_4$, is reversible, and crystallized silver is redeposited on cooling. Stokes also found that a solution of copper sulphate, at 200°, was an effective solvent of silver, this reaction, like the other, being reversible. Pseudomorphs of cerargyrite, ruby silver, argentite, and stephanite after native silver are mentioned by Dana.[b]

The natural arsenides, antimonides, and bismuthides of silver are imperfectly known. An arsenide, Ag_3As, was described by H. Wurtz,[c] under the name huntilite. Wurtz also reported an antimonide, animikite, Ag_9Sb. Both minerals were found in the Silver Islet mine, Lake Superior. The commoner antimonide, dyscrasite, varies from Ag_3Sb to Ag_6Sb. The bismuthide, chilenite, is perhaps Ag_6Bi. All of these minerals need careful study, especially from a synthetic point of view.

Silver sulphide, Ag_2S, is found in nature in two forms—the isometric argentite, which is a common ore, and the rare orthorhombic acanthite. It is one of the easiest of the silver compounds to prepare, and is formed whenever moist hydrogen sulphide[d] comes into contact with any other silver salt, or with the metal itself. As crystallized argentite it has been prepared in several ways. J. Durocher[e] obtained it by the action of hydrogen sulphide upon silver chloride at high temperatures. J. Margottet[f] prepared argentite by passing the vapor of sulphur over silver at a low red heat. With selenium or tellurium vapor the corresponding selenide and telluride of silver were formed. J. B. Dumas[g] obtained the crystallized sulphide by the same process. F. Roessler[h] crystallized argentite and the selenide from solution in molten silver, and the selenide also from fused bismuth. C. Geitner,[i] by heating silver to 200° with a solution of sulphurous acid, obtained argentite. Silver sulphite, heated with water to the same temperature, broke down into argentite and crystallized silver. According to E. Weinschenk,[j] argentite is produced when silver acetate and a solution of ammonium sulphocyanate are heated together to 180° in a sealed tube. In this case the decomposition of the sulphocyanate yields hydrogen sulphide, which is the actually effective reagent. Finally, W. Spring[k] found that silver

[a] Econ. Geol., vol. 1, p. 649, 1906.
[b] System of Mineralogy, 6th ed., p. 20.
[c] Eng. and Min. Jour., vol. 27, pp. 55, 124, 1879.
[d] Dry hydrogen sulphide does not attack silver.
[e] Compt. Rend., vol. 32, p. 825, 1851.
[f] Idem, vol. 85, p. 1142, 1877.
[g] Ann. chim. phys., 3d ser., vol. 55, p. 147, 1859.
[h] Zeitschr. anorg. Chemie, vol. 9, p. 31, 1895.
[i] Liebig's Annalen, vol. 129, p. 358, 1864.
[j] Zeitschr. Kryst. Min., vol. 17, p. 497, 1890.
[k] *Ber. Deutsch.* chem. Gesell., vol. 16, pp. 324, 1002, 1883; vol. 17, p. 1218, 1884.

and sulphur could be forced to combine by repeated compression together of the two finely divided elements. The pressure employed was 6,500 atmospheres. Silver and arsenic also unite under the same conditions.

Some of these syntheses evidently have no exact parallel in nature. Probably the natural reactions are of the simplest kind. Sulphur, sulphur dioxide, or hydrogen sulphide acts either upon metallic silver or upon any of its naturally available compounds, solid or in solution, and the sulphide is formed. Its crystallization, which is accelerated by the laboratory methods, is presumably a question of time, aided by the slight solubility of the compound. The last remark, obviously, applies to many other sulphides also. The reduction of sulphate solutions by organic matter is another probable mode of generation.

It has already been shown that argentite is easily reduced to silver. Indeed, silver sulphide is the most readily reducible, that is, the least stable, of all the commoner sulphides. This is illustrated by its heat of formation, which is low compared with that of other sulphides. The following data, giving heats of formation from solid metal and solid sulphur, are furnished by Julius Thomsen.[a] The figures are for small calories.

Heats of formation of various sulphides.

PbS	20,430
Cu_2S	20,270
HgS	16,890
Ag_2S	5,340

On the other hand, silver is precipitated from its solutions by pyrite, chalcopyrite, galena, and other sulphides.[b] H. N. Stokes,[c] in the laboratory of the United States Geological Survey, found that marcasite, heated with silver carbonate and potassium bicarbonate solution at 180°, precipitated silver sulphide. According to R. Schneider,[d] bismuth sulphide precipitates silver sulphide from a nitrate solution. A. Gibb and R. C. Philip,[e] also working with silver nitrate solutions, found that cuprous sulphide precipitated silver sulphide, while copper or cuprous oxide threw down metallic silver. Reactions of this class doubtless assist in the secondary enrichment of ore bodies, the silver being dissolved above and redeposited below. In changes of this order the thermal values and also the differing solubilities of all the compounds taking part in the phenomena need to be considered, but the data are as yet imperfectly known.

[a] Thermochemische Untersuchungen, vol. 3, p. 455, 1883.
[b] See W. Skey, Trans. New Zealand Inst., vol. 3, p. 225, 1870.
[c] Econ. Geol., vol. 2, p. 16, 1907.
[d] Jour. prakt. Chemie, 2d ser., vol. 41, p. 414, 1890.
[e] Trans. Am. Inst. Min. Eng., vol. 36, p. 667, 1906.

The selenide of silver, naumannite, Ag_2Se, is a well-known but rare mineral. A sulphoselenide, aguilarite, Ag_4SSe, has also been described. Naumannite often contains lead, due to admixtures of the lead selenide.

Hessite is the normal telluride of silver, Ag_2Te. Stutzite, Ag_4Te, is a more doubtful substance. The synthesis of hessite by Margottet has already been mentioned. B. Brauner[a] also obtained it by the same method. R. D. Hall and V. Lenher[b] prepared the compound by reducing silver tellurite, and they also found that a telluride was precipitated by the action of tellurium upon silver solutions.

Eucairite, $CuAgSe$; stromeyerite, $CuAgS$; sternbergite, $AgFe_2S_3$; and frieseite, $Ag_2Fe_5S_8$, are rare silver-bearing minerals.

The sulphosalts formed by silver with the sulphides of arsenic, antimony, and bismuth are quite numerous. Some of them are important ores; others are mineralogical rarities; but, on account of their interrelationships, all are significant. They may be arranged as follows:

Smithite	$AgAsS_2$	Monoclinic.
Miargyrite	$AgSbS_2$	Monoclinic.
Matildite	$AgBiS_2$	(?)
Proustite	Ag_3AsS_3	Rhombohedral.
Xanthoconite	Ag_3AsS_3	Monoclinic.
Pyrargyrite	Ag_3SbS_3	Rhombohedral.
Pyrostilpnite	Ag_3SbS_3	Monoclinic.
Tapalpite[c]	Ag_3BiTe_3	Massive.
Stephanite	Ag_5SbS_4	Orthorhombic.
Pearceite	Ag_9AsS_6	Monoclinic.
Polybasite	Ag_9SbS_6	Orthorhombic.
Polyargyrite	$Ag_{24}Sb_2S_{15}$	Isometric.
Schapbachite	$Ag_2PbBi_2S_5$	Orthorhombic.
Brongniardite	$Ag_2PbSb_2S_5$	Isometric.
Andorite	$AgPbSb_3S_6$	Orthorhombic.
Schirmerite	$(Ag_2,Pb)_3Bi_4S_9$	Massive.
Diaphorite	$(Ag_2,Pb)_5Sb_4S_{11}$	Orthorhombic.
Freieslebenite	$(Ag_2,Pb)_5Sb_4S_{11}$	Monoclinic.

Several other sulphosalts of lead and copper also contain replacements of silver of considerable importance. Tennantite, $Cu_8As_2S_7$, contains up to 13.65 per cent of silver; and tetrahedrite, $Cu_8Sb_2S_7$, up to 31.3 per cent. In cosalite, $Pb_2Bi_2S_5$, as much as 15.66 per cent of silver has been found. The tin and germanium sulphosalts, canfieldite, Ag_8SnS_6, and argyrodite, Ag_8GeS_6, are very rare minerals. Small admixtures of any of these compounds with other sulphides, however, would render the latter useful ores of silver.

Several of these sulphosalts have been prepared synthetically. J. Durocher[d] claims to have obtained them by heating mixed chlorides

[a] Jour. Chem. Soc., vol. 55, p. 388, 1889.
[b] Jour. Am. Chem. Soc., vol. 24, p. 919, 1902.
[c] Contains some sulphur partly replacing tellurium.
[d] Compt. Rend., vol. 32, p. 825, 1851.

of silver and antimony, or silver and arsenic, in a current of hydrogen sulphide. Details are not given. H. de Senarmont,[a] by heating a salt of silver to temperatures ranging from 250° to 350° with a solution of an alkaline sulpharsenite or sulphantimonite in an excess of sodium bicarbonate, succeeded in producing pyrargyrite and proustite. By precipitating a solution of silver nitrate with the potassium sulphantimonate, K_3SbS_3, I. Pouget[b] obtained the amorphous compound Ag_3SbS_3, equivalent in composition to pyrargyrite. C. Doelter[c] prepared miargyrite, pyrargyrite, and stephanite by a modification of Senarmont's method. Silver chloride, mixed with a sodium carbonate solution of potassium sulphantimonate in varying proportions, was heated with hydrogen sulphide in sealed tubes to 80°–150°. Pyrargyrite was most easily formed; miargyrite appeared only once. Doelter[d] also heated silver chloride with antimony trichloride, sulphide, or oxide in hydrogen sulphide, and obtained similar results, H. Sommerlad[e] prepared pyrargyrite, miargyrite, and stephanite by heating antimony sulphide and silver chloride together. With arsenic trisulphide, proustite was formed. The same species, and also polyargyrite, were produced when the component sulphides were fused together in a stream of hydrogen sulphide. According to R. Schneider,[f] potassium bismuth sulphide, $KBiS_2$, added to a solution of silver nitrate, precipitates the compound $AgBiS_2$. This, crystallized by fusion, becomes matildite. Matildite was also made by Roessler[g] when the sulphides of silver and bismuth were allowed to crystallize together from solution in molten bismuth.

From these syntheses it is evident that the sulphosalts of silver are easily formed, and by various methods. Those which involve fusion are probably not operative in nature, for the ores under consideration are commonly associated with gangue minerals which could not be formed in that way. Quartz, calcite, fluorite, barite, etc., are vein minerals which can be deposited only from solution, and the same rule must hold for the accompanying sulphides. Solutions of silver, produced by oxidation of ores, probably react with great slowness upon sulphur compounds of arsenic, antimony, or bismuth; and the new minerals are produced under varying conditions. The nature of the primary sulphides and of the infiltrating solutions, together with conditions of concentration and temperature, determines the character of the sulphosalts to be formed. These conditions are still unknown, at least quantitatively, and so far as the

[a] Ann. chim. phys., 3d ser., vol. 32, pp. 171–173, 1851.
[b] Compt. Rend., vol. 124, p. 1518, 1897.
[c] Allgem. chem. Mineralogie, p. 152.
[d] Zeitschr. Kryst. Min., vol. 11, p. 29, 1886.
[e] Zeitschr. anorg. Chemie, vol. 15, p. 173, 1897; vol. 18, p. 420, 1898.
[f] Jour. prakt. Chemie, 2d ser., vol. 41, p. 414, 1890.
[g] Zeitschr. anorg. Chemie, vol. 9, p. 31, 1895.

natural phenomena are concerned; but the syntheses give hints which may aid in their future discovery. It is also possible that arsenical or antimonial solutions may react upon silver compounds, such as argentite or the chlorides, and so form sulphosalts of different kinds. The supposable reactions are many, and it is not easy to determine which ones have operated in any particular case.

The haloid ores of silver remain to be mentioned. These are represented by three distinct and several intermediate mineral species; the three being cerargyrite, or horn silver, AgCl; bromyrite, AgBr, and iodyrite, AgI. Embolite is a chlorobromide; iodobromite is represented by the formula 2AgCl.2AgBr.AgI; cuproiodargyrite is near $CuAgI_2$; and miersite is an isometric iodide of silver, the commoner iodyrite being hexagonal.[a]

All of these minerals are secondary, and appear for the most part in the upper levels of ore bodies. Infiltrating solutions of chlorides, bromides, or iodides act upon the oxidation products of the primary ores, and precipitate these relatively insoluble species. They are not absolutely insoluble, however, and probably crystallize very slowly from extremely dilute solutions. A form of silver chloride identical in appearance with cerargyrite was prepared by F. Kuhlmann[b] when a solution of silver nitrate was allowed to mix very gradually with aqueous hydrochloric acid. The two solutions were separated by a porous layer of asbestos, pumice, or platinum sponge, through which they slowly commingled.[c] Such a blending of solutions may take place in nature, through layers of decomposed rock substance, such as a sandy clay or a gossan.

COPPER.

The minerals of copper are much more numerous than those of silver, and represent a wider range of composition. No oxidized ores of silver are known, but copper is found not only as oxide, but also in silicates, sulphates, phosphates, arsenates, carbonates, a basic nitrate, and an oxychloride. The metal is easily oxidizable, and is also easily reduced; it therefore occurs both as native copper and in its many compounds.

Native copper is commonly, if not always, a secondary mineral, either deposited from solution or formed by the reduction of some solid compound. Pseudomorphs of copper after the oxide, cuprite, are well known; and remarkably perfect pseudomorphs after azurite,

[a] See G. T. Prior and L. J. Spencer, Mineralog. Mag., vol. 13, p. 174, 1902, for a general paper on the cerargyrite group. H. B. Kosmann (Leopoldina, vol. 30, pp. 193, 203, 1894) has discussed the formation of these ores from a thermochemical point of view. A mineral having the formula 20NaCl + AgCl has been called huantajayite.

[b] Compt. Rend., vol. 42, p. 374, 1856.

[c] H. Debray also crystallized the chloride, bromide, and iodide of silver from aqueous solutions in mercuric nitrate. Compt. Rend., vol. 70, p. 995, 1870. This process can *hardly* be a reproduction of natural conditions.

from Grant County, New Mexico, have been described by W. S. Yeates.[a] According to W. Lindgren,[b] a vein of metallic copper at Clifton, Arizona, appears to have been formed from chalcocite. Examples of this general character might be multiplied indefinitely.

T. Carnelley[c] has shown that metallic copper is perceptibly attacked and dissolved by distilled water, and much more so by saline solutions resembling those existing in nature. The direct solubility of the sulphides was considered earlier in this chapter, and also the formation of strong sulphate solutions by oxidation of pyrite ores. From solutions such as these, but very dilute, the greater deposits of native copper appear to have been formed.

In the Lake Superior region the greatest known deposits of metallic copper are found.[d] Its original home, perhaps as sulphide, was in the unaltered igneous rocks, but its concentrations are now found in the sandstones, conglomerates, and amygdaloids. In the sandstones and conglomerates it acts as a cement, and it also replaces pebbles and even bowlders a foot or more in diameter. Some of the masses of copper are enormous; one, for example, found in the Minnesota mine in 1857, weighed about 420 tons. It is associated with other minerals of hydrous origin, such as epidote, datolite, calcite, and zeolites, and calcite crystals are known which had been coated with copper, and then overgrown with more calcite. Lane also mentions a quartz crystal which had been corroded and mainly replaced by copper. Frequently the copper incloses nodules of native silver, which were evidently precipitated first and then enveloped by the baser metal. Had these metals been deposited from a fused magma they would have formed, not separately, but as an alloy. The reducing agent, according to Pumpelly, was probably some compound of iron, oxide or silicate; and R. D. Irving substantiates this opinion by citing particles of cementing copper which inclosed cores of magnetite. Pumpelly's conclusion was based upon the constant association of the Lake Superior copper with epidote, delessite, and the green earth silicates, all of which are ferriferous. H. N. Stokes[e] has found that hornblende and siderite can precipitate metallic copper from a sulphate solution heated to 200°. Under certain conditions, also, ferrous sulphate, pyrite, and chalcocite are capable, according to Stokes, of reducing cupric sulphate to the metallic state. Cop-

[a] Am. Jour. Sci., 3d ser., vol. 38, p. 405, 1889.

[b] Prof. Paper U. S. Geol. Survey No. 43, p. 101, 1905.

[c] Jour. Chem. Soc., vol. 30, p. 1, 1876. See also R. Meldrum, Chem. News, vol. 78, p. 209, 1898.

[d] See H. Credner, Neues Jahrb., 1869, p. 1. R. Pumpelly, Am. Jour. Sci., 3d ser., vol. 2, p. 348, 1871; Geol. Survey Michigan, vol. 1, pt. 2, 1873; and Proc. Am. Acad., vol. 13, p. 253, 1878. M. E. Wadsworth, Bull. Mus. Comp. Zool., vol. 7, p. 1, 1880. R. D. Irving, Mon. U. S. Geol. Survey, vol. 5, chapter 10, 1883. A. C. Lane, Rept. State Bd. Geol. Survey Michigan, 1903, p. 239.

[e] Econ. Geol., vol. 1, p. 648, 1906.

per itself reacts with cupric sulphate solutions, reducing them to cuprous form. When such a solution of cuprous sulphate is produced at a high temperature, it deposits crystallized metallic copper upon cooling.[a] In this way a hot ascending solution of cupric sulphate may dissolve copper and redeposit it at a higher, cooler level. H. C. Riddle,[b] by heating a solution of ferrous chloride, cupric chloride, and potassium bicarbonate in an atmosphere of carbon dioxide under pressure, obtained a precipitate containing metallic copper. A. Gautier[c] has shown that superheated steam will reduce cuprous sulphide, chalcocite, to the metallic state, according to the reaction—

$$Cu_2S+2H_2O=2Cu+SO_2+2H_2.$$

Some experiments conducted in the physical laboratory of the United States Geological Survey[d] are very suggestive as regards the crystallization of copper and silver. Water, ammonium chloride, and tremolite were heated together during three and a half days, at 465° to 540°, in a steel bomb lined with a silver-plated copper tube. The tube was attacked near its base, and the two metals were redeposited in separate crystals in the upper and cooler regions of the apparatus. In the lower, hotter part an alloy of silver and copper was formed.

In some cases organic matter is evidently the reducing agent. H. de Senarmont[e] showed that copper solutions were thus reduced at temperatures between 150° and 250°. R. Beck[f] mentions native copper filling the marrow cavities of fossil bones in the Peruvian sandstones of Corocoro, Bolivia. The films of copper often found in shales, as, for example, near Enid, Oklahoma,[g] were doubtless precipitated by substances of organic origin.[h]

On the other hand, copper readily undergoes oxidation, yielding cuprite, malachite, and sometimes azurite. All of these species are known to occur as coatings upon the native metal. On buried Chinese copper coins of the seventh century A. F. Rogers[i] identified cuprite, malachite, azurite, and occasional crystals of metallic copper. In the last case the oxidation had been followed by a reduction. Other similar examples are known.

---

[a] Stokes, loc. cit. See also earlier investigations cited by Stokes.

[b] Jour. Geol., vol. 9, p. 430, 1901; and Am. Chem. Jour., vol. 26, p. 377, 1901. G. Fernekes (Econ. Geol., vol. 2, p. 581, 1907) has also described the precipitation of copper from neutral chloride solutions by $FeCl_2$.

[c] Compt. Rend., vol. 142, p. 1465, 1906.

[d] Preliminary notice by F. E. Wright, Science, vol. 25, p. 389, 1907.

[e] Ann. chim. phys., 3d ser., vol. 32, p. 140, 1851.

[f] Ore Deposits, Weed's translation, p. 499.

[g] See E. Haworth and J. Bennett, Bull. Geol. Soc. America, vol. 12, p. 2, 1900.

[h] The association of copper ores, other than native copper, with organic remains is by no means rare. For example, E. J. Schmitz (Trans. Am. Inst. Min. Eng., vol. 26, p. 101, 1896) mentions impregnations of copper in fossil wood in the Permian of Texas. Percy (Metallurgy, vol. 1, p. 211, 1875) refers to a cupriferous peat in Wales which had actually been worked as an ore. Its ash contained about 3 per cent of copper.

[i] Am. Geologist, vol. 31, p. 43, 1903.

Among the less important ores of copper there are three arsenides, an antimonide, some selenides, and a telluride. The arsenides are domeykite, Cu_3As; algodonite, Cu_6As; and whitneyite, Cu_9As. Mohawkite is a domeykite containing several per cent of cobalt and nickel. Domeykite was produced artificially by G. A. Koenig,[a] who passed the vapor of arsenic over red-hot copper. Horsfordite is the antimonide, Cu_6Sb. Two selenides are known, namely, berzelianite, Cu_2Se, and umangite, Cu_3Se_2. Crookesite is a selenide of copper, silver, and thallium, and rickardite is the telluride, Cu_4Te_3. In the electrolytic refining of copper at Baltimore considerable quantities of tellurium accumulate in the slimes. It was probably diffused as telluride of copper in the original ores.

The sulphides of copper and its double sulphides with iron are the most important ores of this metal. Their composition is shown in the subjoined formulæ:

Chalcocite	Cu_2S.
Covellite	CuS.
Chalcopyrite	$CuFeS_2$.
Chalmersite [b]	$CuFe_2S_3$.
Cubanite	$CuFe_2S_4$.
Bornite [c]	Cu_5FeS_4.

To this list the rare cobalt copper sulphide, carrollite, $CuCo_2S_4$, may be added.

Several of these species have been found as furnace products, or obtained by intentional syntheses. As a furnace product, chalcopyrite has been several times reported; and A. N. Winchell [d] found it, together with bornite, thus formed, probably by sublimation, at Butte, Montana. On another product from the same locality, W. P. Headden [e] discovered cubanite. Chalcopyrite was first prepared by J. Fournet,[f] who simply fused pyrite and copper sulphide together. F. de Marigny [g] obtained bornite by fusing pyrite with copper turnings and sulphur, a process essentially identical with Fournet's, the difference in product probably depending upon the proportions of the materials used.

J. Durocher,[h] by the action of hydrogen sulphide upon the vapor of copper chloride, obtained copper sulphide in hexagonal tables. H. de Senarmont [i] heated a solution containing ferrous and cuprous

[a] Am. Jour. Sci., 4th ser., vol. 10, p. 439, 1900.

[b] See E. Hussak, Centralbl. Min. Geol. Pal., 1906, p. 332. R. Schneider (Jour. prakt. Chemie, 2d ser., vol. 52, p. 555, 1895) gives the formula here assigned to chalmersite to cubanite.

[c] Formula as established by B. J. Harrington, Am. Jour. Sci., 4th ser., vol. 16, p. 151, 1903. The older, commonly accepted formula is Cu_3FeS_3.

[d] Am. Geologist, vol. 28, p. 244, 1901.

[e] Proc. Colorado Sci. Soc., vol. 8, p. 39, 1905.

[f] Ann. mines, 3d ser., vol. 4, p. 3, 1833.

[g] Compt. Rend., vol. 58, p. 967, 1864.

[h] Idem, vol. 32, p. 825, 1851.

[i] Ann. chim. phys., 3d ser., vol. 32, p. 166, 1851.

chlorides, sodium persulphide, and a large excess of sodium bicarbonate to 250°, and so produced an amorphous precipitate having the composition of chalcopyrite. According to C. Doelter,[a] malachite, heated with hydrogen sulphide solution to 80°–90° in a sealed tube, yields covellite. Cupric oxide, heated to 200° in a stream of hydrogen sulphide, was converted into covellite; at higher temperatures chalcocite formed. By gently heating a mixture corresponding to $2CuO+Fe_2O_3$ in gaseous hydrogen sulphide, Doelter obtained chalcopyrite; and from a mixture of cuprous, cupric, and ferric oxides in the same gas at 100° to 200° he prepared bornite. E. Weinschenk[b] effected the synthesis of both chalcocite and covellite by heating cuprous or cupric solutions with ammonium sulphocyanate to 80° in sealed tubes. It must be remembered in this connection that the sulphocyanate serves merely as a source of hydrogen sulphide under pressure.

At several of the French thermal springs, Bourbonne-les-Bains, Plombières, etc., A. Daubrée[c] found Roman coins and metals, upon which, derived from the bronze, chalcocite, chalcopyrite, bornite, and tetrahedrite had formed. Similar observations were made by C. A. de Gouvenain[d] at Bourbon-l'Archambault. E. Chuard[e] found chalcopyrite upon bronze articles from the Swiss lake dwellings. In all of these instances the copper of the bronze had been attacked by waters containing either hydrogen sulphide or alkaline sulphides.

Of these sulphide ores, chalcopyrite, bornite, and chalcocite are by far the most important. Chalcopyrite and bornite are probably the primary compounds from which the others are in most cases derived, and they have been repeatedly identified as of magmatic origin. In Tuscany, according to B. Lotti,[f] pyrite, chalcopyrite, bornite, chalcocite, and sometimes blende or galena, occur in serpentinized rocks as original segregations. Similar occurrences in Servia are reported by R. Beck and Baron W. von Fircks;[g] and in dioritic rocks at Ookiep, Namaqualand, by A. Schenck.[h] In a pegmatite near Princeton, British Columbia, J. F. Kemp[i] found bornite, which had all the appearance of a primary mineral. To original sources of this kind, segregated or disseminated sulphides, the other concentrations of copper ores may reasonably be attributed. These minerals are found

[a] Zeitschr. Kryst. Min., vol. 11, pp. 34–36, 1886.

[b] Idem, vol. 17, p. 497, 1890.

[c] Ann. mines, 7th ser., vol. 8, p. 439, 1875; Compt. Rend., vol. 80, p. 461, 1875; Études synthétiques de géologie expérimentale, pp. 72–86.

[d] Compt. Rend., vol. 80, p. 1297, 1875.

[e] Idem, vol. 113, p. 194, 1891.

[f] Bull. Soc. géol. Belg., vol. 3, Mém., p. 179, 1889.

[g] Zeitschr. prakt. Geol., 1901, p. 321.

[h] Zeitschr. Deutsch. geol. Gesell., vol. 53, Verhandl., p. 64, 1901. See also W. H. Weed, Eng. and Min. Jour., vol. 79, p. 272, 1905.

[i] Trans. Am. Inst. Min. Eng., vol. 31, p. 182, 1901. See also J. Catherinet, Eng. and Min. Jour., vol. 79, p. 125, 1905.

also in veins, in contact zones, and as impregnations or replacements in sedimentary rocks, but the home of the copper in the first place must have been in rocks of igneous origin. To these primitive ores the syntheses by fusion may have some relation; secondary depositions originated by other methods.

From chalcopyrite or bornite, commonly admixed with pyrite, the other ores of this group are generated. At a locality in the Altai Mountains, says P. Jereméef,[a] every stage of transition from chalcopyrite to chalcocite may be observed. In the secondary enrichment of copper ores, pyrite plays an important part. Cupric solutions, formed by oxidation of ores in the upper levels of an ore body, react upon pyrite, and chalcocite is formed. This reaction has been partially studied by H. V. Winchell,[b] who treated cupriferous pyrite with dilute solutions of copper sulphate and sulphur dioxide and obtained films of cuprous sulphide. The sulphides of arsenic, lead, and zinc precipitated copper sulphide from sulphate in the same way. Chalcocite is thus formed both from pyrite and zinc blende, according to W. Lindgren,[c] at Clifton and Morenci, in Arizona. Chalcocite itself alters into chalcopyrite, bornite, and covellite,[d] the last species being almost invariably of secondary origin. Covellite heated with a solution of sodium bicarbonate was found by H. N. Stokes[e] to yield chalcocite; and chalcocite reacts with copper sulphate to form both covellite and native copper. The precipitation of chalcocite by pyrite was also verified by Stokes.[f] In short, these minerals are quite generally convertible one into another by very varied reactions, and their paragenesis, therefore, must be studied independently for each deposit in which they occur.[g] No simple rules can be formed to cover all cases, and a part of the difficulty arises from the fact that many of the reactions are reversible.

Among the sulphosalts there are a number containing copper, as follows:

Chalcostibite	$CuSbS_2$.
Emplectite	$CuBiS_2$.
Stylotypite[h]	Cu_3SbS_3.
Bournonite	$CuPbSbS_3$.
Wittichenite	Cu_3BiS_3.
Aikenite	$CuPbBiS_3$.

[a] Zeitschr. Kryst. Min., vol. 31, p. 508, 1899.

[b] Bull. Geol. Soc. America, vol. 14, p. 269, 1903. See also T. T. Reed, Bull. Am. Inst. Min. Eng., March, 1906, p. 261, and E. C. Sullivan, idem, January, 1907, p. 143.

[c] Prof. Paper U. S. Geol. Survey No. 43, pp. 182–186, 1905.

[d] See Dana's System of Mineralogy, 6th ed., p. 56.

[e] Econ. Geol., vol. 2, p. 14, 1907.

[f] Bull. U. S. Geol. Survey No. 186, p. 44, 1900.

[g] At Copper Mountain, British Columbia, according to Kemp (Econ. Geol., vol. 1, p. 11, 1905), the original ore was bornite; and from that mineral covellite with limonite, then chalcocite, and finally chalcocite with chalcopyrite were successively derived. See also J. Catharinet, Eng. and Min. Jour., vol. 79, p. 125, 1905.

[h] Copper partly replaced by silver and iron.

Enargite	Cu_3AsS_4.
Famatinite	Cu_3SbS_4.
Tennantite	$Cu_8As_2S_7$.
Tetrahedrite	$Cu_8Sb_2S_7$.
Klaprotholite	$Cu_6Bi_4S_9$.
Epigenite [a]	$Cu_7As_2S_{12}$.
Cuprobismutite	$Cu_6Bi_8S_{18}$.

The foregoing formulæ are typical, and make no allowance for the frequent replacements of copper by other metals, or of bismuth, antimony, and arsenic by one another. For example, there are intermediate mixtures between tennantite and tetrahedrite, and bismuth, presumably as $Cu_8Bi_2S_7$, is sometimes present in them. There are also varieties of these minerals containing very notable proportions of silver, mercury, zinc, or lead; but all reduce to the same general type of formula.

R. Schneider,[b] by passing hydrogen sulphide into a solution containing bismuth trichloride and cuprous chloride, obtained a precipitate having the composition of wittichenite. By subsequent fusion this product assumed the character of the natural mineral. In a later investigation [c] he treated a solution of cuprous chloride with the potassium salt $KBiS_2$, and produced a compound which, after special purification and fusion, resembled emplectite. He also prepared emplectite by fusing cuprous sulphide and bismuth sulphide together. The synthesis of bournonite was effected by C. Doelter [d] when a proper mixture of the chlorides or oxycompounds of copper, lead, and antimony was heated in a stream of hydrogen sulphide to a temperature below redness. Above that temperature the antimony compounds volatilize. Evidently the sulphosalts of arsenic and antimony can be generated only at relatively low temperatures. By heating cuprous chloride with antimony sulphide to 300°, H. Sommerlad [e] prepared chalcostibite. Another preparation, corresponding to $Cu_2Sb_4S_7$, was similarly obtained. By fusing together their component elements, in proper proportion, F. Ducatte [f] obtained emplectite, aikenite, and wittichenite.

Of these sulphosalts, only enargite, tetrahedrite, tennantite, and bournonite are at all common. The other species are rarities. Enargite is an important ore at Butte, Montana, and in the Tintic mines, Utah, it is the parent of a number of rare copper arsenates. Of the latter class, produced by the oxidation of enargite, W. F. Hillebrand [g] has identified olivenite, erinite, tyrolite, chalcophyllite, cli-

[a] Copper partly replaced by iron.
[b] Pogg. Annalen, vol. 127, p. 316, 1866.
[c] Jour. prakt. Chemie, ser. 2, vol. 40, p. 564, 1889.
[d] Zeitschr. Kryst. Min., vol. 11, p. 38, 1886.
[e] Zeitschr. anorg. Chemie, vol. 18, p. 420, 1898.
[f] Thesis, Univ. Paris, 1902.
[g] Bull. U. S. Geol. Survey No. 20, 1885, and No. 55, 1889.

noclasite, mixite, conichalcite, and chenevixite. Several other natural arsenates of copper are known, and a number of phosphates; but they need no further consideration here.

The two oxides of copper, cuprite, Cu_2O, and tenorite, CuO, are well-known ores of secondary origin. Cuprite, which is by far the more common, has been repeatedly observed as a furnace product,[a] and also as an incrustation upon ancient objects of copper or bronze.[b] Both compounds are easily prepared synthetically. Crednerite is another oxidized compound, having the formula $Cu_3Mn_4O_9$. An earthy oxide of manganese containing copper is known as lampadite.

Cuprous chloride, nantokite, $CuCl$, and the iodide, marshite, CuI, are rare minerals of slight importance. The oxychloride, atacamite, $Cu_2Cl\ (OH)_3$, is more common, and in Chile it has some significance as an ore.[c] Several syntheses of it have been reported. F. Field[d] obtained atacamite by the action of calcium hypochlorite upon a solution of copper sulphate. C. Friedel[e] obtained it by heating a solution of ferric chloride with cuprous oxide to 250°. Neither of these syntheses, however, corresponds to any probable process in nature. The observed development of atacamite upon ancient copper and bronze gives a better notion of its genesis. G. Tschermak[f] reports an alteration of atacamite to malachite, and has shown that the change can be artificially reproduced when the oxychloride is slowly digested with sodium bicarbonate. Pseudomorphs of chrysocolla after atacamite have been described by C. Bärwald.[g]

The sulphates of copper, normal, basic, and double, are represented by a number of mineral species, but only two of them are important. These are the normal salt, chalcanthite, $CuSO_4.5H_2O$; and the basic brochantite, $Cu_4SO_4(OH)_6$. Chalcanthite is deposited in crystalline form by the evaporation of cupriferous mine waters, and in some localities it is actually a workable ore. For example, at Copaquire, Chile, according to H. Oehmichen,[h] chalcanthite is found in significant quantities as an impregnation in partially decomposed granitic rocks, associated with some malachite, azurite, and chrysocolla. Pyrite and chalcopyrite are also present, the oxidation of the latter mineral having furnished the sulphate. Brochantite, a rarer species, appears to be more common than is generally supposed. W. Lindgren[i] has called attention to its presence in the Clifton-Morenci mines of Arizona, where it occurs in fibrous forms which might easily be

[a] See, for example, A. Arzruni, Zeitschr. Kryst. Min., vol. 18, p. 58, 1891.

[b] In addition to cases already cited, see A. Lacroix, Bull. Soc. min., vol. 6, p. 175.

[c] For a description of an atacamite ore body, see J. A. W. Murdoch, Trans. Inst. Min. Met., vol. 9, p. 300, 1901.

[d] Phil. Mag., 4th ser., vol. 24, p. 123, 1862.

[e] Compt. Rend., vol. 77, p. 211, 1873.

[f] Jahrb. K.-k. geol. Reichsanstalt, vol. 23, Min. Mitth., p. 41.

[g] Zeitschr. Kryst. Min., vol. 7, p. 169, 1883.

[h] Zeitschr. prakt. Geol., 1902, p. 147.

[i] Prof. Paper U. S. Geol. Survey No. 43, p. 119, 1905.

mistaken for malachite. F. Field[a] prepared brochantite artificially by boiling a solution of copper sulphate with a very small quantity of caustic potash. S. Meunier[b] obtained it when copper sulphate solution was allowed to act during eleven months upon fragments of galena. Apparently, brochantite is easily formed by natural reactions.

Two basic carbonates of copper are common secondary ores. They are malachite, $Cu_2(OH)_2CO_3$, and azurite, $Cu_3(OH)_2(CO_3)_2$. Both species are formed in the upper portions of ore deposits, by the action of carbonated waters upon copper compounds, or by reactions between cupreous solutions and limestones. They also are found in the patina of ancient bronzes. A. de Schulten[c] prepared malachite by heating precipitated copper carbonate with a solution of ammonium carbonate on a water bath during eight days. Later,[d] upon heating a solution of copper carbonate in carbonated water, he obtained a precipitate of malachite. L. Michel[e] reproduced azurite, together with the basic nitrate, gerhardtite, by leaving a solution of copper nitrate in contact with fragments of Iceland spar for several years.

Two silicates of copper, dioptase and chrysocolla, are well-known minerals. Dioptase, CuH_2SiO_4, is rare; chrysocolla, $CuSiO_3.2H_2O$, is common. A. C. Becquerel[f] obtained dioptase artificially by allowing a solution of potassium silicate to diffuse very slowly into one of copper nitrate. Chrysocolla is probably formed by the action of percolating waters, carrying silica, upon other soluble compounds of copper. Possibly, also, it may be produced during processes of secondary enrichment. E. C. Sullivan[g] has shown that powdered shale, feldspar, biotite, etc., will withdraw copper from sulphate solutions, the reaction being one of double decomposition. The ordinary silicates lose alkalies or alkaline earths, which pass into solution and are replaced by copper. The cupriferous product may be partly silicate and partly hydrous oxides, but its investigation is as yet incomplete.

MERCURY.

Unlike gold, silver, and copper, mercury appears to be not widely diffused in nature, although it must be admitted that minute traces of the element are easily overlooked. Very small quantities of the precious metals can be determined by fire assay, but the volatility of mercury prohibits its detection by such simple means.

[a] Phil. Mag., 4th ser., vol. 24, p. 123, 1862.
[b] Compt. Rend., vol. 86, p. 686, 1878.
[c] Idem, vol. 110, p. 202, 1890.
[d] Idem, vol. 122, p. 1352, 1896.
[e] Bull. Soc. min., vol. 13, p. 139, 1890.
[f] Compt. Rend., vol. 67, p. 1081, 1868.
[g] Econ. Geol., vol. 1, p. 67, 1905. Complete report in Bull. U. S. Geol. Survey No. 312, 1907.

Apart from the natural amalgams of silver and gold, which have already been mentioned, mercury occurs in the following minerals:

Native mercury	Hg.
Cinnabar	HgS.
Metacinnabarite [a]	HgS.
Tiemannite	HgSe.
Coloradoite	HgTe.
Onofrite	Hg(S,Se).
Lehrbachite	HgSe+PbSe.
Livingstonite	$HgSb_4S_7$.
Montroydite	HgO.
Calomel	Hg_2Cl_2.
Terlinguaite	Hg_2ClO.
Eglestonite	Hg_4Cl_2O.

To these must be added kleinite, a curious sulphato-chloride of one of the mercurammonium bases. Ammiolite and barcenite are antimonates or antimonites of mercury, of uncertain composition. The native iodide of mercury is said to exist, but its character is more than doubtful. Mercury is also found in some tetrahedrite, in proportions varying as high as 17 per cent.

Very few of these minerals have any economic significance. Cinnabar is almost the sole ore of mercury, although the native metal is sometimes found in notable quantities. In some of the California mines metacinnabarite, the black sulphide, was once abundant, and tiemannite, the selenide of mercury, was commercially worked at one time in the Lucky Boy claim in Utah.[b] Livingstonite is a workable ore at Huitzuco in Mexico, and barcenite is a substance produced by its oxidation.[c] Montroydite, terlinguaite, eglestonite, and kleinite are secondary minerals, which occur in small quantities as derivatives of cinnabar, in the mines of Brewster County, Texas.[d] Calomel has been found at several localities, but always as a secondary species.

Mercuric sulphide, as shown in the list of mineral species, occurs in two forms—the red, rhombohedral cinnabar and the black, iso-

---

[a] Guadalcazarite is metacinnabarite containing a little zinc.

[b] See G. F. Becker, Mon. U. S. Geol. Survey, vol. 13, p. 385, 1888.

[c] E. Halse (Trans. North of England Inst. Min. and Mech. Eng., vol. 45, p. 72, 1895–96) has described this locality. He ascribes the formation of the ores to solfataric action. J. Mactear (Trans. Inst. Min. and Met., vol. 4, p. 69, 1895), H. F. Collins (idem, p. 120), and J. D. Villarello (Mem. Soc. cient. Ant. Alzate, vol. 19, p. 94, 1902; vol. 20, p. 389, 1903; and vol. 23, p. 395, 1906) have also described the Mexican quicksilver deposits. Mactear regards them all as of aqueous and probably of thermal origin.

[d] See A. J. Moses, Am. Jour. Sci., 4th ser., vol. 16, p. 253, 1903. Kleinite was erroneously described by A. Sachs, Sitzungsb. Akad. Berlin, 1905, p. 1091. Its true composition was first indicated by Hillebrand, Am. Jour. Sci., 4th ser., vol. 21, p. 85, 1906, and later confirmed by Sachs, Centralbl. Min. Geol. Pal., 1906, p. 200. For data concerning the Terlingua and other deposits of Brewster County, see B. F. Hill, Am. Jour. Sci., 4th ser., vol. 16, p. 251, 1903; E. P. Spalding, Eng. and Min. Jour., vol. 71, p. 749, 1901; R. T. Hill, idem, vol. 74, p. 305, 1902; W. B. Phillips, idem, vol. 77, p. 160, 1904; vol. 18, p. 212, 1904; M. P. Kirk and J. W. Malcolmson, idem, vol. 77, p. 684, 1904; and W. P. Blake, Trans. Am. Inst. Min. Eng., vol. 25, p. 68, 1896. For a full discussion, with analyses, of the composition of the Terlingua minerals, see W. F. Hillebrand and W. T. Schaller, Jour. Am. Chem. Soc., vol. 29, p. 1180, 1907.

metric metacinnabarite. To the one species the artificial product vermilion corresponds, while the ordinary precipitated sulphide, familiar to all analysts, is amorphous and black. Vermilion is prepared by many processes, which differ in detail, but can be referred to two simple types.[a] Mercury and sulphur, under the influence of heat, unite directly, and upon subliming the product the scarlet pigment is obtained. The other general process is based upon the fact that the black sulphide, when acted upon by solutions of alkaline sulphides, can be converted into the red form. To these fundamental processes, the wet and the dry, the various syntheses of crystalline cinnabar correspond, with the wet methods predominating.

According to Fouqué and Lévy,[b] J. Durocher obtained cinnabar by the action of hydrogen sulphide upon mercuric chloride at a red heat. They also state that Deville and Debray prepared the mineral by heating the black precipitated sulphide with hydrochloric acid in a sealed tube at 100°.

C. Doelter's experiments[c] were also conducted in sealed tubes. Crystals of cinnabar were formed when metallic mercury was heated with hydrogen sulphide at 70° to 90° during six days. By heating mercury with a solution of hydrogen sulphide on a water bath he also produced both cinnabar and the black modification.

Several syntheses of cinnabar are based upon the solubility of mercuric sulphide in alkaline-sulphide solutions. M. C. Mehu[d] found that the mercuric compound was insoluble in either sodium hydroxide or sodium sulphide, but soluble in a mixture of the two. On dilution, the mixture deposited the black sulphide; but upon the passage of carbon dioxide through the solution the red modification, cinnabar, was formed. According to S. B. Christy,[e] amorphous mercuric sulphide, heated in a sealed tube with alkaline solutions into which hydrogen sulphide had been passed, is converted, at temperatures between 200° and 250°, into cinnabar. This reaction is retarded by the presence of carbon dioxide. The black sulphide, by five hours of heating to 180° with a solution of potassium sulphydrate, was also transformed into cinnabar. A similar transformation of vermilion into cinnabar is also reported by A. Ditte.[f] When an excess of vermilion is slowly acted upon by a solution of potassium sulphide it gradually changes into the crystallized mineral. The reactions, as interpreted by Ditte, are rather complex, and involve the formation and decomposition of two double sulphides, K_2HgS_2 and $K_2Hg_3S_6$.

[a] A good summary of the individual methods for the preparation of vermilion is given in Watts' Dict. Applied Chem., vol. 2, article "Mercury."

[b] Synthèse des minéraux et des roches, p. 313. These data seem not to have been published previously, but to appear for the first time in the volume cited.

[c] Zeitschr. Kryst. Min., vol. 11, p. 33, 1886.

[d] Jahresber. Chemie, 1876, p. 282.

[e] Am. Jour. Sci., 3d ser., vol. 17, p. 453, 1879.

[f] Compt. Rend., vol. 98, pp. 1271, 1380, 1884.

The results are also modified by variations in temperature and in the concentration of the solutions employed. J. A. Ippen's[a] observations resemble those of Christy. The black precipitated sulphide of mercury, heated in a sealed tube with a solution of sodium sulphide for two months below 45°, became crystallized as cinnabar. The same black sulphide, similarly treated with hydrochloric acid, failed to yield the red form.

L. L. de Koninck[b] found that mercuric sulphide is very soluble in concentrated solutions of the alkaline sulphides, and also in the sulphides of calcium, strontium, and barium, but not in solutions of sulphydrates. Upon slow dilution of the mercuric solutions thus obtained, red crystalline cinnabar was precipitated. Upon rapid dilution, the black amorphous sulphide was thrown down.

E. Weinschenk[c] prepared cinnabar by a process remotely akin to those employed by Durocher and Doelter. A solution of mercuric chloride and ammonium sulphocyanate was heated in a sealed tube from four to six days at a temperature between 230° and 250°. Both cinnabar and a black sulphide were obtained. In this case the ammonium sulphocyanate merely served as a generator of hydrogen sulphide, which was the active reagent.

Finally, a crystalline mass resembling livingstonite was prepared by A. L. Baker,[d] who fused the sulphides of mercury and antimony together in an atmosphere of carbon dioxide.

It will be noticed that several of the syntheses of cinnabar involve the solubility of mercuric sulphide in solutions of alkaline sulphides or sulphydrates.[e] On this subject, apart from synthetic considerations, there is a copious literature, and the earlier observations are by no means concordant. Even the recent data appear to be often contradictory. De Koninck, for instance, as already cited, found that the sulphide was insoluble in alkaline sulphydrates; but according to G. F. Becker,[f] this statement is true only for cold solutions. Mercuric sulphide, heated with a solution of sodium sulphhydrate on the water bath, dissolves, doubtless forming a double salt of the formula $HgS.nNa_2S$. Salts of this type must be produced whenever mercuric sulphide is dissolved in an alkaline solution, and Ditte's researches have told us something of their nature. The solubility of the mercuric sulphide manifestly depends upon considerations of temperature, pressure, concentration, and the nature of the solutions

[a] Min. pet. Mitth., vol. 14, p. 114, 1894.

[b] Ann. Soc. géol. Belg., vol. 18, p. xxv, 1891.

[c] Zeitschr. Kryst. Min., vol. 17, p. 498, 1890.

[d] Cited by Dana, System of Mineralogy, p. 110, from Chem. News, vol. 42, p. 196, 1880.

[e] According to G. A. Binder (Min. pet. Mitth., vol. 12, p. 332, 1892), even distilled water, acting on cinnabar for five weeks at 90°, will dissolve traces of the mineral.

[f] Am. Jour. Sci., 3d ser., vol. 33, p. 199, 1887. In detail, with full summaries of earlier work, in Mon. U. S. Geol. Survey, vol. 13, chapter 15, 1888. Also, preliminary, in Eighth Ann. Rept. U. S. Geol Survey, pt. 2, p. 985, 1889.

employed, whether neutral salts, sulphydrates, or polysulphides. That mercuric sulphide is precipitated again by dilution has been shown by various observers, and Becker[a] reports admixtures of metallic mercury in the sulphide thus thrown down. Here, then, we have a possible explanation of the frequent association of free mercury and the black metacinnabarite, although relief of pressure may be in some cases the equivalent of dilution as a precipitant. Organic matter, also, is a probable agent of reduction, by which the metal is liberated. Bituminous substances, such as idrialite, napalite, etc., are commonly associated with cinnabar; and at the Phœnix mine in California an inflammable gas issuing from cracks in the rocks was found by W. H. Melville[b] to have the following composition:

Composition of gas at Phoenix mine.

CO_2	0.74
CH_4	61.49
N_2	31.44
O_2	6.33
	100.00

The hydrocarbon CH_4, it must be observed, is the first member of the paraffin series, to which some bitumens belong. Becker[c] has shown that hydrocarbons will precipitate mercuric sulphide from its alkaline solutions, first, probably, as metacinnabarite, which is afterwards slowly transformed into cinnabar. Another suggestion, due to A. Schrauf,[d] who has studied the occurrence of mercury ores in Idria, is that the metal may be liberated by the direct dissociation of cinnabar vapor. He also ascribes the formation of some metacinnabarite to the action of hydrogen sulphide upon native mercury. Here again we are reminded that the same point may be reached by more than one road.

According to Becker,[e] the chief deposits of mercurial ores are all in the neighborhood of igneous rocks, from which, it is highly probable, they were originally derived. The deep-seated granites, in his opinion, form the principal source of the mercury. The ore bodies in some cases fill fissures, fractures, or cavities in rocks, the latter being commonly of sedimentary character; and in other instances the cinnabar forms impregnations in sandstone or limestone. The ores are commonly associated with pyrite or marcasite, sulphur,

[a] Loc. cit.

[b] Mon. U. S. Geol. Survey, vol. 13, p. 373, 1888.

[c] Mineral Resources U. S. for 1892, p. 139, U. S. Geol. Survey, 1893.

[d] Jahrb. K.-k. geol. Reichsanstalt, vol. 41, pp. 383, 396, 1892. Schrauf gives many citations of literature relative to mercury, and especially to the mines of Idria.

[e] Mon. U. S. Geol. Survey, vol. 13, 1888, and also, briefly, in Mineral Resources U. S. for 1892, p. 139. In the monograph, Becker has summed up the conditions at all important localities as known in 1887.

calcite, barite, gypsum, opal, quartz, and other secondary minerals, and show distinct evidence that they have been brought up from below in solution.[a] In many cases, if not in all, the evidence of hydrous or solfataric origin is very clear. A. Liversidge,[b] for example, reports mercury and mercuric sulphide in hot-spring deposits near Ohaiawai, New Zealand; and in 3,403 grams of a sinter from Steamboat Springs, Nevada, Becker and Melville[c] found 0.0070 gram of HgS. In Becker's opinion alkaline solutions containing sulphides are the natural solvents of the mercurial compounds; although V. Spirek,[d] describing the deposits at Monte Amiata, Tuscany, suggests that the mercury was first dissolved as sulphate and precipitated later by alkaline polysulphides. For this supposition there seems to be little or no positive evidence. At Idria A. Schrauf[e] found no indications of the existence of alkaline thermal springs—a bit of negative testimony which may or may not be important. It is not necessary, however, to assume that the mercurial solutions have been the same at all localities. In fact, they must have varied both in their chemical composition and in the physical conditions under which they came to the surface. Even the differences in the rocks through which the solutions travel would modify their properties.

ZINC AND CADMIUM.

Zinc, as has been shown in the earlier portions of this chapter, is widely diffused in the rocks, and it also occurs in minute proportions in sea water. Cadmium is found associated with zinc, and the very rare metals gallium and indium are also obtained from zinc ores.

---

[a] In addition to Becker's monograph, see J. A. Phillips, Quart. Jour. Geol. Soc., vol. 35, p. 390, 1879; and J. Le Conte and W. B. Rising, Am. Jour. Sci., 3d ser., vol. 24, p. 23, 1882, on Sulphur Bank, California. Le Conte (idem, vol. 25, p. 424, 1883) has discussed the deposits at Steamboat Springs, Nevada. See also, on Californian quicksilver ores, W. Forstner, Eng. and Min. Jour., vol. 78, pp. 385, 426, 1904; and in Bull. No. 27, California State Mining Bureau. Wendeborn (Berg. u. hüttenm. Zeitung, vol. 63, p. 274, 1904) has described mercury deposits in Oregon; and G. F. Monckton (Trans. Inst. Min. Eng. (British), vol. 27, p. 463, 1904) those of British Columbia. For a recent study of the mercury mines at Mount Avala, Servia, see H. Fischer, Zeitschr. prakt. Geol., vol. 14, p. 245, 1906. For an account of the mines at Almaden, Spain, see H. Kuss, Ann. mines, 7th ser., vol. 13, p. 39, 1878. On Huancavelica, Peru, see A. F. Umlauff, Bol. Cuerpo ingen. minas Peru, No. 7, 1904. F. Katzer (Berg. u. hüttenm. Jahrbuch, vol. 55, p. 145, 1907) has described the mercury deposits of Bosnia. A list of the principal mercury deposits of the world, by L. Demaret, is given in Ann. des mines de Belgique, vol. 9, p. 35, 1904.

[b] Jour. Roy. Soc. New South Wales, vol. 11, p. 262. See also J. Park, Trans. New Zealand Inst., vol. 38, p. 27, 1904. Park cites another memoir by A. P. Griffiths, in Trans. New Zealand Inst. Min. Eng., vol. 2, p. 48.

[c] Mon. U. S. Geol. Survey, vol. 13, p. 344, 1888.

[d] Zeitschr. prakt. Geol., 1897, p. 369; idem, 1902, p. 297. Spirek gives references to other literature concerning Monte Amiata. See also R. Rosenlecher, Zeitschr. prakt. Geol., 1894, p. 337, on this and other Tuscan deposits. On the mines of Vallalta-Sagron, see A. Rzehak, idem, 1905, p. 325.

[e] Jahrb. K.-k. geol. Reichsanstalt, vol. 41, p. 379, 1892.

Although native zinc has been several times reported, its existence is doubtful. None of the occurrences is completely authenticated. The fundamental ore of zinc is the sulphide, ZnS, known as sphalerite, blende, or black-jack when crystallized in the isometric system, or as wurtzite when it is hexagonal. Cadmium is found almost exclusively as the sulphide, ZnS, or greenockite, which is also hexagonal.[a] Many massive blendes are really mixtures of sphalerite and wurtzite.[b] The rare mineral voltzite is an oxysulphide of zinc, 4ZnS.ZnO.

Sphalerite, wurtzite, and greenockite have all been prepared synthetically, and wurtzite has been repeatedly observed as a furnace product.[c] According to H. de Senarmont,[d] sphalerite is formed when zinc solutions are heated in sealed tubes in an atmosphere of hydrogen sulphide—a method which was also employed by H. Baubigny.[e] J. Durocher[f] prepared sphalerite by heating zinc chloride in a stream of hydrogen sulphide. Cadmium chloride treated in the same way gave greenockite.

By fusing precipitated cadmium sulphide with potassium carbonate and sulphur E. Schüler[g] obtained crystals of greenockite. This observation has since been verified by R. Schneider.[h] H. Sainte-Claire Deville and H. Troost[i] fused zinc sulphate, calcium fluoride, and barium sulphide together, and produced crystals of wurtzite. With cadmium sulphate greenockite was formed. They also obtained wurtzite by passing hydrogen over red-hot zinc sulphide. The latter was decomposed, forming zinc vapor and hydrogen sulphide, which reacted in the cooler parts of the apparatus to produce the crystalline mineral. Wurtzite and greenockite were prepared by T. Sidot[j] when zinc or cadmium oxide was heated in the vapor of sulphur. In another paper[k] he states that amorphous zinc sulphide, heated in an atmosphere of nitrogen or of sulphur dioxide, crystallizes into wurtzite. P. Hautefeuille[l] heated zinc and cadmium sulphide under a layer of powdery alumina; the two compounds volatilized and were redeposited on the surface of the alumina as wurtzite or greenockite. He also found that blende, heated to redness, was transformed into wurtzite. R. Lorenz[m] obtained wurtzite and

[a] A basic carbonate of cadmium and the crystallized oxide, CdO, are recently discovered minerals.

[b] See J. Noelting, Zeitschr. Kryst. Min., vol. 17, p. 220, 1890.

[c] See W. Stahl, Berg. u. hüttenm. Zeitung, 1888, p. 207; H. Förstner, Zeitschr. Kryst. Min., vol. 5, p. 363, 1881; and H. Traube, Neues Jahrb., Beil. Bd. 9, p. 151, 1894.

[d] Compt. Rend., vol. 32, p. 409, 1851. The description of the process is very vague.

[e] See L. Bourgeois, Reproduction artificielle des minéraux, p. 28.

[f] Compt. Rend., vol. 32, p. 825, 1851.

[g] Liebig's Annalen, vol. 87, p. 34, 1853.

[h] Pogg. Annalen, vol. 149, p. 391, 1873.

[i] Compt. Rend., vol. 52, p. 920, 1861.

[j] Idem, vol. 62, p. 999, 1866.

[k] Idem, vol. 63, p. 188, 1866.

[l] Idem, vol. 93, p. 824, 1881.

[m] *Ber. Deutsch. chem. Gesell.*, vol. 24, p. 1501, 1891.

greenockite by acting on the vapor of zinc or cadmium with hydrogen sulphide. This process recalls that of Deville and Troost.

Two hydrochemical processes have also yielded greenockite. C. Geitner[a] heated metallic cadmium with sulphurous acid to 200° in a sealed tube. A mixture of amorphous and crystalline sulphide was deposited. A. Ditte[b] found that amorphous cadmium sulphide could be dissolved in ammonium sulphydrate, especially at a temperature of 60°. On cooling, crystals of greenockite and free sulphur were formed.

For geological purposes, these syntheses of blende and wurtzite are very suggestive . Blende is formed at relatively low temperatures. and at higher temperatures it is transformed into the hexagonal modification. An ore body containing wurtzite is therefore, probably, a product of relatively high temperatures. What these temperatures are and at what temperatures the transformation takes place remain to be determined. The hydrochemical syntheses of blende, furthermore, are paralleled by certain natural occurrences of the mineral. G. Bischof,[c] for example, mentions a sinter, formed within historical times in an old lead mine, which contained 37.57 per cent of ZnS. It was probably produced by the action of decaying wood upon the zinc-bearing mine waters. In North St. Louis, Missouri, H. A. Wheeler[d] found massive blende embedded in lignite, where it had evidently been formed by the reducing action of organic matter upon other zinc compounds. C. R. Keyes[e] speaks of blende crystals, one-fourth inch across, which had grown on iron nails immersed in a mine water during fifteen years. W. P. Jenney[f] also refers to the deposition of crystallized blende on the walls of a tunnel which had been closed and flooded for ten or twelve years. Some crystals were deposited on the pick marks left by the miners.

Zinc sulphide is also known in nature as a chemical precipitate. In workings at Galena, Kansas, large cavities have been found, filled with a white mud which consisted of nearly pure zinc sulphide mingled with acid water.[g] Evidently the zinc had been dissolved, probably by the oxidation of blende, and then thrown down again, either by sulphureted waters or by organic matter. Natural solutions of zinc sulphate exist in the region around Joplin, and have already been described in previous portions of this volume.[h]

---

[a] Liebig's Annalen, vol. 129, p. 350, 1864.

[b] Compt. Rend., vol. 85, p. 402, 1877.

[c] Lehrb. chem. phys. Geol., 2d ed., vol. 1, p. 559.

[d] Trans. Acad. Sci. St. Louis, vol. 7, p. 123, 1895. Other associations of sphalerite with coal, also in Missouri, are mentioned by W. P. Jenney, in Trans. Am. Inst. Min. Eng., vol. 33, p. 460, 1903.

[e] Trans. Am. Inst. Min. Eng., vol. 31, p. 611, 1901.

[f] Idem, vol. 33, p. 470, 1903.

[g] Described by J. D. Robertson, Am. Jour. Sci., 3d ser., vol. 40, p. 160, 1890; and by M. W. Iles and J. D. Hawkins, Eng. and Min. Jour., vol. 49, p. 499, 1890.

[h] See *ante*, p. 147.

The oxidized compounds of zinc, as natural minerals, are fairly numerous. The following species are especially noteworthy:

Zincite	ZnO.
Gahnite [a]	$ZnAl_2O_4$.
Franklinite [a]	$ZnFe_2O_4$.
Chalcophanite [a]	$ZnO.2MnO_2.2H_2O$.
Smithsonite	$ZnCO_3$.
Hydrozincite	$ZnCO_3.2ZnO_2H_2$.
Willemite [b]	Zn_2SiO_4.
Calamine	$Zn_2H_2SiO_5$.
Clinohedrite	$ZnCaH_2SiO_5$.
Hardystonite	$ZnCa_2Si_2O_7$.

To this list may be added the phosphates, hopeite [c] and kehoeite; the arsenates, adamite, köttigite, and veszelyite; descloizite, a vanadate of lead and zinc; and the sulphates, goslarite and zincaluminite. Jeffersonite is a zinc-bearing pyroxene, and danalite is a silicate plus sulphide, of zinc, manganese, iron, and glucinum. None of these species need further mention except goslarite, $ZnSO_4.7H_2O$, which is the compound of zinc existing in mine waters and in zinciferous springs. When zinc is removed from an ore body by solution, it is carried in this form.

Zincite, the natural oxide of zinc, is well known as a furnace product, and it has also been repeatedly synthetized.[d] According to A. Daubrée,[e] when zinc chloride and water vapor act upon lime at a red heat, zincite is formed. Ferrières and Dupont [f] obtained it, at a similar temperature, by the action of steam upon zinc chloride alone. By heating the amorphous oxide in an atmosphere of oxygen, T. Sidot [g] was able to effect its crystallization. A. Gorgeu [h] prepared the mineral by several processes, one of which consisted in the gradual calcination of zinc sulphate or nitrate. In this case better results were obtained when an alkaline sulphate was mingled with the zinc salt. Zincite was also formed when a mixture of zinc fluoride and potassium fluoride was strongly heated in a current of steam.

The zinc spinels, gahnite and franklinite, have also been artificially prepared. J. J. Ebelmen [i] obtained gahnite by fusing a mix-

[a] The formulæ here given are ideal. Part of the zinc is commonly replaced by manganese or iron.

[b] Troostite is a manganiferous willemite.

[c] For a synthesis of hopeite, see C. Friedel and E. Sarasin, Bull. Soc. min., vol. 2, p. 153, 1879.

[d] See H. Traube, Neues Jahrb., Beil. Bd. 9, p. 151, 1894; and H. Ries, Am. Jour. Sci., 3d ser., vol. 48, p. 256, 1894, on zincite as a furnace product. See also J. T. Cundell and A. Hutchinson, Min. Mag., vol. 9, p. 5, 1892. L. Bourgeois (Reproduction artificielle des minéraux) cites other examples, and so, too, does Ries. Bourgeois also mentions syntheses by Becquerel and Regnault, but his references are erroneous, and I can not verify them.

[e] Compt. Rend., vol. 39, p. 135, 1854.

[f] See Bourgeois, op. cit., p. 56.

[g] Compt. Rend., vol. 69, p. 201, 1869.

[h] Idem, vol. 104, p. 120, 1887.

[i] Ann. chim. phys., 3d ser., vol. 33, p. 34, 1851.

ture of alumina, zinc oxide, and boron trioxide. When ferric oxide was used in place of alumina, franklinite was formed. By vaporizing aluminum chloride and zinc chloride over lime at a red heat, A. Daubrée [a] prepared gahnite; and franklinite was similarly produced by using the chlorides of iron and zinc. H. Sainte-Claire Deville and H. Caron [b] obtained gahnite by vaporizing a mixture of zinc and aluminum fluorides in presence of boric oxide. A. Stelzner [c] found gahnite, with fayalite, in the walls of a muffle of a zinc furnace at Freiberg, where it had been formed by the action of zinc vapors upon the clay silicates. In another similar case, H. Schulze and Stelzner [d] report the formation of willemite and tridymite. The occurrence of crystallized willemite in a furnace slag has also been recorded by W. M. Hutchings.[e]

According to A. Daubrée,[f] willemite can be prepared by the action of silicon tetrachloride upon zinc oxide at a red heat. This, however, was denied by H. Sainte-Claire Deville,[g] who found that willemite was decomposed by silicon chloride. It is formed when silicon fluoride acts upon zinc oxide, and also by the action of zinc fluoride upon heated silica. A. Gorgeu [h] produced willemite by two processes. First, zinc sulphate, calcined with an alkaline sulphate and silica, yields willemite and tridymite. Secondly, the mineral is formed when zinc chloride is fused with silica in presence of steam.

By heating metallic zinc with seltzer water in a sealed tube at 100°, L. Bourgeois [i] obtained crystals of smithsonite. G. Bischof [j] cites a number of instances in which zinc carbonate has formed as a deposit from natural waters.

In nature, zinc ores occur under a variety of conditions—in true metalliferous veins, in metamorphic rocks, and under circumstances which indicate a sedimentary origin. In some cases they form metasomatic replacements of limestone. Percolating solutions of zinc, permeating limestones, would necessarily react upon the latter, the zinc being deposited as carbonate in place of the removed lime compounds. Pseudomorphs of smithsonite after calcite are well known.

In the introduction to this chapter evidence was adduced showing that zinc was present, albeit in small amounts, in Archean rocks, from which it may be concentrated. It is also found in diffused

[a] Compt. Rend., vol. 39, p. 135, 1854.
[b] Idem, vol. 46, p. 766, 1858.
[c] Neues Jahrb., 1882, pt. 1, p. 170.
[d] Idem, 1881, pt. 1, p. 120.
[e] Geol. Mag., 3d ser., vol. 7, p. 31, 1890.
[f] Compt. Rend., vol. 39, p. 135, 1854.
[g] Idem, vol. 52, p. 1304, 1861.
[h] Idem, vol. 104, p. 120, 1887.
[i] Reproduction artificielle des minéraux, p. 144.
[j] Lehrb. chem. phys. Geol., 2d ed., vol. 1, p. 561.

traces in many sedimentary rocks. L. Dieulafait[a] detected zinc in hundreds of samples of Jurassic limestone from central France. J. D. Robertson[b] found it, with lead and copper, in the limestones of Missouri, and J. B. Weems[c] determined lead and zinc in the limestones and dolomites of the Dubuque region, Iowa. The average of nine samples analyzed by Weems gave 0.00326 per cent Pb and 0.00029 per cent Zn. Robertson's figures are as follows for six Silurian magnesian limestones and seven limestones from the "Lower" Carboniferous; they are stated in percentages.

Lead, zinc, and copper in limestones.

	Silurian.	Lower Carboniferous.
Lead	Trace to 0.00156	Trace to 0.00346
Zinc	0.00016 to 0.01536	Trace to 0.00255
Copper	0.00040 to 0.00256	Trace to 0.00880

Small as these proportions are, they are sufficient to account for the formation of the ore bodies in the regions studied. In each region a comparatively moderate amount of decomposition of the country rocks would supply the ores contained in the known deposits.[d]

Sphalerite is commonly associated with other sulphides, and especially with galena, pyrite, marcasite, and more rarely chalcopyrite. The association with galena is so common that economic geologists usually consider lead and zinc together. In the famous ore bodies of the Mississippi Valley the two ores are rarely found quite apart, although in one locality zinc may predominate, while lead is the chief thing of value in another. Calcite, dolomite, and sometimes fluorite or barite are frequent companions of the ores, and bituminous matter is often present also. By alteration of sphalerite, surface deposits of calamine and smithsonite are formed, just as oxidized ores are developed above bodies of copper sulphide. Secondary crystallizations of sphalerite are also common where solutions of zinc sulphate, formed near the top of an ore body, have percolated downward and been reduced to sulphide again. It is possible that pyrite or marcasite may react upon the zinc-bearing solutions and aid in the regeneration of the sphalerite. Some experiments by H. N. Stokes,[e] carried out in the laboratory of the United States Geological Survey, have shown the possibility of such reactions. Pyrite and marcasite heated to 180° with solutions of zinc salts and alkaline carbonates actually yield zinc sulphide. Sphalerite sometimes occurs in stalactitic forms,

[a] Compt. Rend., vol. 90, p. 1573, 1880, and vol. 96, p. 70, 1883.

[b] Missouri Geol. Survey, vol. 7, pp. 479–481, 1894.

[c] Cited by S. Calvin and H. F. Bain, Iowa Geol. Survey, vol. 10, p. 566, 1900.

[d] See T. C. Chamberlin, Geology of Wisconsin, vol. 4, pp. 367–553, 1882, and A. Winslow, Missouri Geol. Survey, vols. 6 and 7, especially vol. 7, p. 467, etc., 1894.

[e] Econ. Geol., vol. 2, p. 17, 1907.

which could be deposited only from solutions. The calamine and smithsonite are sometimes pure and crystalline, sometimes quite impure and earthy. The so-called "tallow clays" of Missouri and Arkansas are zinc-bearing clays, probably mixtures of aluminous silicates with calamine, and they contain from 4 or 5 per cent up to 56 per cent of zinc oxide.[a] Similar clays, from an ore body at Leadville, Colorado, were analyzed by W. F. Hillebrand.[b]

On the sedimentary lead and zinc ores of the Mississippi Valley there is a copious literature, with much discussion about genetic problems. Some authorities derive the ores from ascending, heated waters; some find their proximate sources in the adjacent limestones, and others trace them still further back to Archean rocks, or argue that the zinc and lead were deposited with the sediments from solution in the Silurian ocean. All agree, however, that the ores were deposited from solution, which is the essential fact for the geochemist to consider.[c]

The zinc mines at Franklin and Sterling Hill, New Jersey, are of a different type from those of the Mississippi Valley, being indeed unique. Here zincite, franklinite, and willemite, ores which are rare minerals elsewhere, are most abundant, while blende is present only in insignificant quantities. The ore bodies occur in crystalline limestone, in contact with gneiss, and the limestone is pierced by numerous granitic dikes. It seems probable, from the character of the ores and their mineralogical associations, that they were formed by contact metamorphism. A bed of limestone containing calamine and

---

[a] See W. H. Seamon, Am. Jour. Sci., 3d ser., vol. 39, p. 38, 1890; and J. C. Branner, Ann. Rept. Geol. Survey, Arkansas, vol. 5, pp. 9–34, 1892. Both authors give analyses, and other analyses by T. M. Chatard and H. N. Stokes can be found in Bull. U. S. Geol. Survey No. 228, pp. 361, 362, 1904. A similar clay from Bertha, Virginia, with 12.1 per cent ZnO, was described by B. H. Heyward, Chem. News, vol. 44, p. 207, 1881.

[b] Mon. U. S. Geol. Survey, vol. 12, p. 603, 1886.

[c] For data concerning these deposits, see J. D. Whitney, Rept. Geol. Survey, Wisconsin, vol. 1, chapter 6, 1862; T. C. Chamberlin, Geology of Wisconsin, vol. 4, pp. 367–553, 1882; W. P. Blake, Bull. Geol. Soc. America, vol. 5, p. 25, 1893; U. S. Grant, Bull. No. 9, Wisconsin Geol. Nat. Hist. Survey, 1903, and Bull. U. S. Geol. Survey No. 260, p. 305, 1905; E. E. Ellis, idem, p. 310; A. G. Leonard, Iowa Geol. Survey, vol. 6, pp. 13–65, 1897; and Am. Geologist, vol. 16, p. 288, 1905; H. F. Bain, Bull. U. S. Geol. Survey No. 225, p. 202, 1904; A. Winslow, Missouri Geol. Survey, vols. 6 and 7, 1894, and Jour. Geol., vol. 1, p. 612, 1893; J. D. Robertson, Am. Geologist, vol. 15, p. 235, 1895; Bain, Van Hise, and Adams, Twenty-second Ann. Rept. U. S. Geol. Survey, pt. 2, p. 23, 1902; W. P. Jenney, Trans. Am. Inst. Min. Eng., vol. 22, pp. 171, 642, 1894; E. Hedburg, idem, vol. 31, p. 379, 1901; J. C. Branner, Ann. Rept. Geol. Survey Arkansas, vol. 5, 1892, and Trans. Am. Inst. Min. Eng., vol. 31, p. 572, 1901; G. I. Adams, idem, vol. 34, p. 163, 1904; Bull. U. S. Geol. Survey No. 213, p. 187, 1903, and Prof. Paper U. S. Geol. Survey No. 24, 1904; W. S. T. Smith, Bull. U. S. Geol. Survey No. 213, p. 196, 1903, and A. Keith, Bull. U. S. Geol. Survey No. 225, p. 208, 1904. See also W. H. Case, Trans. Am. Inst. Min. Eng., vol. 22, p. 511, 1894, on the zinc ores, of Bertha, Virginia. S. F. Emmons (Trans. Am. Inst. Min. Eng., vol. 22, p. 83, 1894) briefly discusses the origin of zinc ores, and so too does C. R. Van Hise in his Treatise on metamorphism, Mon. U. S. Geol. Survey, vol. 47, pp. 1125–1158, 1904. A zinc deposit in Nevada is described by Bain, Bull. U. S. Geol. Survey No. 285, p. 166, 1906. Other recent publications are by E. Haworth and others, Univ. Geol. Survey Kansas, vol. 8, 1904; E. R. Buckley and H. A. Buehler, Missouri Bur. Geol. and Mines, 2d ser., vol. 4, 1906; H. F. Bain, Bull. U. S. Geol. Survey No. 294, 1907; T. L. Watson, Bull. Am. Inst. Min. Eng., March, 1906. See also Bain, Bull. No. 19, Wisconsin Geol. Nat. Hist. Survey, 1907.

smithsonite, together with other impurities, might be expected to change, by thermal metamorphosis, into just such a formation as that at Franklin. The smithsonite would yield zincite, the willemite might be formed from calamine, and the franklinite and gahnite, with other spinels, could develop exactly as members of the spinel group develop in ordinary limestones. This hypothesis needs verification, but it is plausible and simple. In southwestern New Mexico, according to W. P. Blake,[a] zinc ores occur in a contact-metamorphosed limestone; but blende is the principal mineral. Blake, however, is inclined to correlate this deposit with that at Franklin, notwithstanding their differences.[b]

LEAD.

Although lead is one of the commoner heavy metals, native lead is exceedingly rare. It is known, however, from several localities, but it is always of secondary origin, a product of reduction.[c]

The principal ore of lead is the normal sulphide, galena, PbS. Allied to this are the rare selenide, clausthalite, and altaite, the corresponding telluride.[d] The synthetic preparation of galena has been effected by various methods, both wet and dry. J. Durocher[e] obtained it by the action of hydrogen sulphide upon lead chloride at a red heat. Any other salt of lead would probably serve the same purpose. Even the silicate of lead contained in glass, according to T. Sidot,[f] when heated in the vapor of sulphur, yields galena. F. Stolba[g] produced crystals of the sulphide by heating the amorphous compound to dull redness with chalk. F. de Marigny[h] produced galena by fusing litharge with iron pyrites and starch. F. Roessler[i] crystallized both galena and clausthalite from solution in molten lead. By distillation of a mixture containing lead oxide, sulphur, and ammonium chloride, E. Weinschenk[j] also prepared crystals of galena. It is furthermore to be noted that galena is not uncommon in furnace slags, and that Mayençon[k] has reported its formation as a product of sublimation in a burning coal mine.

---

[a] Trans. Am. Inst. Min. Eng., vol. 24, p. 187, 1895.

[b] For data regarding the Franklin region, see F. L. Nason, Ann. Rept. State Geologist, New Jersey, 1890, p. 25; and J. F. Kemp, Trans. New York Acad. Sci., vol. 13, p. 76, 1893. Kemp gives references to earlier literature. See also J. E. Wolff, Bull. U. S. Geol. Survey No. 213, p. 214, 1903.

[c] A. Hamberg (Zeitschr. Kryst. Min., vol. 17, p. 253, 1890) has suggested that at Harstig, Sweden, the lead was reduced by arsenious oxide.

[d] Nagyagite is a sulphotelluride of lead, gold, and antimony. Naumannite, lehrbachite, and zorgite are selenides of lead with silver, mercury, or copper.

[e] Compt. Rend., vol. 32, p. 825, 1851. See also A. Carnot, cited by L. Bourgeois, Reproduction artificielle des minéraux, p. 30.

[f] Compt. Rend., vol. 62, p. 999, 1866.

[g] Jahresb. Chemie, 1863, p. 242.

[h] Compt. Rend., vol. 58, p. 967, 1864.

[i] Zeitschr. anorg. Chemie, vol. 9, p. 41, 1895. By passing selenium vapor over melted lead G. Little (Liebig's Annalen, vol. 112, p. 211, 1859) also produced the selenide.

[j] Zeitschr. Kryst. Min., vol. 17, p. 489, 1890.

[k] *Compt. Rend.*, vol. 86, p. 491, 1878.

The foregoing syntheses of galena have small geological significance. In nature, the mineral appears to be commonly formed by hydrochemical reactions, and these can be imitated in the laboratory. C. Doelter [a] allowed lead chloride, sodium bicarbonate, and a solution of hydrogen sulphide in water to remain in a sealed tube at ordinary room temperature during five months. Crystals of galena were thus formed. E. Weinschenk [b] heated a solution of lead nitrate with ammonium sulphydrate to 180° in a sealed tube and also obtained galena. H. N. Stokes [c] has found that pyrite or marcasite, heated with a solution of lead chloride to 180°, will precipitate lead sulphide. A. Daubrée [d] observed the formation of galena, together with anglesite and phosgenite, by the action of the thermal waters of Bourbonne-les-Bains on metallic lead. Lead sulphide is also known in spring deposits,[e] and as a pseudomorphous replacement of other minerals. W. Lindgren [f] mentions replacements of calcite, dolomite, and quartz, and also of orthoclase and rhodonite. W. H. Hobbs [g] has described secondary galena as a surface film on cerussite, formed probably by the action of hydrogen sulphide on the latter mineral. That galena itself is slightly soluble in water and also in solutions of sodium sulphide has been shown by C. Doelter.[h] A. Gautier [i] has shown that galena is dissociated into its elements by the action of steam at a red heat. A little galena volatilizes and is redeposited in crystalline form, and some also is converted into sulphate. The presence of galena among the Vesuvian sublimates, mentioned in an earlier chapter of this volume, may be correlated with Gautier's observations.

The sulphosalts of lead are numerous, although, on account of their individual rarity, they have little significance as ores.[j] Sartorite, dufrenoysite, guitermanite, jordanite, rathite, and lengenbachite are sulpharsenides. Zinkenite, plagionite, warrenite, jamesonite, semseyite, boulangerite, meneghinite, geocronite, kilbrickenite, and epiboulangerite are sulphantimonides. Other sulphantimonides of lead and silver are brongniardite, diaphorite, freieslebenite, and andorite. The sulphobismuthides are chiviatite, rezbanyite, galenobismutite, schirmerite, cosalite, schapbachite (with lead and silver), kobellite,

[a] Zeitschr. Kryst. Min., vol. 11, p. 41, 1886. A. C. Becquerel (Compt. Rend., vol. 44, p. 938, 1857) mentions a hydrochemical synthesis of galena, but too vaguely to warrant citation above.

[b] Idem, vol. 17, p. 497, 1890.

[c] Econ. Geol., vol. 2, p. 22, 1907.

[d] Études synthétiques de géologie expérimentale, pp. 84, 85.

[e] See, for example, the sinter described by G. F. Becker and W. H. Melville, Mon. U. S. Geol. Survey, vol. 13, p. 344, 1888.

[f] Trans. Am. Inst. Min. Eng., vol. 30, p. 578, 1900.

[g] Am. Jour. Sci., 3d ser., vol. 50, p. 121, 1895.

[h] Min. pet. Mitth., vol. 11, p. 319, 1890.

[i] Compt. Rend., vol. 142, p. 1465, 1906.

[j] Bournonite and alkinite, which contain both lead and copper, have already been mentioned under the latter metal.

lillianite, and beegerite. Teallite, cylindrite, and franckeite are sulphostannides, which, for present purposes, must be classified under tin.

According to J. Fournet,[a] zinkenite, $PbSb_2S_4$, can be prepared by fusing galena and stibnite together in proper proportions. C. Doelter,[b] by heating antimony, antimony trioxide, and lead chloride together in gaseous hydrogen sulphide, obtained jamesonite, $PbSb_2S_5$, mixed with stibnite and galena. By the action of molten lead chloride upon antimony trisulphide, H. Sommerlad[c] reproduced boulangerite, $Pb_3Sb_2S_6$; zinkenite; jamesonite; warrenite[d] (domingite), $Pb_3Sb_4S_9$; and plagionite, $Pb_5Sb_8S_{17}$. By fusing lead sulphide and arsenic trisulphide together, he obtained sartorite (scleroclase), $PbAs_2S_4$, and dufrenoysite, $Pb_2As_2S_5$. Whether any of these syntheses correspond to natural processes is questionable. The ore bodies in which the minerals occur appear to have been formed in most cases from mineralized solutions, or else by pneumatolytic reactions at temperatures which were not excessively high. Syntheses, to be geologically significant, should be conducted on the lines which nature seems to have followed.

By oxidation, carbonation, etc., the sulphur compounds of lead are transformed into other minerals. Among them are the three oxides, massicot, PbO, minium, Pb_3O_4, and plattnerite, PbO_2. All these have been prepared synthetically in crystalline form, but in most cases by methods which scarcely resemble natural processes. A. C. Becquerel,[e] by allowing an alkaline solution of alumina or silica to act slowly upon a plate of lead, obtained crystals of massicot. The lead was surrounded by a coil of copper wire, and Becquerel attributed the synthesis to electrical action. It was more probably a simple hydrochemical process.

Lead carbonate, cerussite, $PbCO_3$, is a common mineral, produced by the action of carbonated waters in the upper levels of ore bodies.[f] There are also the basic hydrocerussite, $Pb_3(OH)_2(CO_3)_2$, and the rare dundasite, a carbonate of aluminum and lead.[g] Becquerel[h]

[a] Cited by L. Bourgeois, Reproduction artificielle des minéraux, p. 46, from Jour. prakt. Chemie, vol. 2, p. 490.

[b] Zeitschr. Kryst. Min., vol. 11, p. 40, 1886.

[c] Zeitschr. anorg. Chemie, vol. 18, p. 420, 1898. Sommerlad's results have been called in question by F. Ducatte (Thesis, Univ. Paris, 1902) and J. Rondet (Thesis, Univ. Paris, 1904), who claim that the reactions employed really produce complex chlorinated sulphides, and not true sulphosalts.

[d] According to L. J. Spencer (Min. Mag., vol. 14, p. 207, 1907), warrenite is identical with jamesonite.

[e] Compt. Rend., vol. 34, p. 29, 1852. See also, for other researches, L. Bourgeois, Reproduction artificielle des minéraux, p. 56. L. Michel (Bull. Soc. min., vol. 13, p. 56, 1890) reports syntheses of minium and plattnerite.

[f] A large deposit of cerussite in the Terrible mine, at Ilse, Colorado, has recently been described by R. B. Brinsmade, Eng. and Min. Jour., vol. 83, p. 844, 1907. Its formation is ascribed to the action of descending waters.

[g] See G. T. Prior, Mineralog. Mag., vol. 14, p. 167, 1906.

[h] *Loc. cit.*

obtained crystals of cerussite when a solution of sodium and calcium carbonate acted gradually upon a plate of lead. E. Frémy[a] produced the mineral by the slow diffusion of a carbonate solution into a lead solution through a porous membrane. By some such gradual mingling of dilute solutions the natural cerussite is probably often formed.[b] H. von Dechen[c] has reported the case of an old mine whose walls were covered with a thick coating of cerussite, which had been deposited from solution like sinter. A. Lacroix[d] has observed the mineral as a coating on old Roman coins. It is also produced by metasomatic replacement in limestones, and fossils, such as encrinites, have been found completely transformed into cerussite.[e] The rare chloro-carbonate of lead, phosgenite, $Pb_2Cl_2CO_3$, was reproduced by C. Friedel and E. Sarasin[f] when lead chloride, lead carbonate, and water were heated together in a sealed tube to 180°. It was also prepared by A. de Schulten,[g] who allowed a filtered solution of lead chloride to stand in a large flask while a current of carbon dioxide passed slowly through the vacant space above.

Cotunnite, lead chloride, $PbCl_2$, is found in nature as a volcanic mineral, produced by sublimation. F. Stöber[h] reproduced the mineral by this process, and also obtained it in minute crystals from simple solution in water or in aqueous hydrochloric acid. It was also formed by A. C. Becquerel,[i] much earlier, by allowing a solution of copper sulphate and sodium chloride to act upon galena during a period of seven years. The sulphate, anglesite, was obtained at the same time. The great rarity of cotunnite as a natural mineral is due to the strong tendency on the part of lead to form basic salts, and the basic chlorides are much more frequently found. Matlockite, Pb_2OCl_2 and mendipite, $Pb_3O_2Cl_2$, have long been known. Schwartzembergite is like mendipite in composition, but with iodine largely replacing chlorine. Laurionite,[j] paralaurionite, penfieldite, daviesite, and fiedlerite are oxychlorides of lead which have formed on ancient slags at Laurium, in Greece. Caracolite is a double salt of the composition $PbOHCl+Na_2SO_4$. Percylite, cumengeite, and pseudoboleite are

---

[a] Compt. Rend., vol. 63, p. 714, 1866.

[b] The syntheses of cerussite by J. Riban (Compt. Rend., vol. 93, p. 1026, 1881) and of hydrocerussite by L. Bourgeois (Bull. Soc. min., vol. 11, p. 221, 1888) have no relation to natural processes.

[c] Neues Jahrb., 1858, p. 216.

[d] Bull. Soc. min., vol. 6, p. 175, 1883.

[e] See Blöde, Neues Jahrb., 1834, p. 638.

[f] Bull. Soc. min., vol. 4 p. 175, 1881.

[g] Idem, vol. 20, p. 194, 1897.

[h] Bull. Acad. Belg., 3d ser., vol. 30, p. 345, 1895.

[i] Compt. Rend., vol. 34, p. 29, 1852.

[j] For a synthesis of laurionite, PbOHCl, see A. de Schulten, Bull. Soc. min., vol. 20, p. 186, 1897.

oxychlorides of lead and copper, and boleite is similar in composition, but with silver chloride as an additional component.[a]

Lead sulphate, $PbSO_4$, as the crystallized mineral anglesite, is a common oxidation derivative of galena. According to E. Jannetaz[b] galena is easily attacked by acid solutions of ferrous sulphate such as are generated by the oxidation of pyrite or marcasite. The association of galena with pyrite, therefore, is favorable to the formation of anglesite. Its synthesis by Becquerel has already been mentioned, and it has also been prepared by Macé,[c] who added a solution of ferrous sulphate very slowly to one of lead nitrate. Essentially the same process was successfully followed by E. Frémy[d] and by E. Masing,[e] a soluble sulphate being allowed to diffuse very slowly into one of a lead salt—in Masing's case lead nitrate. Lead sulphate, although relatively insoluble, is not absolutely so; it therefore can be crystallized, as the syntheses show, when it is formed with extreme slowness in very dilute solutions. Conditions of the sort probably attend the formation of anglesite in bodies of lead ore; but when carbonates are present in the percolating waters, cerussite is produced instead. The synthesis of anglesite by N. S. Manross,[f] who obtained it by fusing lead chloride with potassium sulphate, does not seem to correspond with any natural mode of formation.

Lanarkite is a rare, basic sulphate of lead, Pb_2SO_5.[g] Caledonite and linarite are basic sulphates of lead and copper, and plumbojarosite is another basic sulphate of lead and ferric iron. Leadhillite is a complex salt of the formula $PbSO_4.2PbCO_3.Pb(OH)_2$. At Granby, Missouri, according to W. M. Foote,[h] it occurs as a pseudomorph after calcite and galena. In composition it suggests a double salt formed by the union of hydrocerussite and anglesite, in equimolecular proportions.[i]

Lead salts analogous to anglesite are the chromate, crocoite, $PbCrO_4$; the molybdate, wulfenite, $PbMoO_4$; and the tungstate, stolzite, $PbWO_4$. The rare phœnicochroite[j] is a basic chromate, $Pb_3Cr_2O_9$; vauquelinite is a chromate and phosphate, and beresovite is described as a chromate and carbonate of lead, which is not, however, the equivalent of leadhillite, for it contains no water.

---

[a] Percylite, cumengeite, and boleite have been made artificially by C. Friedel, Bull. Soc. min., vol. 15, p. 96, 1892; vol. 16, p. 187, 1893, and vol. 17, p. 6, 1894. See also, in reference to these minerals, E. Mallard, Bull. Soc. min., vol. 16, p. 184, 1893, and G. Friedel, idem, vol. 29, p. 14, 1906.

[b] Bull. Soc. géol., 3d ser., vol. 3, p. 310, 1875.

[c] Compt. Rend., vol. 36, p. 825, 1853.

[d] Idem, vol. 63, p. 714, 1866.

[e] Jahresb. Chemie, 1889, p. 4.

[f] Liebig's Annalen, vol. 82, p. 348, 1852.

[g] For a synthesis of lanarkite, see A. de Schulten, Bull. Soc. min., vol. 21, p. 142, 1898.

[h] Am. Jour. Sci., 3d ser., vol. 50, p. 99, 1895.

[i] Palmierite, a double sulphate of lead and potassium, is found among the recent products of fumarole action at Vesuvius.

[j] Also called melanochroite.

When sodium tungstate is fused with lead chloride, according to N. S. Manross,[a] stolzite is formed. With sodium molybdate, wulfenite is produced; and by fusing together potassium chromate and lead chloride he obtained crocoite. The formation of wulfenite as a furnace product [b] is probably due to some reaction of this kind. By slow diffusion of solutions of potassium chromate and lead nitrate into one another A. Drevermann [c] obtained both crocoite and phœnicochroite. Cerussite and anglesite were formed at the same time from impurities in the reagents. A. C. Becquerel [d] allowed a galvanic couple of lead and platinum to act for several years upon a solution of chromic chloride and secured crystals which appeared to be crocoite. S. Meunier [e] found that phœnicochroite was formed when fragments of galena were immersed during six months in a solution of potassium dichromate. L. Bourgeois [f] boiled precipitated lead chromate with dilute nitric acid. From the hot, filtered solution crystals of crocoite were deposited. Better results were obtained when the operation was conducted in a sealed tube at 130°. Lachaud and Lepierre [g] state that when amorphous lead chromate is boiled with a solution of chromic acid it crystallizes into crocoite. Phœnicochroite was formed when lead chromate and sodium chloride were fused together. Both chromates were obtained by Lüdeking [h] upon exposing to the air during several months a solution of lead chromate in caustic potash. Of all these syntheses, that by Meunier seems best to represent the probable natural processes.

Three lead minerals, the chloro-phosphate, pyromorphite, $Pb_5P_3O_{12}Cl$; the corresponding arsenate, mimetite, $Pb_5As_3O_{12}Cl$; and the vanadium salt, vanadinite, $Pb_5V_3O_{12}Cl$, occur both independently and in a great variety of isomorphous mixtures. Endlichite, for example, is a mixture of the arsenic and vanadium compounds, and minerals intermediate between mimetite and pyromorphite are common.

All these species have been prepared synthetically, and pyromorphite is also known as a furnace product in slag.[i] N. S. Manross [j] obtained pyromorphite by fusing lead chloride with tribasic sodium phosphate. H. Sainte-Claire Deville and H. Caron [k] fused lead phosphate, lead chloride, and sodium chloride together to produce pyro-

[a] Liebig's Annalen, vol. 82, p. 348, 1852. H. Schultze (idem, vol. 126, p. 51, 1863) prepared wulfenite in the same way.
[b] See J. F. L. Hausmann, idem, vol. 81, p. 224, 1852.
[c] Idem, vol. 87, p. 120, 1853; vol. 89, p. 11, 1854.
[d] Compt. Rend., vol. 63, p. 1, 1866.
[e] Idem, vol. 87, p. 656, 1878.
[f] Bull. Soc. min., vol. 10, p. 187, 1887.
[g] Bull. Soc. chim., 3d ser., vol. 6, p. 230, 1891.
[h] Am. Jour. Sci., 3d ser., vol. 44, p. 57.
[i] J. J. Nöggerath, Neues Jahrb., 1847, p. 37.
[j] Liebig's Annalen, vol. 82, p. 348, 1852.
[k] Ann. chim. phys., 3d ser., vol. 67, p. 451, 1863.

morphite, and L. Michel[a] accomplished the same purpose by the same process, only omitting the common salt. From fusions of lead arsenate with lead chloride G. Lechartier[b] and also Michel succeeded in reproducing mimetite. Vanadinite was obtained by P. Hautefeuille[c] when vanadic oxide was fused with lead oxide and lead chloride. All of these syntheses, it will be seen, are similar and were effected by fusion, while the natural occurrences of the minerals indicate hydrochemical reactions. In the case of pyromorphite this natural process was simulated by H. Debray,[d] who prepared pyromorphite by digesting lead pyrophosphate with a solution of lead chloride at 250°.

Other phosphates, arsenates, and vanadates containing lead and sometimes zinc, iron, or copper also, are plumbogummite, caryinite, carminite, lossenite, bayldonite, ecdemite, beudantite,[e] descloizite, cuprodescloizite, brackebuschite, and psittacinite. Bindheimite is a lead antimonate, formed by oxidation from sulphosalts of lead. Nadorite, $PbClSbO_2$, and ochrolite, $Pb_6Cl_2Sb_2O_7$, are perhaps of similar origin. All of these species are rare minerals and need not be considered further. The same may be said of the lead-bearing silicates, barysilite, ganomalite, hyalotekite, kentrolite, melanotekite, nasonite, roeblingite, and molybdophyllite. The roeblingite, however, from the zinc mines at Franklin, New Jersey, is unique in containing a sulphite molecule combined with the silicate. An artificial lead silicate from furnace slag has been described by E. S. Dana and S. L. Penfield[f] and also by H. A. Wheeler.[g]

The common association of lead ores with those of zinc was pointed out in the preceding section of this chapter. Blende and galena are both formed from solutions, but not always in the same manner. By differences in the solubility of their oxidation products the two metals are often separated from each other, for lead sulphate is slightly soluble, while zinc sulphate is easily so. Zinc, therefore, disappears from the upper portions of ore bodies much more rapidly than lead, and, for the same reason, so does copper. The lead ores of Eureka, Nevada, are regarded by J. S. Curtis[h] as the product of solfataric action; those of Leadville, Colorado, according to S. F. Emmons,[i] were deposited from descending solutions, which had gathered their metallic burden from neighboring eruptive rocks. In both cases the ore bodies are interpreted as replacements in country rock.

---

[a] Bull. Soc. min., vol. 10, p. 133, 1887.
[b] Compt. Rend., vol. 65, p. 172, 1867.
[c] Idem, vol. 77, p. 896, 1873.
[d] Ann. chim. phys., 3d ser., vol. 61, p. 443, 1861.
[e] Phosphate, arsenate, and sulphate of lead.
[f] Am. Jour. Sci., 3d ser., vol. 30, p. 138, 1885.
[g] Idem, vol. 32, p. 272, 1886.
[h] Mon. U. S. Geol. Survey, vol. 7, chapters 7, 8, 1884.
[i] Idem, vol. 12, p. 378, 1886.

TIN.[a]

Tin is one of the rarer metals, and its ores are not numerous. Native tin is occasionally found, but never in more than trifling quantities and in small grains.[b] The ore of chief importance is the dioxide, cassiterite, SnO_2, but several sulphosalts are also known. They are—

Stannite	Cu_2FeSnS_4.
Teallite[c]	$PbSnS_2$.
Cylindrite	$Pb_3FeSn_4Sb_2S_{14}$.
Franckeite	$Pb_6FeSn_3Sb_2S_{14}$.

There is also a very rare borate of calcium and tin, nordenskiöldine,[d] $CaSnB_2O_6$, which is interesting because it directly connects tin with boron. Other minerals, especially those of the rare earths, sometimes contain small amounts of tin as an impurity, and the metal has also been found in zinc blende.[e]

Cassiterite has been repeatedly observed as a furnace product, formed by the direct oxidation of tin. Recent occurrences of this kind are recorded by A. Arzruni[f] and J. H. L. Vogt,[g] and L. Bourgeois[h] has identified the mineral in scoria from a bronze foundry. The first synthesis of cassiterite was performed by A. Daubrée[i] when the vapor of stannic chloride was mixed with steam in a red-hot porcelain tube. Later the same chemist[j] prepared the mineral by passing the vapor of stannic chloride over heated lime. The crystallized oxide was obtained by H. Sainte-Claire Deville and H. Caron[k] when stannic fluoride and boric oxide were heated together to whiteness. H. Sainte-Claire Deville[l] also obtained it by heating the amorphous oxide in a slow current of hydrochloric acid gas and again by a repetition of Daubrée's first process. A. Ditte[m] noticed

[a] For a paper on the occurrence and distribution of tin, with a bibliography, see F. L. Hess and L. C. Graton, Bull. U. S. Geol. Survey No. 260, p. 160, 1904. A summary of tin localities is also given by W. P. Blake, in Mineral Resources U. S. for 1883–84, pp. 592 et seq., U. S. Geol. Survey, 1885.

[b] A recent discovery of native tin is noted by E. S. Simpson in Ann. Rept. Geol. Survey, West Australia, 1899, p. 52.

[c] See G. T. Prior, Mineralog. Mag., vol. 14, p. 21, 1904, on the composition of teallite, cylindrite, and franckeite. See also A. Stelzner, Neues Jahrb., 1893, pt. 2, p. 114, and A. Frenzel, idem, p. 125. On stannite and its alteration products from the Black Hills, see W. P. Headden, Am. Jour. Sci., 3d ser., vol. 45, p. 105, 1893.

[d] Described by W. C. Brögger, Zeitschr. Kryst. Min., vol. 16, p. 61, 1890.

[e] See A. Stelzner and A. Schertel, Jahrb. Berg. Hütt. König. Sachsen, 1886, p. 52, on tin in black blende from Freiberg. It has also been found in the zinc ores of the Slocan district, British Columbia. See Rept. Comm. on Zinc Resources, etc., of British Columbia, Mines Branch, Dept. Interior, Ottawa, 1906.

[f] Zeitschr. Kryst. Min., vol. 25, p. 467, 1896.

[g] Idem, vol. 31, p. 279, 1899.

[h] Bull. Soc. min., vol. 11, p. 58, 1888.

[i] Compt. Rend., vol. 20, p. 227, 1849.

[j] Idem, vol. 39, p. 135, 1854.

[k] Idem, vol. 46, p. 764, 1858. Details not given.

[l] Idem, vol. 53, p. 161, 1861.

[m] Idem, vol. 96, p. 701, 1883.

the formation of crystalline stannic oxide when the amorphous compound, mixed with calcium chloride and ammonium chloride, was subjected to a white heat.

According to C. Doelter,[a] cassiterite is perceptibly soluble in water at 80°, and more so in presence of sodium fluoride. Some recrystallization from the solution was observed. This solubility is also indicated by several natural occurrences of tin. S. Meunier[b] found 0.5 per cent of SnO_2 in an opaline deposit, resembling geyserite, from a thermal spring in Selangor. J. H. Collins[c] reports tinstone as a cement in certain Cornish conglomerates, as an impregnation in long-buried horns of deer, as pseudomorphs after feldspar,[d] and as cappings on crystals of quartz. He also notes that cassiterite crystals often line fissures in quartz, the latter containing numerous fluid inclusions. An incrustation resembling "wood tin" was found by Collins on an ingot of ancient tin, having been formed by slow oxidation of the metal. Furthermore, Collins reports secondary crystallizations of cassiterite on reniform masses of "wood tin," and all of this evidence he regards as proof that the Cornish ores are of aqueous origin. Pseudomorphs of cassiterite after hematite were found by F. A. Genth[e] in tin ores from Durango, Mexico, and he also cites an observation by W. Semmons, who described specimens of bismuthinite coated with concentric layers of tinstone. It is possible in some of these cases that the tin-bearing solutions may have been derived from the oxidation of stannite, but this point seems to have received little or no consideration.

Cassiterite has been noted as a probably original constituent of igneous rocks,[f] but it more commonly occurs in veins or stringers of quartz, under conditions which indicate a secondary deposition. As a rule, tin-bearing veins are found in or near persilicic rocks, such as pegmatites and altered granites. Sometimes the association is with quartz porphyry, as at Mount Bischoff, in Tasmania, and at certain Mexican mines; but at other localities of tin in Mexico the prevailing rock is rhyolite or rhyolite tuff. In these instances, as at the Potrillos mine, in Durango, the ore is found along the fault planes in the

[a] Min. pet. Mitth., vol. 11, p. 325, 1890.

[b] Compt. Rend., vol. 110, p. 1083, 1890.

[c] Mineralog. Mag., vol. 4, pp. 1, 103, 1880, and vol. 5, p. 121, 1883.

[d] According to C. Reid and J. B. Scrivenor, Mem. Geol. Survey Eng. and Wales, Geology of country near Newquay, p. 39, 1906, the so-called pseudomorphs are replacements of orthoclase by an aggregate of cassiterite, muscovite, and quartz. On the genesis of the Cornish ores, see also J. B. Hill and D. A. MacAlister, idem, Geology of Falmouth, Truro, etc., p. 167.

[e] Proc. Am. Phil. Soc., vol. 24, p. 23, 1887. L. V. Pirsson (Am. Jour. Sci., 3d ser., vol. 42, p. 407, 1891) has described crystals of hematite inclosing cassiterite, from the same locality.

[f] See *ante*, p. 291, in chapter on rock-forming minerals.

rhyolite.[a] The Cacaria mine, also in Durango, is in quartz porphyry. In the Malay Peninsula, according to R. A. F. Penrose,[b] the prevalent stanniferous rocks are granitic, or detrital matter derived from granite; but at Chongkat Pari, in Perak, cassiterite is extracted from limestone, and at Bruseh, Perak, it is found in seams in sandstone. These abnormal occurrences are perhaps due, as Penrose suggests, to infiltration of tin-bearing solutions—a supposition which becomes probable in the light of evidence already cited.

The typical mode of occurrence of tin ores is in quartz veins cutting granite, the walls of the latter rock being altered into greisen. Greisen is essentially a granite in which the feldspars have been transformed into mica and of which topaz and tourmaline are frequent constituents. The mica is often, but not invariably, lithia bearing, either ordinary lepidolite or zinnwaldite. Bismuth ores, wolfram, and arsenopyrite are common associates of the tinstone.

These mineralogical data, the usual presence in stanniferous veins of species containing fluorine and boron, and also the alteration of the granite walls, have led to the very general belief that tin deposits of the ordinary type have been formed by the injection of vapors carrying the two elements above named and also the tin. This belief is strengthened by the various syntheses of cassiterite, in which boric oxide and chloride or fluoride of tin have taken part. The significance of the very rare mineral nordenskiöldine, with its tin and boron together, here becomes apparent, although the species has not been found in any vein or deposit of the usual stanniferous type, but only in a dike of elæolite syenite. Ordinarily the two elements are separated, the boron going to the tourmaline molecules and the tin to form cassiterite. Fluorine is represented by topaz, fluorite, or apatite, and sometimes by the lithia-bearing phosphates triphylite and amblygonite.[c] In some localities formerly worked for tin the lithia minerals, especially amblygonite and lepidolite, are now the species of chief commercial value.

American deposits of tin, more or less resembling those of Cornwall and Saxony, are found in the York region, Alaska; in Rockbridge

---

[a] See C. W. Kempton, Trans. Am. Inst. Min. Eng., vol. 25, p. 997, 1896, and W. R. Ingalls, idem, p. 147. On the Sain Alto mines, Zacatecas, see E. Halse, idem, vol. 29, p. 502, 1900, and J. N. Nevius, Eng. and Min. Jour., vol. 75, p. 920, 1903. This locality is also rhyolitic. On the tin deposits of Guanajuato, see A. H. Bromly, Trans. Am. Inst. Min. Eng., vol. 36, p. 227, 1906.

[b] Jour. Geol., vol. 11, p. 135, 1903. On the ores of Banca and Billiton, see R. Beck, Zeitschr. prakt. Geol., 1898, p. 121. W. R. Rumbold (Bull. Am. Inst. Min. Eng., September, 1906) has described the tin deposits of the Kinta Valley, Malay States. He mentions deposits in limestone.

[c] For discussions on the genesis of cassiterite veins see A. Daubrée, Études synthétiques de géologie expérimentale, pp. 28–71; J. H. L. Vogt, Zeitschr. prakt. Geol., 1895, p. 145, and Trans. Am. Inst. Min. Eng., vol. 31, p. 125, 1901; and W. Lindgren, idem, vol. 30, p. 578, 1900. On the Mount Bischoff mines, see W. von Fircks, Zeitschr. Deutsch. geol. Gesell., vol. 51, p. 431, 1899. See also F. Gautier, Actes Soc. sci. Chili, vol. 5, p. 82, 1895.

County, Virginia, and near El Paso, Texas. The Alaskan field has been well studied by A. J. Collier,[a] who describes both lodes and placers. The typical cassiterite is disseminated in more or less altered granitic dikes, essentially greisen, consisting of quartz, zinnwaldite, calcite, and fluor spar. In one case the ore is intimately associated with tourmaline, and it also occurs in veins which cut through metamorphic slates—a rather unusual development. At the Cash mine, in Virginia, according to L. C. Graton,[b] the ore is in quartz veins in granite, the walls of the veins being converted into greisen. W. H. Weed [c] and G. B. Richardson [d] have studied the tin deposits of the Franklin Mountains near El Paso, where the ore is found in quartz under conditions which Weed thinks resemble those of Cornwall. The Temescal deposit, in southern California, as described by H. W. Fairbanks,[e] may also belong to this class. The vein material consists almost wholly of tourmaline and quartz, formed by gradual replacement of the granite walls.

Another mode in which cassiterite occurs is as an original constituent in pegmatite. It is thus found, although scantily, in the famous localities in Maine for lithia tourmalines and lepidolite. The workable cassiterite of the Carolina tin belt, according to L. C. Graton,[f] is also in pegmatite, none being found in the wall rock. Here again lithia minerals are found, namely, lithiophilite and spodumene. The tin ores of the Black Hills, in South Dakota, seem to belong under this heading, and the Etta mine especially is noted for its enormous crystals of spodumene and columbite. In this locality crystalline faces of spodumene are exposed which are from 30 to 40 feet long; and in the Ingersoll claim a single mass of columbite is said to have weighed more than 2,000 pounds.[g] Cassiterite in pegmatite, accompanied by corundum, is reported by P. F. Molengraaf [h] from Swazieland, South Africa.

The tin ores of Bolivia represent still another class of associations. Cassiterite in masses resembling hematite, and the four sulphosalts of tin, are here found in veins carrying ores of silver, lead, and

---

[a] Bull. U. S. Geol. Survey No. 229, 1904; and also in Bull. No. 225, p. 154, 1903; Bull. No. 259, p. 120, 1905; and Eng. and Min. Jour., vol. 76, p. 999, 1903. See also A. H. Brooks, Mineral Resources U. S. for 1900, p. 267, U. S. Geol. Survey, 1901, and Bull. No. 213, p. 92, 1902; and E. Rickard, Eng. and Min. Jour., vol. 75, p. 30, 1903.

[b] Bull. U. S. Geol. Survey No. 293, p. 44, 1906. See also T. Ulke, Mineral Resources U. S. for 1893, p. 178, U. S. Geol. Survey, 1894.

[c] Bull. U. S. Geol. Survey No. 178, 1901, and also in Bull. No. 213, p. 170, 1902.

[d] Bull. U. S. Geol. Survey No. 285, p. 146, 1905.

[e] Am. Jour. Sci., 4th ser., vol. 4, p. 39, 1897.

[f] Bull. U. S. Geol. Survey No. 293, 1906, and also in Bull. No. 260, p. 188, 1904. Other papers on the Carolina belt are by J. H. Pratt, Mineral Resources U. S. for 1903, p. 337, U. S. Geol. Survey, 1904, and Pratt and D. B. Sterrett, Bull. No. 19, North Carolina Geol. Survey, 1904.

[g] See W. P. Blake, Trans. Am. Inst. Min. Eng., vol. 13, p. 691, 1885. On the Black Hills mines, see also E. W. Claypole, Am. Geologist, vol. 9, p. 228, 1892, and J. D. Irving, *Prof. Paper* U. S. Geol. Survey No. 26, p. 95, 1904.

[h] See abstract in Zeitschr. prakt. Geol., 1900, p. 146.

bismuth in rocks of recent volcanic origin. According to A. W. Stelzner[a] the rock is commonly dacite or trachyte; but at Potosi, as described by A. F. Wendt,[b] the matrix is rhyolite. Boron and fluosilicates are absent. The vein matter is quartz, with carbonates and barite. In these deposits we evidently have a transition between the ordinary tin-bearing vein and the type of vein characterized by silver-lead ores.

ARSENIC, ANTIMONY, AND BISMUTH.

Arsenic, antimony, and bismuth are three closely related elements. Arsenic, from a purely chemical point of view, is a nonmetal; for, despite its metallic appearance, it is an acid-forming element, and only in exceptional cases does it play the part of a base. Antimony is more commonly acid than basic, but in bismuth the basic character is strongly predominant, except in its sulphosalts.

All three elements are found native, and also in many closely related compounds. Among the latter the sulphosalts of silver, lead, copper, and tin have already been mentioned, and few others remain to be named. Berthierite is a sulphantimonite of iron, $FeSb_2S_4$, and lorandite is a sulpharsenite of thallium, $TlAsS_2$. There are also a number of arsenides, antimonides, and bismuthides, of silver, copper, nickel, cobalt, platinum, etc., which are best considered under the several metals that characterize them. For present purposes it is enough to mention the iron arsenides, löllingite, $FeAs_2$, and leucopyrite, Fe_3As_4, and also the sulpharsenide, arsenopyrite, FeAsS. Arsenopyrite or mispickel is the most important ore of arsenic.

Native arsenic, native antimony, and native bismuth are all rather common minerals, and with them the arsenide of antimony, allemontite, $SbAs_3$, may be grouped. There are also natural sulphides, selenides and tellurides, as follows:

Realgar	AsS.
Orpiment	As_2S_3.
Stibnite	Sb_2S_3.
Metastibnite	Sb_2S_3.
Bismuthinite	Bi_2S_3.
Guanajuatite	Bi_2Se_3.
Tetradymite	Bi_2Te_3.
Joseite[c]	Bi_2Te.
Wehrlite[c]	Bi_3Te_2.
Grünlingite	Bi_4TeS_3.
Kermesite	Sb_2S_2O.

[a] Zeitschr. Deutsch. geol. Gesell., vol. 49, p. 51, 1897. See also M. Frochot, Ann. mines, 9th ser., vol. 19, p. 186, 1901.

[b] Trans. Am. Inst. Min. Eng., vol. 19, p. 90, 1890.

[c] Formulæ approximate only. Sulphur or selenium partly replaces tellurium.

Several of these minerals have been produced artificially. J. Durocher[a] prepared stibnite and bismuthinite by the action of hydrogen sulphide upon the volatilized chlorides of antimony and bismuth. H. de Senarmont[b] found that when pulverized realgar or orpiment was heated to 150° with a solution of sodium bicarbonate in a sealed tube they dissolved and were later redeposited as crystallized realgar. Amorphous antimony sulphide, treated in the same way, at 250°, also dissolved and crystallized as stibnite. The precipitated sulphide of bismuth, similarly heated to 200° with a solution of an alkaline sulphide, gave crystals of bismuthinite. E. Weinschenk[c] obtained orpiment and stibnite by heating solutions of arsenic or antimony with ammonium sulphocyanate to 180° in a sealed tube. According to A. Carnot,[d] stibnite and bismuthinite are easily formed by passing hydrogen sulphide at a dull red heat over other compounds of antimony or bismuth. Realgar, orpiment, stibnite, and bismuthinite are all reported by Mayençon[e] as found among the sublimation products of a burning coal mine.[f]

C. Doelter[g] states that stibnite at 80° is slightly soluble in water and that recrystallization from the solution is also perceptible. The same statement holds for arsenopyrite, FeAsS. In several localities the deposition of arsenical or antimonial sulphides from hot springs has been observed. W. H. Weed and L. V. Pirsson[h] report both realgar and orpiment from a hot spring in the Yellowstone National Park, and G. F. Becker[i] found sulphides of arsenic and antimony in a sinter at Steamboat Springs, Nevada. In 3,403 grams of this sinter, as analyzed by W. H. Melville, were found the following substances:

Sulphides, etc., found in sinter.

	Grams.
Au	0.0034
Ag	.0012
HgS	.0070
PbS	.0720
CuS	.0424
$Sb_2S_3+As_2S_3$	78.0308
Fe_2O_3	3.5924

[a] Compt. Rend., vol. 32, p. 825, 1851.

[b] Ann. chim. phys., 3d ser., vol. 32, p. 129, 1851.

[c] Zeitschr. Kryst. Min., vol. 17, p. 497, 1890.

[d] See L. Bourgeois, Reproduction artificielle des minéraux, pp. 41, 42.

[e] Compt. Rend., vol. 86, p. 491, 1878; vol. 92, p. 854, 1881.

[f] On the conditions governing the formation of orpiment and realgar, see W. Borodowsky, Sitzungsb. Naturf. Gesell. Univ. Dorpat, vol. 14, p. 159. Also in Chem. Abstracts, vol. 1, p. 1106, 1907.

[g] Min. pet. Mitth., vol. 11, p. 322, 1890.

[h] Am. Jour. Sci., 3d ser., vol. 42, p. 401, 1891. At another spring in the Park, Arnold Hague (idem, vol. 34, p. 171, 1887) found a deposit of scorodite, an arsenate of iron.

[i] Mon. U. S. Geol. Survey, vol. 13, p. 344, 1888.

The antimony sulphide was in the amorphous, orange-colored form, to which Becker gave the name of metastibnite. Crystals of ordinary stibnite have since been discovered by W. Lindgren [a] in the same sinter, apparently of quite recent formation. The locality, it must be observed, is one which yields mercury, and G. F. Becker [b] has reported stibnite from several quicksilver mines in California. A similar association of stibnite and cinnabar is found at Monte Amiata in Tuscany; [c] and at Huitzuco, Mexico, stibnite occurs with livingstonite, kermesite, barcenite, and some cinnabar in a matrix of gypsum.[d] Cinnabar has also been noted in the antimony mines of Corsica.[e] According to Coquand,[f] the antimony ores at Pereta, Tuscany, are of solfataric origin. This mode of deposition, which genetically connects antimony and mercury, may be ascribed to the fact that both metals form easily volatile compounds. The same property is shared by arsenic, but deposits of other than solfataric nature are known. At least, there are deposits in which no indication of solfataric action can now be discerned. The sulphides of arsenic and antimony are easily soluble in alkaline solutions, and in that way may be transported to points far distant from their original ore bodies. The sulphide of bismuth is much less soluble.

Stibnite is the most important ore of antimony. Its deposition from solution is in most cases evident, and its alkaline solutions, which also dissolve silica, seem to have formed the typical occurrences, in which stibnite is intimately associated with quartz. It is so found in the mines of Sevier County, Arkansas; [g] in Mexico, and in Corsica, where the ore bodies occur in sericitic schists. At Kostainik, in Servia, according to R. Beck and W. von Fircks,[h] the stibnite is found in trachyte, in graywacke, and also as replacements in limestone. Arsenopyrite also occurs most commonly with quartz, oftenest in metamorphic schists and sometimes in serpentine.[i] When either arsenic, antimony, or bismuth is found in a metalliferous vein, associated with silver, copper, or lead, it is usually combined with those metals in the form of sulphosalts.

---

[a] Trans. Am. Inst. Min. Eng., vol. 36, p. 27, 1906.

[b] Op. cit., p. 389.

[c] B. Lotti, Zeitschr. prakt. Geol., 1901, p. 43.

[d] J. G. Aguilera, Trans. Am. Inst. Min. Eng., vol. 32, p. 307, 1902.

[e] Nentien, Ann. mines, 9th ser., vol. 12, p. 251, 1897.

[f] Bull. Soc. géol., 2d ser., vol. 6, p. 91, 1848–49.

[g] See C. E. Wait, Trans. Am. Inst. Min. Eng., vol. 8, p. 42, 1879; J. C. Branner, Ann. Rept. Geol. Survey, Arkansas, 1888, vol. 1, p. 136, and G. H. Ashley, Proc. Am. Phil. Soc., vol. 36, p. 306, 1897.

[h] Zeitschr. prakt. Geol., 1900, p. 33.

[i] On the arsenic mines of Hastings County, Ontario, see J. W. Wells, Rept. Bur. Mines, Ontario, 1902, p. 101. J. L. Cowan (Eng. and Min. Jour., vol. 78, p. 105, 1904) has described an arsenic mine at Brinton, Virginia. For the antimony mines of Nova Scotia, see W. R. Askwith, Canadian Mining Review, vol. 20, p. 173, 1901.

By oxidation of the sulphides, a large number of secondary minerals can be formed. First of all are the oxides, as follows:

Arsenolite [a]	As_2O_3,	isometric.
Claudetite [a]	As_2O_3,	monoclinic.
Senarmontite	Sb_2O_3,	isometric.
Valentinite	Sb_2O_3,	orthorhombic.
Cervantite	Sb_2O_4.	
Bismite, or bismuth ocher	Bi_2O_3.	
Stibiconite	$H_2Sb_2O_6$.	

Bismuth also forms two basic carbonates, bismutite and bismutosphærite, and a rare oxychloride, daubréeite. The oxides of antimony form important ore bodies at Altar, Sonora, Mexico,[b] and in Neocomian limestone at Mount Hamimat, province of Constantine, Algeria.[c]

From oxidation of the sulphosalts, a large number of arsenates, antimonates, and various compounds of bismuth have been derived. Some of these were mentioned in the preceding sections of this chapter; others are salts of calcium, magnesium, iron, or manganese. For example, pharmacolite is an arsenate of lime, pharmacosiderite an arsenate of iron, and sarkinite an arsenate of manganese. Atopite and romeite are antimonates of lime. Some of these compounds, and there are many others, may have been formed by the action of percolating arsenical or antimonial solutions upon carbonates of lime, magnesia, manganese, or iron, or upon hydroxides of the two metals last named. There are also arsenates of bismuth, and a tellurate, a vanadate, and a silicate of the same base. The strange mineral longbanite is an antimonio-silicate of manganese and iron; derbylite and lewisite are antimonio-titanates of iron and lime, respectively; and mauzeliite is a similar salt of calcium and lead. Derbylite, lewisite, and tripuhyite, $Fe_2Sb_2O_7$, are found in the cinnabar-bearing gravels of Tripuhy, Brazil.[d] They were derived from mica schists, but their association with cinnabar is suggestive.

NICKEL AND COBALT.[e]

Among the minor constituents of igneous rocks, nickel is one of the commonest. Cobalt also is widely diffused, but in much smaller

[a] The true molecular weight, as shown by the vapor density, is more probably represented by the formula As_4O_6. A similar doubling may be proper for the other oxides and sulphides of this group.

[b] E. T. Cox, Am. Jour. Sci., 3d ser., vol. 20, p. 421, 1880.

[c] Coquand, Bull. Soc. géol., 2d ser., vol. 9, p. 342, 1851–52.

[d] See E. Hussak and G. T. Prior, Mineralog. Mag., vol. 11, pp. 80, 176, 302, 1895.

[e] For a general paper upon nickel and its occurrences, see P. Argall, Proc. Colorado Sci. Soc., vol. 4, p. 395, 1893. A note by A. G. Charlton follows (p. 420) on Colorado nickel ores. On nickel in the Mansfeld copper shales, see Baeumler, Zeitschr. Deutsch. geol. Gesell., vol. 9, p. 25, 1857. On cobalt ores at Schweina, Thuringia, see F. Beyschlag, Zeitschr. prakt. Geol., 1898, p. 1. On cobalt in Mexico, G. de J. Caballero, Mem. Soc. cient. Ant. Alzate, vol. 18, p. 197, 1902. O. Stutzer (Zeitschr. prakt. Geol., 1906, p. 294) has described tourmaline-bearing cobalt veins at San Juan, Atacama, Chile. The ore is *cobaltite*.

proportions.[a] In 262 analyses of igneous rocks made in the laboratory of the United States Geological Survey an average of 0.0274 per cent of nickel oxide was found. Had it been sought for in all cases, this figure might have been slightly reduced, but perhaps not materially.

Nickel and cobalt are characteristic elements in meteoric irons, and also in terrestrial irons of similar character. Indeed, some of the "irons" of which analyses are given in another chapter of this book[b] are more truly described as native nickel, that being the metal which predominates in them. Awaruite and josephinite are nickel irons of this kind, in which the percentage of nickel reaches 60 or even more.

The ores of these metals fall into three principal classes, namely, sulphides or arsenides, oxides, and silicates. In the first class the chief minerals are as follows:

Millerite	NiS.	Jaipurite	CoS.
Beyrichite	Ni_3S_4.	Linnæite	Co_3S_4.
Polydymite[c]	Ni_4S_5.	———	
Niccolite	$NiAs$.	———	
Chloanthite	$NiAs_2$.	Smaltite	$CoAs_2$.
Rammelsbergite	$NiAs_2$.	Safflorite	$CoAs_2$.
———		Skutterudite[d]	$CoAs_3$.
Gersdorffite	$NiAsS$.	Cobaltite	$CoAsS$.
Pentlandite[e]	$(FeNi)S$.	———	
———		Carrollite	Co_2CuS_4.

With these minerals we may include the nickel telluride, melonite, and the antimonide, breithauptite, $NiSb$. Ullmannite is a sulphide of antimony and nickel,[f] $NiSbS$. Corynite and wolfachite are mixtures of a salt of the last type with the corresponding salt $NiAsS$. Glaucodot is sulpharsenide of cobalt and iron, and alloclasite is similar, but with bismuth partly replacing arsenic. Another mineral of the formula $NiCoS_2Sb_2$ has been named willyamite.

Arsenides and antimonides of nickel are known as accidental furnace products.[g] The crystalline sulphides of cobalt and nickel have also been repeatedly prepared artificially. H. de Senarmont[h] heated solutions of potassium sulphide with nickel or cobalt chloride to temperatures between 160° and 180° in a sealed tube, and obtained the

[a] On the wide diffusion of cobalt and nickel in nature, see K. Kraut, Zeitschr. angew. Chemie, 1906, p. 1793.

[b] See *ante*, p. 269.

[c] The Sudbury polydymite is very nearly Ni_3FeS_5.

[d] There is also a variety containing much nickel replacing cobalt. Bismutosmaltite, $Co(AsBi)_3$, is a related mineral.

[e] Another nickel-iron sulphide has been called gunnarite. Its formula is near $Fe_3Ni_2S_8$. Still another, akin to pentlandite, is the incompletely described heazlewoodite.

[f] A similar sulphide, with bismuth partly replacing antimony, has been named kallilite.

[g] See L. Bourgeois, Reproduction artificielle des minéraux, p. 35, for old instances. Also A. Brand, Zeitschr. Kryst. Min., vol. 12, p. 234, 1887, on breithauptite.

[h] Ann. chim. phys., 3d ser., vol. 32, p. 129, 1851.

compounds NiS, Ni_3S_4, and Co_3S_4, corresponding to the natural minerals. C. Geitner[a] also produced crystals of Ni_3S_4 by heating metallic nickel with sulphurous acid or a solution of nickel sulphite under pressure to 200°. E. Weinschenk[b] heated solutions of cobalt or nickel salts with ammonium sulphocyanate to 180° in a sealed tube, and so produced crystalline NiS or CoS, respectively. T. Hiörtdahl[c] also produced jaipurite by fusing cobalt sulphate with barium sulphide and common salt.

These scanty data show that the minerals of this group may be produced in either the wet or the dry way, and their natural occurrences point to the same conclusion. Millerite, for instance, forms beautiful tufts of slender, hairlike needles in geodes lined with crystals of dolomite. Specimens of this kind are familiar objects in cabinets of minerals. Millerite is also reported by Des Cloizeaux[d] as found in the coal measures of Belgium, and he mentions linnæite in coal from Glamorganshire, Wales. On the other hand, as J. H. L. Vogt[e] has shown, the nickeliferous pyrrhotites are often, if not always, distinct segregations from molten magmas. On this subject, however, controversy still reigns, and especially with reference to the nickel ores of Sudbury, Canada. Here the ores are chiefly pyrrhotite with admixtures of pentlandite, a certain amount of chalcopyrite being also present. The matrix is norite, although the earlier observers termed it diorite. Their magmatic origin has been advocated by R. Bell,[f] H. B. von Foullon,[g] T. L. Walker,[h] A. P. Coleman,[i] D. H. Browne,[j] and others. A. E. Barlow,[k] for example, repeatedly speaks of the "nickel-bearing eruptive." Browne compares the occurrences at Sudbury with the phenomena observed in cooling a copper-nickel matte, in which the copper sulphides concentrate along the margins of the mass, and the nickel sulphides at the center. This arrangement of ores, chalcopyrite near the wall rock, then pyrrhotite carrying nickel, and finally nickel sulphide, is the order observed at Sudbury.

---

[a] Liebig's Annalen, vol. 129, p. 350, 1864.

[b] Zeitschr. Kryst. Min., vol. 17, p. 497, 1890.

[c] Compt. Rend., vol. 65, p. 75, 1867. Jaipurite is also known as syepoorite.

[d] Bull. Soc. min., vol. 3, p. 170, 1880.

[e] Zeitschr. prakt. Geol., 1893, pp. 125, 357.

[f] Bull. Geol. Soc. America, vol. 2, p. 125, 1890. Another paper by Bell, on Sudbury, appears in Ann. Rept. Geol. Survey Canada, 2d ser., vol. 5, F, 1890–91.

[g] Jahrb. K.-k. geol. Reichsanstalt, vol. 42, p. 223, 1892. The nickel ores of Schweiderich, Bohemia, are described as analogous to those of Sudbury.

[h] Quart. Jour. Geol. Soc., vol. 53, p. 40, 1897.

[i] Bull. Geol. Soc. America, vol. 15, p. 551, 1904. In Rept. Ontario Bur. Mines, 1904, pt. 1, p. 192, Coleman has a long paper on the "Northern Nickel Range." The report of the same bureau for 1905, pt. 3, contains a monograph by Coleman on the Sudbury ores.

[j] School of Mines Quart., vol. 16, p. 297, 1895; and Econ. Geol., vol. 1, p. 487, 1906.

[k] Econ. Geol., vol. 1, pp. 454, 545, 1906.

R. Beck,[a] C. W. Dickson,[b] and W. Campbell and C. W. Knight,[c] on the other hand, have argued strongly in favor of a secondary origin of these ores—a deposition from circulating solutions.[d] A similar view is expressed by F. W. Voit [e] concerning the nickel ores of Dobschau, Hungary. Here the arsenides of nickel occur in a carbonate gangue at or near contacts of diorite. At Mine La Motte, Missouri, linnæite is found with lead and copper ores in bodies which C. R. Keyes [f] describes as metasomatic replacements in limestone. Small quantities of nickel are shown in analyses of the adjacent granites.

At the Gap mine, in Lancaster County, Pennsylvania, pyrrhotite and chalcopyrite occur with secondary millerite in an amphibolite, which J. F. Kemp [g] thinks is an altered gabbro or norite. This deposit Kemp regards as originally magmatic. In the serpentines of Malaga, Spain, according to F. Gillman,[h] niccolite is found, altered to silicates of nickel at the surface, but associated with chromite and augite in the norites below. Here again a magmatic origin is indicated. The nickeliferous pyrrhotites of the southern Schwarzwald are regarded by E. Weinschenk [i] as not magmatic.

Near Lake Temiskaming, Ontario, an extraordinary group of deposits of associated cobalt, nickel, arsenic, and silver ores has recently (1903) been discovered.[j] In this district native silver and native bismuth are found, together with niccolite, chloanthite, smaltite, millerite, cobaltite, argentite, dyscrasite, pyrargyrite, tetrahedrite, arsenopyrite, etc., in relations which are interpreted by Miller as suggesting a deposition from heated waters, which latter were "probably associated with the post-Middle Huronian diabase and gabbro eruption." According to Miller, the deposits are analogous to those of Annaberg, Saxony, and Joachimsthal, Bohemia, which are classical localities for cobalt and nickel minerals. The original source of the Temiskaming ores has not yet been clearly determined.

---

[a] The Nature of Ore Deposits, Weed's translation, p. 41.

[b] Trans. Am. Inst. Min. Eng., vol. 34, p. 3, 1904. See also Jour. Canadian Min. Inst., vol. 9, p. 236, 1906.

[c] Eng. and Min. Jour., vol. 82, p. 909, 1906. These authors base their opinions on the microscopic structure of the pyrrhotite.

[d] Other memoirs upon Sudbury and its ores are by J. H. Collins, Quart. Jour. Geol. Soc., vol. 44, p. 834, 1888; J. Garnier, Mém. Soc. ingén. civils (France), vol. 44, p. 239; E. R. Bush, Eng. and Min. Jour., vol. 57, p. 245, 1904; T. L. Walker, Am. Jour. Sci., 3d. ser., vol. 47, p. 312, 1894; F. W. Clarke and C. Catlett, Bull. U. S. Geol. Survey No. 64, p. 20, 1890; and L. P. Silver, Canadian Min. Rev., vol. 21, p. 207, 1902.

[e] Jahrb. K.-k. geol. Reichsanstalt, vol. 50, p. 717, 1900.

[f] Missouri Geol. Survey, vol. 9, pt. 4, p. 82, 1896.

[g] Trans. Am. Inst. Min. Eng., vol. 24, p. 620, 1894.

[h] Trans. Inst. Min. and Met. (London), vol. 4, p. 159, 1896.

[i] Zeitschr. prakt. Geol., 1907, p. 73.

[j] See the reports by W. G. Miller, Rept. Ontario Bur. Mines, 1904, pt. 1, p. 96; 1905, pt. 2. Also in Eng. and Min. Jour., vol. 76, p. 888, 1903.

They may represent a leaching of the accompanying eruptive rocks, or they may have been brought from below; at all events, they are not igneous segregations.[a]

By oxidation or carbonation the sulphides and arsenides of nickel and cobalt are transformed into sulphates, arsenates, carbonates, oxides, etc. Morenosite, $NiSO_4.7H_2O$; bieberite, $CoSO_4.7H_2O$; the arsenates, roselite, erythrite, annabergite, forbesite, and cabrerite; the carbonates sphærocobaltite, zaratite, and remingtonite; the oxide bunsenite; and the hydroxides asbolite, heubachite, heterogenite, transvaalite, etc., are among these products of alteration. Bunsenite, NiO, was prepared artificially by J. J. Ebelmen,[b] through the action of lime on fused nickel borate. Ferrières and Dupont[c] also obtained it by heating nickel chloride to redness in a current of steam. Neither process seems to bear any close relation to the observed occurrences of bunsenite in nature. Asbolite, or earthy cobalt, is an indefinite mixture of manganese and cobalt hydroxides, and has some significance as a workable ore.[d] This association of cobalt and manganese is not uncommon, and many manganese ores contain more or less cobalt.

The hydrous silicates of nickel form a distinct class of ores, differing genetically from the sulphides. They are found in connection with serpentine or other hydromagnesian rocks; and in some instances, if not always, they represent concentrations from peridotitic magmas, and especially from nickeliferous olivine. At Riddles, Oregon, for example, the parent rock is a saxonite or harzburgite, containing, as shown by my own analysis,[e] 0.10 per cent of NiO. The olivine separated from the rock contained 0.26 per cent; and from this mineral the nickel silicates were doubtless formed. Similar silicate ores are found in North Carolina;[f] at Revda in the Urals; at Frankenstein, Prussian Silesia, in serpentine; and at Mount Avala, Servia, with mercurial minerals. The most important deposits, however, are

[a] These ores have recently been studied microscopically by W. Campbell and C. W. Knight (Econ. Geol., vol. 1, p. 767, 1906), who find that smaltite was first formed, then niccolite, then calcite, with argentite, native silver, and native bismuth later.

[b] Compt. Rend., vol. 33, p. 525, 1851.

[c] See L. Bourgeois, Reproduction artificielle des minéraux, p. 51.

[d] As at Mine La Motte, Missouri, and in New Caledonia. On the New Caledonia cobalt ores, see G. M. Colvocoresses, Eng. and Min. Jour., vol. 76, p. 816, 1903, and A. Liversidge, Minerals of New South Wales, pp. 275 et seq.

[e] F. W. Clarke and J. S. Diller, Bull. U. S. Geol. Survey No. 60, p. 21, 1890. See also, with regard to this locality, A. R. Ledoux, Canadian Min. Rev., vol. 20, p. 84, 1901; W. L. Austin, Proc. Colorado Sci. Soc., vol. 5, p. 173, 1898; and H. B. von Foullon, Jahrb. K.-k. geol. Reichsanstalt, vol. 42, p. 223, 1892. Von Foullon also describes the deposits at Revda, Frankenstein, and Mount Avala. A recent report on the Riddles ores, by G. F. Kay, appears in Bull. U. S. Geol. Survey No. 315, p. 120, 1907.

[f] See H. J. Biddle, Mineral Resources U. S. for 1886, p. 170, U. S. Geol. Survey, 1887. The mother rock here is dunite. See also A. E. Barlow, Jour. Canadian Min. Inst., vol. 9, p. 303, 1906. Barlow regards these ores as formed by the leaching of the peridotite.

in New Caledonia,[a] where asbolite also occurs. Chromite and various hydromagnesian minerals are generally associated with the nickel ores.

These silicates are rarely, if ever, found as definite mineral species, although they have been described as such. Genthite appears to be $H_4Mg_2Ni_2(SiO_4)_3.4H_2O$, and connarite is near $H_4Ni_2Si_3O_{10}$. Another silicate from New Caledonia, called nepouite,[b] has been given the formula $(NiMg)_3Si_2O_7.2H_2O$. Alipite, desaulesite, garnierite, noumeite, pimelite, refdanskite, and röttisite are uncertain substances, mixtures of nickel silicates with magnesian compounds and free silica. The following analyses will serve to illustrate the variable composition of these ores:

Analyses of nickel silicates.

A. From Riddles, Oregon. Analysis by F. W. Clarke, Bull. U. S. Geol. Survey No. 60, p. 21, 1890.

B. From Riddles. Analysis by Hood,[a] Mineral Resources U. S. for 1882, p. 404, U. S. Geol. Survey, 1883.

C, D, E. From New Caledonia. Analyses by A. Liversidge, Minerals of New South Wales, pp. 275–280. Liversidge gives 19 analyses in all, including several by Leibius.

	A.	B.	C.	D.	E.
SiO_2	44.73	40.55	48.25	38.35	50.15
Al_2O_3	1.18	1.33	.55	.40	.57
Fe_2O_3				.15	trace
NiO	27.57	29.66	14.60	32.52	10.20
MgO	10.56	21.70	16.40	10.61	17.43
H_2O at 100°	8.87	7.00	10.95	6.44	11.28
H_2O redness	6.99		8.82	11.53	10.37
	99.90	100.24	99.57	100.00	100.00

[a] Probably this sample was dried at or near 100° before analyzing.

In one respect all the ores of nickel seem to agree. Their magmatic associate is always a subsilicic rock, such as norite, peridotite, or sometimes diabase or diorite. In no case are they clearly shown to have originated from persilicic magmas.

CHROMIUM.

Like nickel, chromium is widely diffused in the subsilicic rocks, the average proportion found in 256 analyses of igneous rocks in the laboratory of the United States Geological Survey being 0.05 per cent of Cr_2O_3. The native metal has not been found, nor are any terrestrial sulphides of chromium known, although the mineral daubréelite, $FeCr_2S_4$, occurs in some meteoric irons. The one important ore

[a] See A. Liversidge, Minerals of New South Wales, p. 275; J. Garnier, Compt. Rend., vol. 86, p. 684, 1878; D. Levat, Mém. Assoc. franç. av. sci., 1887, p. 534; and F. D. Power, Trans. Inst. Min. Met., vol. 8, p. 427, 1900. Liversidge gives several analyses of garnierite and noumeite. See also J. S. Leckie, Jour. Canadian Min. Inst., vol. 6, p. 169, 1903.

[b] E. Glasser, Compt. Rend., vol. 143, p. 1173, 1906. Also Ann. mines, 10th ser., vol. 4, p. 448, 1904.

of chromium is chromite, or chromic iron. There are also the lead chromates, mentioned in a previous section of this chapter; the two sulphates knoxvillite and redingtonite; and the silicates represented by chromiferous garnet, diopside, mica, and tourmaline. The clay-like silicates avalite, milosin, and alexandrolite also contain chromium as an essential constituent.[a] Dietzeite, from the Chilean niter beds, is an iodate and chromate of calcium. Of all these species chromite alone needs any further consideration.

In the chapter upon rock-forming minerals chromite was described as a member of the spinel group. Its ideal formula is $FeCr_2O_4$, but it rarely, if ever, is found in a state of even approximate purity. It commonly contains isomorphous admixtures of other spinels, whose presence is revealed in the analyses. The following examples will serve to illustrate its variations:[b]

Analyses of chromite.

A. From Price Creek, North Carolina. Analysis by C. Baskerville.

B. From Corundum Hill, North Carolina. Baskerville.

C. From Corundum Hill. Analysis by T. M. Chatard, in the laboratory of the United States Geological Survey.

D. From Webster, North Carolina. Analysis by H. W. Foote. Variety named mitchellite.[a] For A, B, and D, see J. H. Pratt and J. V. Lewis, North Carolina Geol. Survey, vol. 1, p. 369, 1905.

E. From Tampadel, lower Silesia. Analysis by Laszczynski. Described by H. Traube, Zeitschr. Deutsch. geol. Gesell., vol. 46, p. 50, 1894.

	A.	B.	C.	D.	E.
Cr_2O_3	59.50	57.20	45.94	39.95	41.23
Al_2O_3	7.15	7.82	2.51	29.28	24.58
FeO	25.02	25.68	42.90	13.90	19.04
MnO	.92	.69	.84	.....	.58
CoO, NiO	.....	.....	.16	.....	.....
CuO	.....	.....	.40	.....	.....
MgO	4.42	5.22	2.81	17.31	14.77
CaO	.....	.....	1.40	.....	.....
SiO_2	3.20	2.80	3.20	.....	.....
TiO_2	.....	.....	.36	.....	.....
P_2O_5	.....	.....	.12	.....	.....
	99.91	99.41	100.64	100.44	100.20

[a] Magnochromite is another name for a magnesian chromite.

Chromite was first produced artificially by J. J. Ebelmen,[c] who fused chromic oxide, ferric oxide, and boric oxide together, with a little tartaric acid added to reduce the iron to the ferrous state. By adding small amounts of alumina and magnesia the composition of the product was made to vary, like that of the natural mineral. J. Clouet[d] also prepared chromite by essentially the same process, only with trifling differences in detail. S. Meunier[e] obtained chromite by oxidizing an alloy of iron and chromium, and suggested

[a] See S. M. Losanitsch, Ber. Deutsch. chem. Gesell., vol. 28, p. 2631, 1895.

[b] See also table in Chapter X, on rock-forming minerals, p. 282. Two of the analyses there given are repeated here.

[c] *Ann. chim. phys.*, 3d ser., vol. 22, p. 228, 1848.

[d] *Idem*, 4th ser., vol. 16, p. 90, 1869.

[e] *Compt. Rend.*, vol. 110, p. 424, 1890.

that such an alloy might be brought up from great depths and oxidized by vapors near the surface of the earth. There is no direct evidence, however, to show that such an alloy exists in nature, and the common presence of chromite in meteorites indicates a different origin for the mineral.

Chromite is almost exclusively found in subsilicic rocks, such as peridotites and the serpentines derived from them. Its occurrence in placers as a detrital mineral is of course not excluded by this statement. It is distinctly a magmatic mineral, as Vogt and others have shown.[a]

MOLYBDENUM AND TUNGSTEN.

Although molybdenum and tungsten are members of the same elementary group with chromium, their geologic affinities are not the same. Chromium, as we have seen, is found characteristically in subsilicic rocks, while molybdenum and tungsten are commonly associated with granite. Neither metal is found free in nature, nor is either one widely diffused.

The principal ore of molybdenum is the sulphide, molybdenite, MoS_2. The molybdate of lead, wulfenite, has already been described in a previous section. Calcium molybdate, powellite, is a rare mineral, and natural molybdates of cobalt and magnesium are imperfectly known. Molybdic ocher is a common oxidation product of molybdenite. It is, as shown by W. T. Schaller,[b] a hydrous ferric molybdate, $Fe_2(MoO_4)_3.7\frac{1}{2}H_2O$.

Artificial molybdenite has been prepared by A. de Schulten.[c] Potassium carbonate was fused with sulphur, and molybdic oxide was gradually added, in successive portions, to the melt. Crystals of molybdenite were thus formed. Powellite, also, has been made by L. Michel,[d] who heated sodium molybdate, calcium chloride, and sodium chloride together. A little sodium tungstate was added to the mixture, in order to reproduce more exactly the natural mineral, in which some tungsten is found.

As a rule, molybdenite is a fairly pure compound, although Michel[e] has described a variety containing 28.37 per cent of bismuth.

---

[a] See J. H. L. Vogt, Zeitschr. prakt. Geol., 1894, with special reference to Norwegian deposits. In chromite at Kraubath, Styria, see F. Ryba, idem, 1900, p. 337; and in Asia Minor, K. E. Weiss, idem, 1901, p. 250. R. Helmhacker (Min. Industry, 1895, p. 94) describes Austrian localities. On chromite in Maryland, see W. Glenn, Trans. Am. Inst. Min. Eng., vol. 25, p. 481, 1896; and on Canadian ores, the same author in Seventeenth Ann. Rept. U. S. Geol. Survey, pt. 3, p. 261, 1896. M. Penhale (Min. Industry, 1895, p. 92) also describes Canadian chromite. The chromite of North Carolina is discussed by J. H. Pratt in Am. Jour. Sci., 4th ser., vol. 7, p. 281; and Trans. Am. Inst. Min. Eng., vol. 29, p. 17, 1899. See also J. H. Pratt and J. V. Lewis, North Carolina Geol. Survey, vol. 1, p. 369, 1905.

[b] Am. Jour. Sci., 4th ser., vol. 23, p. 297, 1907. Work done in the laboratory of the United States Geological Survey.

[c] Geol. Fören. Förhandl., vol. 11, p. 401, 1889.

[d] Bull. Soc. min., vol. 17, p. 612, 1894.

[e] Idem, vol. 22, p. 29, 1899.

It was evidently a mixture of molybdenite with bismuthinite. Bismuth is a not infrequent associate both of molybdenite and of wolfram.

At Crown Point, Washington, according to A. R. Crook,[a] large quantities of molybdenite are found in a quartz vein in granite. At Cooper, Maine, as described by G. O. Smith,[b] the molybdenite is found in pegmatite dikes and also in the adjacent granite. It may be either an original mineral or an impregnation; probably, says Smith, the latter. In Canada molybdenite occurs under a variety of conditions, often in granite, but also, according to J. W. Wells,[c] in veins cutting limestone, and associated with pyroxene, calcite, quartz, mica, pyrite, etc. The mineral was found embedded sometimes in pyroxene and sometimes in pyrrhotite, and Wells furthermore reports it in veins through pyroxenite. The nature and origin of these unusual associations remain to be determined. They probably represent contact metamorphism.

The ores of tungsten are by no means numerous. In addition to stolzite, which was mentioned among the ores of lead, there are the tungstate of iron, wolframite; the tungstate of manganese, hübnerite; calcium tungstate, scheelite; the copper salt, cuprotungstite; and an alteration product, tungstic ocher, WO_3. Of these, wolframite, hübnerite, and scheelite are economically important, and all three have been prepared artificially.

N. S. Manross[d] obtained scheelite by fusing sodium tungstate with calcium chloride. A. Cossa[e] also prepared it by fusing the amorphous compound, $CaWO_4$, with common salt. H. Debray[f] heated amorphous calcium tungstate with lime in a current of gaseous hydrochloric acid, and so effected its crystallization. He also heated a mixture of tungstic oxide and ferric oxide in the same gas, forming in that way both wolframite and magnetite. Some of the tungstic acid crystallized at the same time. A. Geuther and E. Forsberg[g] produced wolframite and its manganesian varieties by fusing sodium tungstate with ferrous chloride, or with the mixed chlorides of iron and manganese. L. Michel,[h] by fusing sodium tungstate and sodium chloride with the chlorides of calcium, manganese, iron, or lead, obtained scheelite, hübnerite, wolframite, and stolzite, respectively.

---

[a] Bull. Geol. Soc. America, vol. 15, p. 283, 1904.
[b] Bull. U. S. Geol. Survey No. 260, p. 197, 1905.
[c] Canadian Min. Rev., vol. 22, p. 113, 1903.
[d] Liebig's Annalen, vol. 81, p. 243, 1852.
[e] Cited by L. Bourgeois, Reproduction artificielle des minéraux, p. 172.
[f] Compt. Rend., vol. 55, p. 287, 1862.
[g] Liebig's Annalen, vol. 120, p. 270, 1861.
[h] Bull Soc. min., vol. 2, p. 142, 1879.

Wolframite is a frequent companion of tin ores, especially in greisen, the cassiterite and the tungsten minerals having developed in much the same way. In the Cornish tin mines wolframite is an annoying impurity, and it also occurs, according to J. D. Irving,[a] in the Etta tin district of the Black Hills. Near Lead City, in the same region, however, Irving found wolframite in magnesian limestone, where it had apparently been formed by metasomatic replacement. This occurrence was secondary, the primary wolframite being found in quartz veins cutting granite rocks. At Osceola, Nevada, hübnerite is abundant, with some scheelite, in veins of white quartz in a porphyritic granite.[b] The tungsten deposits of the Dragoon Mountains, Arizona, are of the same character,[c] the ore being principally hübnerite, with scheelite and some wolfram. The tungsten mine at Trumbull, Connecticut, where wolframite, scheelite, and tungstic ocher are found, has been described by A. Gurlt[d] and W. H. Hobbs.[e] In the Sierra de Cordoba, Argentina, according to G. Bodenbender,[f] the wolframite is again in quartz veins in granite, and molybdenite is sometimes present also. These illustrations of tungsten occurrences are ample for present purposes.

THE PLATINUM METALS.

The metals platinum, iridium, osmium, palladium, rhodium, and ruthenium form a well-defined natural group of elements, which are found associated with one another, and in less degree with iron, nickel, chromium, etc. With two exceptions the platinum metals occur native, or in alloys, which vary much in composition, and have received many specific names. The two exceptions are laurite, ruthenium sulphide, RuS_2; and sperrylite, platinum arsenide, $PtAs_2$. The native metals and recognized alloys are as follows:

Native platinum.
Native iridium, and platiniridium.
Native palladium, isometric.
Allopallodium, rhombohedral.
Iridosmine { Nevyanskite, over 40 per cent Ir.
Iridosmine { Siserskite, 30 per cent Ir, or less.
Palladium gold.[g]
Rhodium gold.[g]

---

[a] Trans. Am. Inst. Min. Eng., vol. 31, p. 683, 1901. See also J. D. Irving and S. F. Emmons, Prof. Paper U. S. Geol. Survey No. 26, p. 163, 1904.

[b] See F. B. Weeks, Twenty-first Ann. Rept. U. S. Geol. Survey, pt. 6, p. 319, 1901; and F. D. Smith, Eng. and Min. Jour., vol. 73, p. 304, 1902.

[c] See W. P. Blake, Trans. Am. Inst. Min. Eng., vol. 28, p. 543, 1898, and F. Rickard, Eng. and Min. Jour., vol. 78, p. 263, 1904.

[d] Trans. Am. Inst. Min. Eng., vol. 22, p. 236, 1893.

[e] Twenty-second Ann. Rept. U. S. Geol. Survey, pt. 2, p. 13, 1902.

[f] Zeitschr. prakt. Geol., 1894, p. 409. On the tungsten ores of Colorado, see W. Lindgren, Econ. Geol., vol. 2, p. 453, 1907.

[g] See section on gold, *ante*, pp. 554, 555.

The list might be extended by subdivision, but the increase in names would be meaningless. The following selected analyses fairly represent the great variations in native platinum:[a]

Analyses of native platinum.

A. From Choco, Colombia. Analysis by H. Sainte-Claire Deville and H. Debray, Ann. chim. phys., 3d ser., vol. 56, p. 449, 1859.

B. From California. Deville and Debray.

C. Nugget found near Plattsburg, New York, of 54 per cent chromite and 46 per cent metallic platinum. Analysis of the platinum by P. Collier, Am. Jour. Sci., 3d ser., vol. 21, p. 123, 1881.

D. From Nizhni Tagilsk, Urals, Deville and Debray.

E. From Nizhni Tagilsk, blackish magnetic grains. Analysis by J. von Muchin,[a] cited, with other analyses, by N. von Kokscharof, Materialien zur Mineralogie Russlands, vol. 5, p. 186, 1866.

F. Granite Creek, British Columbia. Nonmagnetic portion of sample. Analysis by G. C. Hoffmann, Trans. Roy. Soc. Canada, vol. 5, sec. 3, p. 17.

G. Magnetic portion of F. Analysis by Hoffmann.

H. From Condado, Minas Geraes, Brazil. Analysis by E. Hussak,[b] Zeitschr. prakt. Geol., 1906, p. 284.

	A.	B.	C.	D.	E.	F.	G.	H.
Pt	86.20	85.50	82.81	76.40	68.95	68.19	78.43	72.96
Ir	.85	1.05	.63	4.30	1.34	1.21	1.04	.88
Os	.....	.....	.....	.....	trace	.....	.....	undet.
Pd	.50	.60	3.10	1.40	.21	.26	.09	21.82
Rh	1.40	1.00	.29	.30	3.30	3.10	1.70	undet.
Au	1.00	.80	.....	.40	.....	.....	.....	.....
Cu	.60	1.40	.40	4.10	1.59	3.09	3.89	.....
Fe	7.80	6.75	11.04	11.70	18.93	7.87	9.78	trace
Iridosmine	.95	1.10	.....	.50	3.75	14.62	3.77	.....
Al_2O_3	.....	.....	1.95	.....	.....	.....	.....	.....
CaO	.....	.....	.07	.....	.....	.....	.....	.....
MgO	.....	.....	.03	.....	.....	.....	.....	.....
Insoluble	.....	.....	.....	.....	.....	.....	.....	.42
Sand	.95	2.95	.....	1.40	.....	.....	.....	.....
Chromite	.....	.....	.....	.....	.....	1.95	1.27	.....
	100.25	101.15	100.32	100.50	98.07	100.29	99.97	96.08

[a] Commonly but erroneously quoted as Minchin.

[b] For a paper by Hussak on platinum and palladium in Brazil, see Sitzungsb. Akad. Wien, vol. 113, Abth. 1, p. 379, 1904.

In another sample of Uralian plantinum, A. Terreil[b] found 0.75 per cent of nickel. A remarkable nugget from the river Approuague, French Guiana, gave A. Damour[c] 41.96 Pt, 18.18 Au, 18.39 Ag, and 20.56 per cent Cu. This sample is altogether exceptional.

The subjoined analyses are of native iridium, platiniridium, and iridosmine:

Analyses of native iridium, etc.

A. Native iridium, Nizhni Tagilsk, Urals.

B. Platiniridium, probably from Brazil. Analyses A and B by Svanberg, Berzelius's Jahresbericht, vol. 15, p. 205, 1834.

C. Iridosmine from Colombia.

[a] See J. F. Kemp, Bull. U. S. Geol. Survey No. 193, 1902, for a full collection of analyses, both of platinum and iridosmine. Other analyses by W. J. Martin, jr., appear in Sixteenth Ann. Rept. U. S. Geol. Survey, pt. 3, p. 633, 1895. See also Dana's System of Mineralogy, 6th ed., pp. 26, 27.

[b] Compt. Rend., vol. 82, p. 1116, 1876.

[c] *Idem*, vol. 52, p. 688, 1861.

D. Iridosmine from the Urals.

E. Iridosmine from the Urals. Analyses C, D, and E by Deville and Debray, Ann. chim. phys., 3d ser., vol. 56, pp. 481, 482, 1859.

	A.	B.	C.	D.	E.
Ir	76.80	27.79	70.40	77.20	43.94
Pt	19.64	55.44	.10	1.10	.14
Os	.....	trace	17.20	21.00	48.85
Pd	.89	.49	.....	.....	.....
Rh	.....	6.86	12.30	.50	1.65
Ru	.....	.....	none	.20	4.68
Cu	1.78	3.30	.....	trace	.11
Fe	.....	4.14	.....	.....	.63
	99.11	98.02	100.00	100.00	100.00

The indefinite character of these natural alloys seems to be perfectly evident.

The platinum and iridosmine of commerce are almost entirely from detrital or placer deposits, but their primary geological affinities are subsilicic. That is, the ores are associated with chromite and other products of the decomposition of peridotic rocks, from which they were undoubtedly derived. Chromite has been repeatedly observed adherent to or interpenetrating platinum nuggets, and A. Inostranzeff [a] has reported platinum in place in the dunite, or rather serpentine, of Mount Solovief in the Urals. On the Tulameen River, British Columbia, according to J. F. Kemp,[b] the mother rock is also dunite, and grains of platinum are found with both chromite and olivine adhering to them. Even the serpentine of this region yields traces of platinum upon careful assay. The black sands of the Pacific coast, from British Columbia southward to California, contain platinum, and also iridosmine, and their origin is peridotic.[c]

A. Daubrée,[d] many years ago, commenting upon the constant association of platinum with olivine rocks and chromite, pointed out the similarity of these rocks to meteorites. Much later, J. M. Davison [e] actually discovered platinum and iridium in the meteoric iron of Coahuila. Still more recently, S. Meunier [f] has discussed this relationship at some length, and argued that, contrary to the usual view, the native platinum and iron of these rocks are not magmatic, but introduced as vaporized chlorides and subsequently reduced by heated

[a] See English translation from the Russian in U. S. Geol. Survey Bull. No. 193, p. 76, 1902.

[b] Bull. U. S. Geol. Survey No. 193, 1902. A brief monograph on the geological relations and distribution of platinum.

[c] See D. T. Day, Nineteenth Ann. Rept. U. S. Geol. Survey, pt. 6, p. 265, 1899. Also Day and R. H. Richards, Bull. U. S. Geol. Survey No. 285, p. 150, 1906. In Trans. Am. Inst. Min. Eng., vol. 30, p. 702, 1900, Day has a memoir on platinum in North America.

[d] Compt. Rend., vol. 80, p. 707, 1875.

[e] Am. Jour. Sci., 4th ser., vol. 7, p. 4, 1899.

[f] Compt. Rend. VII Cong. géol. internat., 1897, p. 157. Other recent papers on Uralian platinum are by A. Saytzeff, Zeitschr. prakt. Geol., 1898, p. 395; C. W. Purington, Trans. Am. Inst. Min. Eng., vol. 29, p. 3, 1899; and R. Spring, Zeitschr. prakt. Geol., 1905, p. 49. L. Duparc (Arch. sci. phys. nat., 4th ser., vol. 15, pp. 287, 377, 1903) also describes the Uralian occurrences, and gives a bibliography of them.

hydrogen. This mode of introduction and deposition Meunier reproduced artificially, but the application of the experiments to meteorites is not quite clear.

In a number of cases platinum has been detected in sedimentary or metamorphic rocks. Kemp[a] mentions its occurrence in certain Pennsylvanian shales, and states also that the palladium gold of Brazil is sometimes associated with itabirite. E. Hussak[b] found palladium gold in a contact limestone, and reports the platinum of Brazil not only from olivine rocks, but also from a conglomeritic quartzite. According to J. B. Jaquet,[c] platinum occurs near Broken Hill, Australia, in ironstone, ferruginous claystone, and decomposed gneiss. It is also said to be present in the ash of certain Australian coals.[d] F. Sandberger[e] identified platinum in limonite nodules from Mexico. In an altered limestone lens in Sumatra, L. Hundeshagen[f] found platinum up to 6 grams per metric ton. The metal was in wollastonite, which formed from 85 to 88 per cent of the rock, with 12 to 14 per cent of grossularite. Hundeshagen regards this occurrence as due to the introduction of hot solutions containing gold, silver, and platinum into the metal-bearing rock. Natural solutions of platinum, however, do not appear to have been observed; and its solubility in natural solvents is undetermined. Possibly the platiniferous quartz from the south island of New Zealand, recently described by J. B. Bell,[g] had a similar origin. The quartz veins, however, were near altered magnesian eruptives, in which no platinum was found.

The occasional presence of platinum in sulphide ores has long been known, although it has attracted serious attention only within recent years. E. Gueymard[h] found it in chalcocite, in a gangue of dolomite, quartz, and barite, at Chapeau Mountain, in the French Alps. The country rock was a metamorphic limestone. H. Rössler[i] detected both platinum and palladium in silver bullion; and H. Vogel[j] reports its presence in the metallic ores of Boitza, Transylvania. Much more striking, however, is the presence of platinum in the sulphide ores of Sudbury, Canada. Here it is found as the arsenide, sperrylite,[k]

---

[a] Bull. U. S. Geol. Survey No. 193, 1902.

[b] Zeitschr. Kryst. Min., vol. 42, p. 399, 1906.

[c] Rec. Geol. Survey, New South Wales, vol. 5, p. 33, 1896–1898. See also J. C. H. Mingaye, Ann. Rept. Dept. Mines, New South Wales, 1889, p. 249.

[d] See Seventeenth Ann. Rept. U. S. Geol. Survey, pt. 3, p. 282, 1896.

[e] Neues Jahrb., 1875, p. 625.

[f] Trans. Inst. Min. Met., vol. 13, p. 550, 1903–4.

[g] Econ. Geol., vol. 1, p. 749, 1906.

[h] Compt. Rend., vol. 29, p. 814, 1849.

[i] Liebig's Annalen, vol. 180, p. 240, 1875.

[j] Oesterr. Zeitschr. Berg. u. Hüttenw., vol. 39, p. 32.

[k] See H. L. Wells, Am. Jour. Sci., 3d ser., vol. 37, p. 67, 1889. Sperrylite has since been found by W. E. Hidden (idem, 4th ser., vol. 6, p. 381, 1898), and by Hidden and J. H. Pratt (idem, vol. 6, p. 467, 1898), at two localities in North Carolina, associated with rhodolite garnet. For details concerning Sudbury, see the section on nickel and cobalt, *ante*, p. 600.

associated with nickeliferous pyrrhotite and chalcopyrite, but most intimately with the latter. F. W. Clarke and C. Catlett,[a] however, showed its presence in massive polydymite. At the Rambler mine, in Wyoming, both platinum and palladium are found in covellite, in ores derived from diorite.[b] Here, also, sperrylite has been identified.[c] At this locality palladium appears to be more abundant than platinum, but its mode of combination is as yet undetermined. Sperrylite has furthermore been found by J. Catharinet[d] in the pegmatite of Copper Mountain, British Columbia. One small crystal was embedded in biotite. Platinum is also present, according to C. W. Dickson,[e] in chalcopyrite from the Key West mine, Bunkerville, Nevada; but sperrylite could not be detected. J. H. L. Vogt[f] found platinum to be present in the nickeliferous pyrrhotites of Norway, and R. W. Brock[g] discovered traces of it in sulphide-bearing quartz at the Mother Lode claim, Yale district, British Columbia. These occurrences have led to much searching after platinum in copper and nickel ores, and the search is likely to be occasionally fruitful.[h]

VANADIUM AND URANIUM.

Although vanadium and uranium are chemically unlike, they occur together in one of their important ores, and are therefore considered together in this section. Vanadium is a member of the phosphorus group of elements; uranium is more akin to molybdenum and tungsten, and the two metals are also magmatically opposed. Vanadium is most common in ferromagnesian rocks, while uranium minerals occur more frequently in granites and pegmatites.

Vanadium is reckoned among the rarer elements, and yet it is widely diffused. Traces of it are common in iron ores, especially in the titaniferous magnetites, and it is found, when sought for, in rocks of nearly every class.[i] W. F. Hillebrand,[j] in a special investigation, examined 57 igneous rocks, and found vanadium, in most cases, in weighable proportions. The smallest traces were in persilicic rocks,

---

[a] Bull. U. S. Geol. Survey No. 64, p. 20, 1890.

[b] See W. C. Knight, Eng. and Min. Jour., vol. 72, p. 845, 1901; vol. 73, p. 696, 1902; J. F. Kemp, Cont. Geol. Dept. Columbia Univ., vol. 11, No. 93, 1903; S. F. Emmons, Bull. U. S. Geol. Survey No. 213, p. 94, 1903; and T. T. Read, Eng. and Min. Jour., vol. 79, p. 985, 1905.

[c] H. L. Wells and S. L. Penfield, Am. Jour. Sci., 4th ser., vol. 13, p. 95, 1902.

[d] Eng. and Min. Jour., vol. 79, p. 127, 1905.

[e] Jour. Canadian Min. Inst., vol. 8, p. 192, 1905. Memoir on the distribution of the platinum metals in other sources than placers.

[f] Zeitschr. prakt. Geol., 1902, p. 258.

[g] Eng. and Min. Jour., vol. 77, p. 280, 1904.

[h] According to W. Baragwanath (Bull. No. 20, Geol. Survey Victoria, 1906), platinum is found in the Thomson River copper mine in a hornblende rock rich in chalcopyrite.

[i] See A. A. Hayes, Proc. Am. Acad., vol. 10, p. 294, 1875. Hayes found vanadium in many rocks, and also in the waters of Brookline, Massachusetts. For determinations of vanadium in lavas of Vesuvius and Etna, see L. Ricciardi, Gazz. chim. ital., vol. 13, p. 259, 1883. Scattered determinations are numerous.

[j] Bull. U. S. Geol. Survey No. 167, p. 49, 1900. See also J. H. L. Vogt, Zeitschr. prakt. Geol., 1899, p. 274, on the distribution of vanadium in rocks.

but in subsilicic varieties the amount, reckoned as V_2O_3, frequently ran as high as 0.03 to 0.05 per cent. In the ferromagnesian minerals, separated from some of the rocks, the proportion of vanadium was even higher, in one biotite, for example, reaching 0.127 per cent of V_2O_3. Hillebrand also found vanadium in slates, and in other sedimentary rocks. A composite of 253 sandstones gave 0.003, and another of 498 limestones gave 0.004 per cent of vanadious-oxide.

H. Sainte-Claire Deville [a] found vanadium in French bauxite, in cryolite, and in rutile. P. Beauvallet [b] detected it in a French clay. In bricks made from a clay found near Sydney, Australia, according to E. H. Rennie,[c] vanadium is present to a perceptible amount. Other Australian clays and shales gave J. C. H. Mingaye [d] similar results. He also found vanadium in the ash of coals and in the oil-bearing shales of Scotland. E. Bechi [e] reports vanadium in clays, schists, and the ashes of plants,[f] and C. Baskerville [g] found it in the ashes of peat from North Carolina. A. Jorissen [h] discovered it in delvauxite, which is a hydrous phosphate of iron.

A still more remarkable occurrence of vanadium was noted by J. J. Kyle [i] in a lignite from San Rafael, Province of Mendoza, Argentina. The coal yielded only 0.63 per cent of ash, but the latter, upon analysis, was found to contain 38.22 per cent of V_2O_5, together with silicates and sulphates of other metals. In a similar coal, probably from the same region, A. Mourlot [j] obtained 38.5 per cent of V_2O_5 from the ash; and in another, from Yauli, Peru, Torrico y Meca [k] discovered 38 per cent. These ash analyses, taken together with the finding of vanadium in the ashes of wood and peat, suggest that plants have played some part in the concentration of vanadium. Other evidence of similar purport will be cited later.

The definite minerals, containing vanadium as an essential constituent, are not very numerous. Some of them, vanadates of lead, such as vanadinite and descloizite, were mentioned in a previous section of this chapter. Volborthite and calciovolborthite are vanadates of copper, with other bases, and pucherite is a vanadate of bismuth. Mottramite, a vanadate of copper and lead, found at Alderley Edge, in England, has had some significance as a workable ore. It

[a] Ann. chim. phys., 3d ser., vol. 61, pp. 309, 342, 1861. See also L. Dieulafait, Compt. Rend., vol. 93, p. 804, 1881.

[b] Compt. Rend., vol. 49, p. 301, 1859.

[c] Proc. Roy. Soc. New South Wales, vol. 17, p. 133, 1883. He cites similar examples from other authorities.

[d] Rec. Geol. Survey New South Wales, vol. 7, p. 219, 1903.

[e] Atti Accad. Lincei, 3d ser., vol. 3, p. 403, 1879.

[f] See also E. Demarçay, Compt. Rend., vol. 130, p. 91, 1900.

[g] Jour. Am. Chem. Soc., vol. 21, p. 706, 1899.

[h] Ann. Soc. géol. Belg., vol. 6, p. 41, 1878–9.

[i] Chem. News, vol. 66, p. 211, 1892.

[j] Compt. Rend., vol. 117, p. 546, 1893.

[k] Abstract from a Peruvian original, in Jour. Chem. Soc., vol. 70, pt. 2, p. 252, 1896.

occurs as an impregnation in Keuper sandstone.[a] A Mexican variety of descloizite, ramirite,[b] has also been commercially exploited. These vanadates, with the exception of mottramite, occur principally in metalliferous veins; and A. Ditte[c] attributes their formation to percolating vanadiferous waters acting on other compounds, most commonly the compounds of lead.

A sulphovanadate of copper, sulvanite, Cu_3VS_4, is found in South Australia.[d] At Minasragra, near Cerro de Pasco, Peru, another sulphide of vanadium is found, associated with pyrite, in a carbonaceous substance resembling a coal but abnormally rich in sulphur.[e] This occurrence may well be correlated with the other discoveries of vanadium in the ash of coal; and the sulphates, equivalent to 13.70 per cent of SO_3, found by Kyle in his analysis, may show that he too had originally a sulphide to deal with which was oxidized during combustion.

The rare mineral ardennite is a vanadio-silicate of manganese and aluminum. Roscoelite appears to be essentially a muscovite, in which vanadium has partly replaced aluminum.[f] It contains about 24 per cent of V_2O_3. In a green sandstone from Placerville, Colorado, W. F. Hillebrand[g] found 3.50 per cent of V_2O_3, which was present in a replacement of the original calcareous cement. The green mineral, isolated, contained 12.84 per cent of V_2O_3 and was apparently a variety of roscoelite, or else a closely related compound.

The metal uranium is much less abundantly diffused than vanadium. It is found in a number of rare minerals—phosphates, arsenates, sulphates, carbonates, and silicates, which are all of secondary origin. Autunite, a phosphate of uranium and lime, is not uncommon in the form of yellow scales on granite or gneiss, but the other species are much less frequently seen. A number of other minerals, samarskite, euxenite, etc., are columbates or tantalates containing uranium, and these are primary constituents of pegmatite.

The only uranium ores of any importance are uraninite or pitchblende and carnotite. Uraninite is found crystallized in pegmatites, and also massive in metalliferous veins, as at Joachimsthal,[h]

---

[a] See H. E. Roscoe, Proc. Roy. Soc., vol. 25, p. 111, 1876.

[b] See G. de J. Caballero, Mem. Soc. cient. Ant. Alzate, vol. 20, p. 87, 1903.

[c] Compt. Rend., vol. 138, p. 1303, 1904.

[d] See G. A. Goyder, Jour. Chem. Soc., vol. 77, p. 1094, 1900.

[e] See F. Hewett, Eng. and Min. Jour., vol. 82, p. 385, 1906; and J. J. Bravo, Inform. y Mem. Bol. Soc. ingen. minas, Lima, 1906, vol. 8, p. 171. For a later and much more complete description of the sulphide, patronite, and its associated minerals, see W. F. Hillebrand, Am. Jour. Sci., 4th ser., vol. 24, p. 141, 1907.

[f] Bull. U. S. Geol. Survey No. 167, p. 73, 1900.

[g] Bull. U. S. Geol. Survey No. 262, p. 18, 1905.

[h] On the Joachimsthal ores, see Janda, Oesterr. Zeitschr. Berg. u. Hüttenw., vol. 50, p. 283; also J. Stěp and F. Becke, Zeitschr. prakt. Geol., 1905, p. 148. R. Pearce (Proc. Colorado Sci. Soc., vol. 5, p. 156, 1895) has described the occurrence of uraninite in a mine near Central City, Colorado. On uranium ores in German East Africa, see W. Marckwald, Centralbl. Min. Geol. Pal., 1906, p. 761.

in Bohemia, and Johanngeorgenstadt, Saxony. It varies much in composition, so much so that different modifications of it have received different names, such as cleveite, nivenite, bröggerite, etc. The following analyses, by W. F. Hillebrand,[a] will serve to illustrate the variations:

Analyses of uraninite.

A. Hale's quarry, Glastonbury, Connecticut.
B. Near Central City or Blackhawk, Colorado.
C. Johanngeorgenstadt, Saxony.
D. Nivenite, Llano County, Texas.
E. Bröggerite, Anneröd, Norway.
F. Cleveite, Arendal, Norway.

	A.	B.	C.	D.	E.	F.
UO_3	26.48	25.26	22.33	20.89	30.63	41.71
UO_2	57.43	58.51	59.30	44.17	45.13	24.18
ThO_2	9.79	.....	none	6.69	6.00	
CeO_2	.25	.22	none	.34	.18	3.66
ZrO_2	.....	7.59	none	.34	.06	
$(La, Di)_2O_3$	.13	.....	none	2.36	.27	
$(Y, Er)_2O_3$	.20	.....	none	9.46	1.11	9.76
Al_2O_3	.....	.....	.20	.....	.....	.....
Fe_2O_3	.40	.....	.21	.14	.25	.03
FeO	.....	.32	.....	.....	.....	.....
PbO	3.26	.70	6.39	10.08	9.04	10.54
ZnO	.....	.44	.....	.....	.....	.....
CuO	.....	.....	.17	.....	.....	.....
MnO	trace	.16	.09	.....	.....	.....
CaO	.08	.84	1.00	.32	.37	1.06
MgO	.....	trace?	.17	.....	trace	.10
Bi_2O_3	.....	.....	.75	.....	.....	.....
V_2O_5, MoO_3, WO_3	.....	.....	.75	.....	.....	.....
Alkalies	trace	trace?	.31	.....	traces	.23
SO_3	.....	.....	.19	.....	.....	.....
P_2O_5	.....	.22	.06	.....	.02	.....
As_2O_5	.....	.43	2.34	.....	.....	.....
He	undet.	.02	trace	.08	.17	undet.
H_2O	.61	1.96	3.17	1.48	.74	1.23
SiO_2	.16	2.79	.50	.46	.22	.90
$CuFeS_2$	.....	.12	.....	.....	.....	.....
FeS_2	.....	.24	.....	.....	.....	.....
Insoluble	.70	.....	.....	1.47	4.42	1.10
	99.49	99.82	97.93	98.28	99.61	94.50

From these analyses no single definite formula can be deduced. The uranium, it is clearly seen, exercises a double function, acid and basic, the latter being represented by the radicle uranyl, UO_2. With this base other bases are variably present—thoria, zirconia, the rare earths, and oxide of lead, sometimes one and sometimes another predominating. There are also impurities of several kinds which can not be clearly distinguished from essential constituents, and some of the variations may be due to incipient alterations. For example, the varying ratios between UO_2 and UO_3 may be ascribed to oxidation, the increase in UO_3 marking stages in the process of transformation of uraninite into gummite, a well-known alteration product of pitchblende. In gummite, which is a hydrous oxide of uranium[b] plus other bases, with from 61 to 75 per cent of UO_3, the final transformation of uraninite is seen.

[a] See Bull. U. S. Geol. Survey No. 78, p. 43, 1891, and No. 90, p. 23, 1892, for details; also Bull. No. 220, pp. 111–114, 1903. 22 analyses in all are given.

[b] For analyses of gummite, see H. von Foullon, Neues Jahrb., 1885, pt. 1, Ref., p. 21, and F. A. Genth, Am. Chem. Jour., vol. 1, p. 89, 1879.

From a physical point of view uraninite is an extraordinary mineral. In it helium was first discovered, and later the radioactive elements polonium and radium. Uranium and its compounds are themselves radioactive, but radium is vastly more so; and the latter, while distinctly an element so far as its chemical characteristics are concerned, undergoes disintegration, yielding a series of emanations which seems to end in the production of helium. Radioactivity, then, appears to be a phenomenon of atomic decay; but the subject is one which hardly falls within the scope of this treatise. For the present it is enough to say that the chief source of radium to-day is in the uraninite of Joachimsthal, and that uranium itself may be the progenitor of its more highly active companion.

Carnotite, which is essentially a vanadate of uranium and potassium, but with other bases present also, was first described by C. Friedel and E. Cumenge.[a] It is found as a canary-yellow impregnation in sandstone in western Colorado and eastern Utah. The former field has been studied by W. F. Hillebrand and F. L. Ransome,[b] the latter by J. M. Boutwell.[c] An outlying region for carnotite in Rio Blanco County, Colorado, has recently been described by H. S. Gale.[d]

The following analyses of carnotite, by Hillebrand, will show its general character:

Analyses of carnotite.

A. Copper Prince claim, Roc Creek, Montrose County, Colorado.
B. Yellow Boy claim, La Sal Creek, Montrose County.

	A.	B.
UO_3	54.89	54.00
V_2O_5	18.49	18.05
P_2O_5	.80	.05
As_2O_5	trace	none
Al_2O_3	.09	.29
Fe_2O_3	.21	.42
CaO	3.34	1.86
SrO	.02	trace
BaO	.90	2.83
MgO	.22	.14
K_2O	6.52	5.46
Na_2O	.14	.13
Li_2O	trace	trace
H_2O-	2.43	3.16
H_2O+	2.11	2.21
PbO	.13	.07
CuO	.15	trace
MoO_3	.18	.05
SiO_2	.15	.20
TiO_2	.03	(?)
CO_2	.56	none
Insoluble	7.10	10.33
	98.46	99.25

[a] Compt. Rend., vol. 128, p. 532, 1899.
[b] Bull. U. S. Geol. Survey No. 262, p. 9, 1905.
[c] Bull. U. S. Geol. Survey No. 260, p. 200, 1904.
[d] Bull. U. S. Geol. Survey No. 315, p. 110, 1907.

With the carnotite a vanadiferous silicate also occurs, which may be akin to roscoelite.[a] The origin of these Colorado ores is not known.

In the Utah field, as described by Boutwell, not only carnotite, but other vanadates, such as calciovolborthite are found. In Wildhorse Canyon a black, carbonaceous sandstone also occurs, in which vanadium is present. This recalls the occurrences of vanadium in coals elsewhere. In the San Rafael Swell the carnotite is found principally on or near the fossil remains of plants, whose organic matter, Boutwell suggests, may have acted as precipitants of vanadium. The same association with fossil wood was also noted by Gale. No sulphide of vanadium, however, like that of Peru, has yet been identified in this region. The genesis of these strange ores is yet to be discovered. Carnotite has also been reported by D. Mawson [b] in the pegmatite of "Radium Hill," South Australia.

Uranium, like vanadium, has been found in coal. In an anthracitic bitumen from Sweden, described by A. E. Nordenskiöld,[c] the ash contained about 3 per cent of U_3O_8, with some nickel oxide and rare earths. In the ash of Swedish "kolm," a bituminous coal, H. Liebert, working in C. Winkler's laboratory, found from 1.68 to 2.87 per cent of U_3O_8.[d] An anthracitic mineral from a pegmatite vein in the Saguenay district, Canada, yielded J. Obalski [e] 2.56 per cent of uranium, equivalent to 35.43 per cent in the ash. The significance of these occurrences remains to be determined.

COLUMBIUM, TANTALUM, AND THE RARE EARTHS.

A striking feature in the recent development of chemical industries has been the utilization of rare elements which previously had only scientific interest. The invention of incandescent gas lighting has created a demand for several of these substances, and that reason alone is enough to justify their brief consideration here.

Columbium [f] and tantalum are acid-forming elements, whose typical oxides have the formulæ Cb_2O_5 and Ta_2O_5. They enter into the composition of a considerable number of minerals, which are found principally in pegmatites. Among these, columbite, tantalite, samarskite, and euxenite are by far the most important. Columbite and tantalite are salts of iron, $FeCb_2O_6$ and $FeTa_2O_6$, which commonly occur more or less isomorphously commingled, often with manganese partly replacing the iron. Metallic tantalum has recently been utilized as a substitute for the carbon filament in incandescent

[a] According to A. H. Phillips (Proc. Am. Phil. Soc., vol. 43, p. 157, 1904), the Utah carnotite contains radium.

[b] Trans. Roy. Soc. South Australia, vol. 30, p. 188, 1906.

[c] Compt. Rend., vol. 116, p. 677, 1893.

[d] See C. Winkler, Zeitschr. Kryst. Min., vol. 37, p. 287, 1903.

[e] Jour. Canadian Min. Inst., vol. 7, p. 245, 1904.

[f] Known in Germany as niobium. The name columbium has about forty years' priority, and refers to the original discovery of the ore in America. Niobium is etymologically meaningless.

electric lights, and tantalite is the chief source from which it can be obtained.[a] The supply so far is mainly from Scandinavian localities.

Zirconium and thorium are tetrad metals forming oxides of the type RO_2. They also are found in granite rocks, and zirconium compounds are almost always present in nepheline syenites. The chief zirconium mineral, zircon, $ZrSiO_4$, has already been described in the chapter upon rock-forming minerals. The mineral baddeleyite, found in Ceylon and Brazil, is the oxide, ZrO_2. Eudialyte, catapleiite, and the zircon-pyroxenes are complex silicates containing zirconia. Zircon syenite and eudialyte syenite are rare, but well-known rocks, and zircon also occurs, though not commonly, in contact limestones. The most remarkable American locality for zircon is near Green River, in Henderson County, North Carolina, where it is found abundantly in a decomposed pegmatite dike. From this source many tons of zircon have been obtained.

The typical thorium mineral is also a silicate, thorite, $ThSiO_4$. The ideal species, however, has not been found, for the actual specimens are always more or less altered. The chief source of thoria, which is used in the manufacture of mantles for incandescent gas-burners, is from monazite sand, in which the thorium compounds exist as variable impurities. Thorianite, a thorium-uranium oxide from Ceylon, is noteworthy for being richer in helium than any other known mineral. Like uranium, thorium is strongly radioactive, and so are its compounds.[b]

In the group of elements known as the metals of the rare earths, the following members have been identified: Scandium, yttrium, lanthanum, cerium, praseodymium, neodymium, samarium, europium, gadolinium, terbium, dysprosium, erbium, thulium, holmium, and ytterbium. Among these, yttrium and cerium may be regarded as the type elements, and they are, moreover, the most important. In the mineral kingdom these substances occur in a large number of compounds—fluorides, carbonates, silicates, phosphates, columbates, and tantalates, minerals which are found, like the other species mentioned in this section, principally in granites, gneisses, and pegmatites.

Cerium, which is always accompanied by lanthanum, neodymium, and praseodymium, is obtainable principally from three minerals which are found in reasonably large quantities. Cerite, a hydrous silicate of these elements, forms a bed in gneiss at Bastnäs, Sweden. It was for a long time the only commercial source of cerium compounds. Allanite, a more complex silicate of cerium, aluminum, and other bases, is also abundant enough to be an available ore. It is

[a] See Werner von Bolton, Zeitschr. angew. Chemie, 1906, p. 1537.

[b] According to C. Baskerville (Jour. Am. Chem. Soc., vol. 26, p. 922, 1904), the thorium previously described is a mixture of three elements, thorium, berzelium, and carolinium. His results, however, have been doubted, and the question is not yet finally settled. For an elaborate paper on the occurrence of thorium in the mineral kingdom, see J. Schilling, Zeitschr. angew. Chemie, 1902, p. 869.

not a very rare mineral, and a notable locality for it is on Little Friar Mountain, Amherst County, Virginia.[a] Allanite has also been found associated with iron ores, as, for example, with the magnetite of Moriah, near Lake Champlain.

Monazite, the phosphate of cerium, which is normally $CePO_4$, is, however, the chief source of the cerium earths at the present day. It is obtained for commercial purposes from detrital deposits of monazite sand,[b] and yields both cerium and thorium compounds. Monazite, the allied yttrium phosphate, xenotime, and allanite have all been adequately considered in the chapter upon rock-forming minerals. The following analyses of monazite are by S. L. Penfield:[c]

Analyses of monazite.

A. From Portland, Connecticut. B. From the sands of Brindletown, North Carolina. C. From Amelia Court House, Virginia.

	A.	B.	C.
P_2O_5	28.18	29.28	26.12
Ce_2O_3	38.54	31.38	29.89
$(La, Di)_2O_3$	28.33	30.88	26.66
ThO_2	8.25	6.49	14.23
SiO_2	1.67	1.40	2.85
Ignition	.37	.20	.67
	100.34	99.63	100.42

Yttria and its companions, erbia, terbia, ytterbia, etc., are obtained for the most part from gadolinite, $Gl_2FeY_2Si_2O_{10}$. These oxides, therefore, are sometimes called the "gadolinite earths." The type locality for this species is Ytterby, in Sweden, and other Swedish localities have yielded the mineral. A more remarkable occurrence of gadolinite and other allied minerals is at Barringer Hill, Llano County, Texas. Here, in a giant pegmatite, containing enormous crystals of quartz and feldspar, gadolinite is found in large crystals, together with yttrialite, thorogummite, nivenite, fergusonite, allanite, tengerite, cyrtolite, rowlandite, mackintoshite, and yttrocrasite. Several of these species and varieties are peculiar to this locality.[d] According to Hidden, most of these minerals are radioactive, and both he and his assistant, working in the deposit, were annoyed by an irritation of the skin like that produced by the radium emanations or the X rays.

[a] See J. W. Mallet, Am. Jour. Sci., 3d ser., vol. 14, p. 397, 1877.

[b] On the monazite sand of North Carolina, see H. B. C. Nitze, Bull. No. 9, North Carolina Geol. Survey, 1898. Also the references on p. 293, *ante*. Nitze cites 37 analyses of monazite. On monazite sand in the tin-bearing alluvium of the Malay Peninsula, see Bull. Imp. Inst., vol. 4, p. 301, 1906.

[c] Am. Jour. Sci., 3d ser., vol. 24, p. 250, 1882. The symbol Di represents the old didymium, which is now known to be a mixture of neodymium, praseodymium, samarium, etc.

[d] See W. E. Hidden and J. B. Mackintosh, Am. Jour. Sci., 3d ser., vol. 38, p. 474, 1889; Hidden, idem, vol. 42, p. 430, 1891; Hidden and W. F. Hillebrand, idem, vol. 46, pp. 98, 208, 1893; Hillebrand, idem, 4th ser., vol. 13, p. 145, 1902; Hidden, idem, vol. 19, p. 425, 1905; Hidden and C. H. Warren, idem, vol. 22, p. 515, 1906.

CHAPTER XVI.

THE NATURAL HYDROCARBONS.

COMPOSITION.

Natural gas, petroleum, bitumen, and asphaltum are all essentially compounds of carbon and hydrogen, or, more precisely, mixtures of such compounds in bewildering variety. They contain, moreover, many impurities—sulphur compounds, oxidized and nitrogenous substances, etc.—whose exact nature is not always clearly defined. The proximate analysis of a petroleum or bitumen consists in separating its components from one another, and in their identification as compounds of definite constitution.

All of the hydrocarbons fall primarily into a number of regular series, to each of which a generalized formula may be assigned, in accordance with the following scheme:

1. C_nH_{2n+2}.	6. C_nH_{2n-8}.
2. C_nH_{2n}.	7. C_nH_{2n-10}.
3. C_nH_{2n-2}.	8. C_nH_{2n-12}.
4. C_nH_{2n-4}.	— ———.
5. C_nH_{2n-6}.	18. C_nH_{2n-32}.

Members of the first eight series have been discovered in petroleum.

These expressions, however, have only a preliminary value, although they are often used in the classification of petroleums. Each one represents a group of series—homologous, isomeric, or polymeric, as the case may be—and for precise work these must be taken separately. The first formula, for example, represents what are known as the paraffin hydrocarbons, which begin with marsh gas or methane, CH_4, and range at least as high as the compound $C_{35}H_{72}$. Even these are again subdivided into a number of isomeric series—the primary, secondary, and tertiary paraffins—which, with equal percentage composition, differ in physical properties by virtue of differences of atomic arrangement within the molecules. Each member of the series differs from the preceding member by the addition of the group CH_2, and also by the physical characteristics of greater condensation. Methane, CH_4, for example, is gaseous; the middle members of the series are liquids, with regularly increasing boiling points; the higher members are solids, like ordinary paraffin. These hydrocarbons are especially characteristic of the Pennsylvania petro-

leums, from which the following members of the series have been separated:[a]

Paraffins from Pennsylvania petroleum.

Name.	Formula.	Melting point.	Boiling point.
		°C.	°C.
1. Gaseous:			
Methane	CH_4	−186	−164
Ethane	C_2H_6	−172.1	− 84.1
Propane	C_3H_8		− 37
Butane	C_4H_{10}		+ 1
2. Liquid:			
Pentane	C_5H_{12}		37
Hexane	C_6H_{14}		69
Heptane	C_7H_{16}		98
Octane	C_8H_{18}		125
Nonane	C_9H_{20}	− 51	150
Decane	$C_{10}H_{22}$	− 31	173
Endecane	$C_{11}H_{24}$	− 26	195
Dodecane	$C_{12}H_{26}$	− 12	214
Tridecane	$C_{13}H_{28}$		
Tetradecane	$C_{14}H_{30}$	+ 4	252
Pentadecane	$C_{15}H_{32}$		
Hexadecane	$C_{16}H_{34}$	18	
3. Solid:			
Octodecane	$C_{18}H_{38}$		
Eicosane	$C_{20}H_{42}$	37	
Tricosane	$C_{23}H_{48}$	48	
Tetracosane	$C_{24}H_{50}$	50–51	
Pentacosane	$C_{25}H_{52}$	53–54	
Hexacosane	$C_{26}H_{54}$	55–56	
Octocosane	$C_{28}H_{58}$	60	
Nonocosane	$C_{29}H_{60}$	62–63	
Hentriacontane	$C_{31}H_{64}$	66	
Dotriacontane	$C_{32}H_{66}$	67–68	
Tetratriacontane	$C_{34}H_{70}$	71–72	
Pentatriacontane[a]	$C_{35}H_{72}$	76	

[a] For a description of these higher, solid paraffins, see C. F. Mabery, Am. Chem. Jour., vol. 33, p. 251, 1905. The literature of these substances is so voluminous that I can not attempt to give exhaustive references. C. Hell and C. Hägele (Ber Deutsch. chem. Gesell., vol. 22, p. 504, 1889) have described an artificial hydrocarbon, $C_{60}H_{122}$.

To this list the isomeric secondary paraffins isobutane, isopentane, isohexane, isoheptane, and isooctane must be added, and even then the list is probably not complete. For instance, the solid paraffins $C_{27}H_{56}$ and $C_{30}H_{62}$ have been found in petroleum.

Natural gas consists almost entirely of paraffins, mainly of methane, with quite subordinate impurities. In six samples from West Virginia, analyzed by C. D. Howard,[b] the total paraffins varied between 94.13 and 95.73 per cent. Methane ran from 79.95 to 86.48 per cent and ethane from 7.65 to 15.09. The following analyses from other sources may be cited more in detail:[c]

Analyses of natural gas.

A. From Creighton, Pennsylvania.
B. From Pittsburg, Pennsylvania.
C. From Baden, Pennsylvania.
D. From Vancouver, British Columbia. Analyses A to D by F. C. Phillips, Am. Chem. Jour., vol. 16, p. 406, 1894. Selected from a table of seventeen analyses to show extreme variations.

[a] The table is condensed from H. Höfer's valuable work, Das Erdöl, 2d ed., pp. 58–59, Braunschweig, 1906.

[b] West Virginia Geol. Survey, vol. 1 A, p. 556, 1904.

[c] See also Mabery, Am. Chem. Jour., vol. 18, p. 215, 1896, for analyses of gas, largely methane, from southern Ohio. Höfer (Das Erdöl, pp. 100–103) gives many other data. In Boverton Redwood's Petroleum and its Products, 2d ed., vol. 1, pp. 246–250, 1906, full tables of analyses are given, with excellent references to literature. An unusual analysis is cited by G. B. Richardson in Bull. U. S. Geol. Survey No. 260, p. 481, 1905. Many other analyses are published in Trans. Am. Inst. Min. Eng., vol. 15, pp. 529 et seq.

E. Mean of four gases from Indiana and three from Ohio, analyzed by C. C. Howard for the United States Geological Survey. Cited by W J McGee, Eleventh Ann. Rept. U. S. Geol. Survey, pt. 1, p. 592, 1891.

F. From Osawatamie, Kansas.[a] From a table of seven analyses by E. H. S. Bailey, Kansas Univ. Quart., vol. 4, p. 1, 1895.

	A.	B.	C.	D.	E.	F.
CH_4					93.36	97.63
Paraffins[b]	96.36	98.90	87.27	93.56		
C_2H_4, etc					.28	.22
CO					.53	1.32
CO_2	3.64	.40	.41	.14	.25	.22
H_2	none	none	none	none	1.76	none
N_2	none	.70	12.32	6.30	3.28	.60
H_2S	none	none	none	none	.18	
O_2	none	none	none	none	.29	trace
	100.00	100.00	100.00	100.00	99.93	100.00

[a] According to H. P. Cady and D. F. McFarland (Trans. Kansas Acad. Sci., vol. 20, p. 80, 1907) the natural gas of Kansas contains helium. It was found in 44 samples, in amounts from 0.01 to nearly 2 per cent.

[b] Largely CH_4, with more or less ethane. CO not found by Phillips.

The analyses of Pennsylvania gases by S. P. Sadtler[a] gave somewhat different results. In gas from four different wells he found, in percentages, CH_4, 60.27 to 89.65; C_2H_6, 4.39 to 18.39; and H_2, 4.79 to 22.50. These high figures for hydrogen are unusual and suggest a resemblance to coal gas. In all cases, however, methane is the preponderating constituent, the characteristic hydrocarbon of natural gas. In the natural gas of Point Abino, Canada, F. C. Phillips[b] found 96.57 per cent of paraffins and 0.74 of H_2S.

Hydrocarbons of the form C_nH_{2n} are, as constituents of petroleum, of equal importance to the paraffins. These again fall into several independent series, which vary in physical properties and in their chemical relations, but are identical in percentage composition. One series, the olefines, is parallel to the paraffin series, and the following members of it are said to have been isolated from petroleum.[c]

So-called "olefines" isolated from petroleum.

Name.	Formula.	Melting point.	Boiling point.
1. Gaseous:			
Ethylene	C_2H_4		−103
Propylene	C_3H_6		− 18
Butylene	C_4H_8		− 5
2. Liquid:			
Amylene	C_5H_{10}		+ 35
Hexylene	C_6H_{12}		68
Heptylene	C_7H_{14}		98
Octylene	C_8H_{16}		124
Nonylene	C_9H_{18}		153
Decylene	$C_{10}H_{20}$		172
Undecylene	$C_{11}H_{22}$		195
Duodecylene	$C_{12}H_{24}$		216
Tridecylene	$C_{13}H_{26}$		232.7
Cetene	$C_{16}H_{32}$		275
	$C_{20}H_{40}$		
3. Solid:			
Cerotene	$C_{27}H_{54}$	65–66	
Melene	$C_{30}H_{60}$	62	

[a] Second Geol. Survey Pennsylvania, Rept. L, pp. 146–160, 1876. Sadtler cites some analyses by other chemists.

[b] Jour. Am. Chem. Soc., vol. 20, p. 696, 1898.

[c] See H. Höfer, *Das Erdöl*, p. 65.

This table is probably exact in an empirical sense, but not so constitutionally. Hydrocarbons of the indicated composition have undoubtedly been found, and some of them are certainly olefines. According to C. F. Mabery,[a] however, the true olefines, the "open-chain" series, are present in petroleum at most in very small amounts. In Canadian petroleum Mabery and W. O. Quayle [b] identified hexylene, heptylene, octylene, and nonylene. In other cases, and notably in the Russian petroleums, the compounds C_nH_{2n} are not olefines, but cyclic hydrocarbons of the polymethylene series, which were originally called naphtenes. They were at first supposed to be derivatives of the benzene series, and it is only within recent years that their true constitution has been determined. In Russian oils they are the principal constituents, and according to C. F. Mabery and E. J. Hudson [c] they also predominate in California petroleum.

Members of the series from C_7H_{14} to $C_{15}H_{30}$ were isolated from the California material. Mabery and S. Takano [d] also found that Japanese petroleum consisted largely of C_nH_{2n} hydrocarbons. Other similar occurrences are recorded in the treatises of Höfer and Redwood.[e]

The series C_nH_{2n-2} is often called the acetylene series, after its first member, acetylene, C_2H_2. The lower members of this series seem not to have been found in petroleum; but several of its higher members are characteristic of oils from Texas, Louisiana, and Ohio. In oil from the Trenton limestone of Ohio, Mabery and O. H. Palm [f] found hydrocarbons having the composition $C_{19}H_{36}$, $C_{21}H_{40}$, $C_{22}H_{42}$, and $C_{24}H_{46}$. With these compounds were members of the C_nH_{2n} series as high as $C_{17}H_{34}$. There were also members of the next series, C_nH_{2n-4}—namely, $C_{23}H_{42}$, $C_{24}H_{44}$, and $C_{25}H_{46}$. In petroleum from Louisiana, C. E. Coates and A. Best [g] found the hydrocarbons $C_{12}H_{22}$ and $C_{14}H_{26}$. These, together with $C_{16}H_{30}$, were also separated by Mabery [h] from Texas oils. These oils are furthermore peculiar in containing free sulphur, which separates out in crystalline form.[i] In

[a] Jour. Am. Chem. Soc., vol. 28, p. 415, 1906. An important summary of our knowledge relative to the composition of American petroleums.

[b] Proc. Am. Acad., vol. 41, p. 89, 1905.

[c] Idem, vol. 36, p. 255, 1901.

[d] Idem, p. 295.

[e] In vol. 2 of Redwood's great work, there is a bibliography of petroleum covering nearly 6,000 titles. In the text Redwood gives a full discussion of the composition of various petroleums, and so too does Höfer. Only the barest outline of the subject can be given here, and that must presuppose a knowledge on the part of the reader of elementary organic chemistry.

[f] Am. Chem. Jour., vol. 33, p. 251, 1905.

[g] Jour. Am. Chem. Soc., vol. 25, p. 1153, 1903.

[h] Idem, vol. 23, p. 264, 1901. See also on Texas oils, C. Richardson and E. C. Wallace, Jour. Soc. Chem. Ind., vol. 20, p. 690, 1901; F. C. Thiele, Am. Chem. Jour., vol. 22, p. 489, 1899; W. B. Phillips, Bull. No. 5, Univ. Texas, 1902; C. W. Hayes and W. Kennedy, Bull. U. S. Geol. Survey No. 212, 1903; R. T. Hill, Trans. Am. Inst. Min. Eng., vol. 33, p. 363, 1903; and N. M. Fenneman, Bull. U. S. Geol. Survey No. 282, 1906. Fenneman describes both Texas and Louisiana petroleums.

[i] See C. Richardson and E. C. Wallace, Jour. Soc. Chem. Ind., vol. 21, p. 316, 1902; and Thiele, Chem. Zeitung, vol. 26, p. 896, 1902.

petroleum from Santa Barbara, California, Mabery[a] discovered hydrocarbons of the three series C_nH_{2n-2}, C_nH_{2n-4}, and C_nH_{2n-8}, represented by the formulæ $C_{13}H_{24}$, $C_{16}H_{30}$, $C_{17}H_{30}$, $C_{18}H_{32}$, $C_{24}H_{44}$, $C_{27}H_{46}$, and $C_{29}H_{50}$.

Hydrocarbons of the series C_nH_{2n-6}, the "aromatic" or benzene series, occur in nearly all petroleums, but in usually subordinate amounts. Their empirical formulæ, ignoring the existence of isomeric compounds, are as follows:

Benzene	C_6H_6
Toluene	C_7H_8
Xylene	C_8H_{10}
Cumene	C_9H_{12}
Cymene	$C_{10}H_{14}$
Etc.	

According to Mabery,[b] Pennsylvania petroleum contains small proportions of the lower members of this series, and Mabery and Hudson[c] found larger amounts of them, especially of the xylenes, in California oil. Numerous other examples are cited by Höfer and Redwood, but they need not be multiplied here.[d] Naphthalene, $C_{10}H_8$, is the only compound of the series C_nH_{2n-12} which has been certainly identified in petroleum. It was found by C. M. Warren and F. H. Storer[e] in Rangoon oil, and also by Mabery and Hudson in oil from California. In one of Mabery and Hudson's distillations of crude oil, so much naphthalene was present that the distillate became solid on slight cooling. Still more complex hydrocarbons have been found in petroleum residues, but it is possible that they were formed during the process of refining. It is not certain that they were originally present in the natural oil.[f]

In many petroleums small quantities of oxidized bodies are contained, sometimes complex acids, sometimes phenols. According to Mabery,[g] the phenols are found in notable proportions in some California oils, but not in petroleum from the eastern part of the United States.

Nearly all petroleums contain nitrogen, from a trace up to 1 per cent and over. It appears to exist in most cases, if not in all, in the form of complex organic bases, but their constitution is yet to be determined. They are peculiarly abundant in California oil, in which

[a] Am. Chem. Jour., vol. 33, p. 270, 1905.
[b] Jour. Am. Chem. Soc., vol. 28, p. 418, 1906.
[c] Proc. Am. Acad., vol. 36, p. 255, 1890.
[d] In a memoir published since this text was written, R. Zalozlecki and J. Hausmann (Zeitschr. angew. Chemie, 1907, p. 1761) have called attention to the richness of Roumanian petroleum in aromatic hydrocarbons.
[e] Mem. Am. Acad., 2d ser., vol. 9, p. 208, 1865.
[f] For data and references, see Höfer, Das Erdöl, p. 74.
[g] Jour. Am. Chem. Soc., vol. 28, p. 596, 1906.

they were discovered by S. F. Peckham,[a] and Mabery[b] has shown that in some cases they constitute from 10 to 20 per cent of the crude petroleum. Mabery isolated compounds of this class ranging from $C_{12}H_{17}N$ to $C_{17}H_{21}N$, although these formulæ are subject to some uncertainty.

Petroleum free from sulphur is extremely rare, but the amount of this constituent is commonly very small. In some instances, however, the sulphur compounds are annoyingly abundant, as, for example, in the Lima oil of Ohio. In this oil Mabery and A. W. Smith[c] found normal sulphides of the paraffin series, and isolated ten compounds ranging from methyl sulphide, C_2H_6S, to hexyl sulphide, $C_{12}H_{26}S$. In Canadian petroleum Mabery and Quayle[d] discovered another series of sulphur compounds, of the general formula $C_nH_{2n}S$, which they named thiophanes. Eight members of this series were described, between $C_7H_{14}S$ and $C_{18}H_{36}S$. Other sulphur compounds have been mentioned as occasional admixtures in petroleum, and the occurrence of free sulphur in Texas oil has already been noted.[e]

Between liquid petroleum and solid asphalt there are numberless intermediate substances. Indeed, there is no distinct break in the continuity of the series from natural gas to bituminous coal. The latter contains solid hydrocarbons of undetermined character, which break up under the influence of heat, yielding coal gas and various tarry products. Some of the heavier hydrocarbon mixtures are viscous, pasty semifluids; others are black, brittle solids, which resemble coal in their outward appearance. Albertite, grahamite, uintaite, and the so-called "pitch coal" of Oregon are familiar examples of these solid forms.

Many of the solid hydrocarbons have been described as mineral species and given specific names.[f] Scheererite, fichtelite, könlite, hatchettite, ozokerite, Zietrisikite, elaterite, hartite, napalite, etc., are among these substances. They vary widely in composition, being commonly, if not in all cases, mixtures, and they represent different series of hydrocarbons. They also occur under widely differing conditions, indicating genetic distinctions. Some are found in coal in such a way as to show their derivation from vegetable resins; others appear to be inspissated petroleums; others again are associated with

[a] Am. Jour. Sci., 3d ser., vol. 48, p. 250, 1894.

[b] Jour. Soc. Chem. Ind., vol. 19, p. 505, 1900. F. X. Bandrowsky (Monatsh. Chemie, vol. 8, p. 224, 1887) and A. Weller (Ber. Deutsch. chem. Gesell., vol. 20, p. 2097, 1887) have detected nitrogenous bases in European oils.

[c] Am. Chem. Jour., vol. 13, p. 233, 1891.

[d] Proc. Am. Acad., vol. 41, p. 89, 1905. A paper by R. Kayser, published in 1897, contains data relative to sulphur compounds in Syrian asphalt oils. I have not been able to consult his original memoir. Cited by W. C. Day in Jour. Franklin Inst., vol. 140, p. 221, 1895, and also in Köhler's treatise on asphalt.

[e] On sulphur in California petroleum, see S. F. Peckham, Proc. Am. Phil. Soc., vol. 36, p. 108, 1897. Also S. F. and H. E. Peckham, Jour. Soc. Chem. Ind., vol. 16, p. 996, 1897, on the sulphur content of bitumens.

[f] See Dana, System of Mineralogy, 6th ed., pp. 996–1024.

metallic ores, and are seemingly of solfataric origin. Napalite, for example, is found with ores of mercury in California, and the oxygenated compound idrialite occurs under similar conditions in the quicksilver mine of Idria.[a] Most of these substances are found in small quantities, and are so imperfectly described that they need no detailed consideration here. Others, like ozokerite, albertite, grahamite, uintaite, and the various asphaltums and bitumens, occur in large deposits and are of commercial significance.

Ozokerite, for instance, is an important source of paraffin. In fact, it appears to consist largely of the higher hydrocarbons of the paraffin series, although some varieties probably contain compounds of the form C_nH_{2n}. In Caucasian ozokerite F. Beilstein and E. Wiegand[b] found a hydrocarbon to which they gave the name lekene, and which appears to be a polymer of CH_2. In the ozokerite of Utah paraffin predominates, of composition between $C_{18}H_{38}$ and $C_{25}H_{52}$.[c]

Uintaite, or gilsonite,[d] is another black, brittle, lustrous mixture of hydrocarbons found in the Uinta Mountains, Utah. Another similar mineral from Utah was named wurtzilite by W. P. Blake.[e] The exact nature of these hydrocarbons is yet to be determined. The same remark may be applied to the albertite[f] of New Brunswick, the grahamite[g] of West Virginia, the "pitch coal"[h] of Coos Bay, Oregon, and other like substances. The albertite and grahamite fill veinlike fissures in the country rock, into which they were possibly injected when fluid. These hydrocarbons, it should be observed, are fusible, therein differing from coal. They are also variably soluble in organic solvents. Their origin is obscure. Some authors attribute them to the oxidation of lighter oils; others, like S. F.

[a] Bitumen is also common in the New Almaden mines. Its association with the lead and zinc ores of Missouri and with the copper-bearing shales of Mansfeld, Germany, is an occurrence of a different order, with which solfataric action has nothing to do.

[b] Ber. Deutsch. chem. Gesell., vol. 16, p. 1547, 1883.

[c] On Utah ozokerite, see J. S. Newberry, Am. Jour. Sci., 3d ser., vol. 17, p. 340, 1879; and A. N. Seal, Jour. Franklin Inst., vol. 130, p. 402, 1890. A monographic paper on ozokerite by E. B. Gosling (School of Mines Quart., vol. 16, p. 41, 1894) contains a bibliography of the mineral. Der Erdwachsbergbau in Boryslaw, by J. Muck, Berlin, 1903, is an important monograph on ozokerite.

[d] Uintaite has priority, but gilsonite is the name most commonly used. On this bitumen, see J. M. Locke, Trans. Am. Inst. Min. Eng., vol. 17, p. 162, 1887; R. W. Raymond, idem, vol. 18, p. 113, 1888; W. P. Blake, idem, vol. 18, p. 563, 1890; G. H. Stone, on Utah and Colorado asphalts, Am. Jour. Sci., 3d ser., vol. 42, p. 148, 1891; and G. H. Eldridge, Seventeenth Ann. Rept. U. S. Geol. Survey, pt. 1, p. 915, 1896, and also Bull. No. 213, p. 296, 1903. A chemical investigation of gilsonite by W. C. Day is reported in Jour. Franklin Inst., vol. 140, p. 221, 1895.

[e] Trans. Am. Inst. Min. Eng., vol. 18, p. 497, 1890; Eng. and Min. Jour., vol. 48, p. 542, 1889; vol. 49, p. 106, 1890.

[f] C. H. Hitchcock, Am. Jour. Sci., 2d ser., vol. 39, p. 267, 1865; and S. F. Peckham, idem, vol. 48, p. 362, 1869.

[g] J. P. Lesley, Proc. Am. Phil. Soc., vol. 9, p. 183, 1863; and I. C. White, Bull. Geol. Soc. America, vol. 10, p. 277, 1898. J. P. Kimball (Am. Jour. Sci., 3d ser., vol. 12, p. 277, 1876) has described a "grahamite" from Mexico.

[h] W. C. Day, Nineteenth Ann. Rept. U. S. Geol. Survey, pt. 3, p. 370, 1898.

Peckham,[a] regard them as residues from a natural distillation of petroleum. The oxidation theory is borne out by the fact that grahamite, according to White, contains 13.5 to 14.7 per cent of oxygen, while W. C. Day found 14.61 per cent in the Oregon mineral. Furthermore, W. P. Jenney,[b] by aspirating heated air through Pennsylvania petroleum for several hours, partially converted the oil into a substance resembling grahamite. In this experiment, obviously, the more volatile hydrocarbons were distilled away. The two processes, oxidation and distillation, went on simultaneously.

In most cases the solid hydrocarbons found in nature are not given specific names, but are known generically as asphalt or bitumen. The pasty, viscid varieties are called maltha. There are also mixtures of these substances with the material of sandstones, shales, and limestones, forming the so-called asphalt rocks, from which oils or tars can be separated by distillation or melting.

Asphalt and asphalt rock are widely diffused in nature, being found in all parts of the world. Probably the most remarkable occurrence of asphalt is that of the famous "Pitch Lake" in Trinidad, which has been many times described—best, so far as chemical questions are concerned, in two papers by Clifford Richardson.[c] According to Richardson, the "lake" occupies the crater of an old mud volcano or geyser, which has become filled with "pitch." This is an emulsion of water, gas, bitumen, with some other organic substances, and mineral matter. The gas, which is continually evolved, consists principally of hydrogen sulphide and carbon dioxide. The water which permeates the pitch is rich in saline matter, mainly sodium chloride, but it also contains small quantities of borates and of ammoniacal salts, which indicate that it is probably of volcanic origin. An analysis of the purified bitumen gave the following results:

Analysis of Trinidad bitumen.

C	82.33
H	10.69
S	6.16
N	.81
	99.99

The sulphur content of this material led to an investigation of other asphalts. In eighteen hard asphalts the sulphur ran from 3.28 to 9.76 per cent, while in soft asphalts or malthas only 0.60 to 2.29 per cent was found. This leads to the suggestion that sulphur has

[a] Peckham, loc. cit., and also Am. Jour. Sci., 3d ser., vol. 48, p. 389, 1894.

[b] Am. Chemist, vol. 5, p. 359, 1875. For analyses of Texas grahamite see E. T. Dumble, Trans. Am. Inst. Min. Eng., vol. 21, p. 601.

[c] Jour. Soc. Chem. Ind., vol. 17, p. 13, 1898; Rept. Inspector Asphalts and Cements, Washington, D. C., year ending June 30, 1892. See also N. S. Manross, Am. Jour. Sci., 2d ser., vol. 20, p. 153, 1855. W. Merivale (Trans. North of England Inst. Mech. and Min. Eng., vol. 47, p. 119, 1898) has described the "manjak" of Barbadoes, an asphalt resembling that of Trinidad. See also R. W. Ells, Ottawa Naturalist, vol. 23, p. 73, 1907.

been active in hardening the bitumen; that is, in effecting the condensation and polymerization of the hydrocarbons.[a] Oxygen may act in the same way, but is eliminated, after union with hydrogen, as water. Richardson concludes that the bitumen consists in great part of unsaturated hydrocarbons, but their exact nature remains undetermined.[b] He also describes the Bermudez, Venezuela, locally.

SYNTHESES OF PETROLEUM.

Hydrocarbons, notably methane, ethane, acetylene, and benzene, have been repeatedly prepared by laboratory methods from inorganic sources, and also by the breaking down of more complex organic matter. Some of the methods employed have led to the production of substances resembling petroleum, and these alone demand consideration here. Let us begin with the inorganic material.

When cast iron is dissolved in an acid, hydrogen is evolved, but with contaminations that were long ago recognized as akin to hydrocarbons. In 1864 H. Hahn[c] attempted to determine their exact nature by passing the gas through bromine. Organic bromides were thus formed, corresponding to the olefines from C_2H_4 to C_7H_{14}, the general formula being $C_nH_{2n}Br_2$. In hydrogen evolved from spiegeleisen Hahn found still higher hydrocarbons, up to $C_{16}H_{32}$. These were collected by direct condensation in wash bottles without the use of bromine.

In 1873 similar experiments were reported by F. H. Williams,[d] who dissolved spiegeleisen in hydrochloric acid. The gas evolved was passed through tubes immersed in a freezing mixture, and afterwards through bromine. In one experiment 7,430 grams of iron gave 49 grams of directly condensible hydrocarbons, with 325.5 grams of

[a] A well-known method for preparing H_2S is to fuse paraffin with sulphur. The reaction doubtless involves a union of the residues from which hydrogen has been partially withdrawn—that is, the formation of a more condensed hydrocarbon molecule. The reaction does not seem to have been exhaustively studied. Some artificial "asphalts" have been prepared by heating petroleum residues with sulphur, and a similar substance, "byerlite," is made by the slow distillation of such residues in presence of air. The latter product resembles gilsonite. See C. F. Mabery and J. H. Byerly, Am. Chem. Jour., vol. 18, p. 141, 1896. See also references to the sulphur processes in Köhler's monograph, p. 119.

[b] On the composition of asphalt, see also H. Endemann, Jour. Soc. Chem. Ind., vol. 16, p. 121, 1897. For analyses of Texas asphalts see H. W. Harper, Bull. No. 3, Texas Univ. Min. Survey, p. 108, 1902. Elaborate data are also given by G. H. Eldridge, Twenty-second Ann. Rept. U. S. Geol. Survey, pt. 1, p. 209, 1901, in a long paper on the asphalts and bituminous rocks of the United States. Important monographs on asphalt are by H. Köhler, Die Chemie und Technologie der natürlichen und künstlichen Asphalte, Braunschweig, 1904; and P. Narcy, Les bitumes, Paris, 1898. See also T. Posewitz, Mitt. K. ungar. geol. Anstalt, vol. 15, Heft 4, pp. 235–463, 1907, on petroleum and asphalt in Hungary. Memoirs on the proximate composition of petroleum are innumerable. I have cited, principally, those of Mabery, because they relate specifically to American oils. The limited scope of this volume prevents me from going into details, and a vast literature must be passed over. The fundamental labors of Pelouze and Cahours in France, of Schorlemmer in England, of Markownikoff in Russia, and of others in nearly every country of Europe, can not be given the consideration here which is properly due them.

[c] Liebig's Annalen, vol. 129, p. 57, 1864. Hahn gives references to the earlier investigations.

[d] Am. Jour. Sci., 3d ser., vol. 6, p. 363, 1873.

bromides; and other experiments yielded similar results. The nature of the hydrocarbons was not further investigated.

Much more elaborate researches were those conducted by S. Cloëz,[a] in the years 1874 to 1878. Hydrochloric or sulphuric acid was allowed to act on large quantities of spiegeleisen, and the hydrogen, partly by direct condensation and partly by absorption in bromine, yielded abundant hydrocarbons and their bromides, which were separated by fractional distillation and identified. Ferromanganese gave a particularly large product of hydrocarbons, and a cast manganese, containing 85.4 per cent of metal, was even attacked by water alone, with evolution of similarly carburized hydrogen. In his first paper Cloëz reports that he obtained octylene, C_8H_{16}, by direct condensation, with bromheptylene, $C_7H_{13}Br$, and bromoctylene, $C_8H_{15}Br$, from the bromine solution. In his second paper he described the products obtained during the solution of 600 kilograms of white cast iron, which yielded 640 grams of oily hydrocarbons, 2,780 grams of bromolefines, and 532 grams of paraffins. Seven of the latter were identified, from $C_{10}H_{22}$ up to $C_{16}H_{34}$, hydrocarbons identical with those which occur in petroleum. That is, from the carbides contained in cast iron, a mixture of hydrocarbons chemically resembling petroleum can be prepared.

In recent years, through the development of the electric furnace by Moissan, many carbides have been made and investigated. The greater number of these compounds react with water, yielding hydrocarbons, and the production of acetylene, as an illuminating gas, from calcium carbide, has become an important industry. The metallic carbides, however, differ in their yield of hydrocarbons, and the results obtained may be summarized as follows:[b]

The carbides of lithium, sodium, potassium, calcium, strontium, and barium, treated with water, yield acetylene, C_2H_2.

The carbides of aluminum and glucinum yield principally methane, CH_4.

The carbide of manganese yields a mixture of methane and hydrogen.

The carbides of yttrium, lanthanum, cerium, thorium, and uranium yield mixtures of acetylene, methane, ethylene, and hydrogen. The cerium, lanthanum, and uranium compounds also yield some liquid and solid hydrocarbons. From 4 kilograms of uranium carbide Moissan obtained 100 grams of liquid hydrocarbons, consisting largely of olefines, with some members of the acetylene series and some saturated compounds.

---

[a] Compt. Rend., vol. 78, p. 1565, 1874; vol. 85, p. 1003, 1877; vol. 86, p. 1248, 1878.

[b] See H. Moissan, Compt. Rend., vol. 122, p. 1462, 1896. Also a summary by J. A. Mathews, Jour. Am. Chem. Soc., vol. 21, p. 647, 1899. Berthelot (Compt. Rend., vol. 132, p. 281, 1901) has discussed the reactions thermochemically.

The bearing of these observations upon theories of petroleum formation will be discussed later.

It will be observed that acetylene is a common product of these reactions. But acetylene is not a constituent of petroleum. P. Sabatier and J. B. Senderens,[a] however, have found that when a mixture of hydrogen and acetylene is brought into contact with finely divided metallic nickel at a temperature of 200° a mixture of paraffins is formed which resembles Pennsylvania petroleum. Acetylene alone, in presence of nickel, also yields aromatic hydrocarbons, and a mixture is produced resembling Russian oil. In this connection it should be noted that M. Berthelot[b] long ago proved that acetylene, when heated to the temperature at which glass begins to soften, polymerizes into benzene. Three molecules of C_2H_2 yield one of C_6H_6. Benzene itself, when heated under suitable conditions, loses hydrogen, and the residues combine to form diphenyl, $C_{12}H_{10}$:

$$2C_6H_6 - 2H = C_{12}H_{10} + H_2$$

From acetylene, then, as a starting point, higher hydrocarbons may be generated. These, again, at high temperatures, act upon one another, and the complexity of the final product may be very great. Furthermore, carbon and hydrogen can unite directly. When the electric arc is formed between carbon terminals in an atmosphere of hydrogen, acetylene is produced—a reaction discovered by Berthelot.[c] According to W. A. Bone and D. S. Jerdan,[d] methane and ethane are formed at the same time, but at a lower temperature (about 1,200°) methane is the sole product of the union. Even by passing hydrogen over charcoal at 1,200° methane may be formed.

So much for the inorganic syntheses of hydrocarbons. On the other side of the question it has long been known that the destructive distillation of organic matter, animal or vegetable, under conditions which preclude the free access of air, will produce hydrocarbons and nitrogenous bases. This fact was first applied to the production of an artificial petroleum by C. M. Warren and F. H. Storer[e] as far back as 1865. They prepared a lime soap from menhaden (fish) oil, which, on destructive distillation, yielded a mixture of hydrocarbons hardly distinguishable from coal oil[f] or kerosene. From this mixture they isolated and identified the paraffins pentane, hexane, heptane, and octane; the olefines amylene, hexylene, heptylene, octylene, nonylene, decylene, undecylene, and duodecylene; together with ben-

[a] Compt. Rend., vol. 134, p. 1185, 1903. Similar results to those of Sabatier and Senderens have recently been obtained by K. Charitschkoff, Chem. Zentralbl., 1907, p. 294.

[b] Ann. chim. phys., 4th ser., vol. 12, p. 52, 1867.

[c] Idem, 3d ser., vol. 67, p. 64, 1863.

[d] Jour. Chem. Soc., vol. 71, p. 41, 1897; vol. 79, p. 1042, 1901. See also J. N. Pring and R. S. Hutton, idem, vol. 89, p. 1591, 1906.

[e] Mem. Am. Acad., 2d ser., vol. 9, p. 177, 1865.

[f] Coal oil is oil distilled from shale or coal. The term is not synonymous with petroleum, although it is often, loosely, so used.

zene, toluene, xylene, and isocumene, members of the aromatic series. A true artificial petroleum had been prepared.

In 1888 C. Engler's famous investigations [a] were made public. He distilled menhaden oil, unsaponified, at a temperature between 320° and 400°, and under a pressure of ten atmospheres. The distillate resembled petroleum, and contained the paraffins from C_5H_{12} up to C_7H_{16}. In a later memoir [b] he mentions the isolation of normal octane and nonane, with secondary hexane, heptane, and octane. In a still later research with T. Lehmann [c] he also obtained olefines from C_6H_{12} up to C_9H_{18} and some derivatives of the benzene series. These experiments upon fish oil confirmed those of Warren and Storer, but differed from theirs in the direct use of the oil instead of its fatty acids alone. The lime soap of the American chemists contained only the acids of the oil, separated from its glycerine; the entire oil was used by Engler. From his crude product Engler also prepared an illuminating oil, practically indistinguishable from commercial kerosene.[d]

Analogous experiments, but with a somewhat different purpose, were carried out by W. C. Day.[e] A mixture of fish (fresh herring) and resinous pine wood was distilled from an iron retort, the process being continued to complete carbonization of the residual material. The distillate consisted of a mixture of oil and water, and the oil, upon redistillation, yielded a residue closely resembling gilsonite. When fish alone was distilled, the final product was more like elaterite. Wood alone gave a similar oil, with a similar residue on redistillation. In this research, then, artificial asphalts were obtained, curiously resembling the natural substances. They also, like ordinary asphalt, contained some nitrogen.

Vegetable oils likewise yield hydrocarbons upon destructive distillation. S. P. Sadtler,[f] for example, established this fact with regard to linseed oil, but the nature of the product was not completely determined. Engler [g] obtained hydrocarbons by the distillation of colza and olive oils, as well as from fish oil, butter, and beeswax. Furthermore, J. Marcusson [h] cites an experiment in which pure oleic acid was heated for several hours to 330° in a sealed tube. On opening the tube there was a strong evolution of gas, and in the residue a product was found which completely resembled a lubricating oil from petroleum. These examples are only two out of many which might be adduced.

---

[a] Ber. Deutsch. chem. Gesell., vol. 21, p. 1816, 1888.
[b] Idem, vol. 22, p. 592, 1889.
[c] Idem, vol. 30, p. 2365, 1897.
[d] Observations confirmed by Redwood, Petroleum and its Products, 2d ed., vol. 1, p. 259.
[e] Am. Chem. Jour., vol. 21, p. 478, 1899.
[f] Proc. Am. Phil. Soc., vol. 36, p. 93.
[g] Cong. internat. du pétrole, Paris, 1900, p. 20.
[h] Chem. Zeitung, vol. 30, p. 789, 1906.

ORIGIN OF PETROLEUM.

Probably no subject in geochemistry has been more discussed than that of the origin of petroleum. Theory after theory has been proposed, and controversy is still active. The evidence is abundant, but contradictory, and leads to different conclusions when studied from different points of view.

The theories so far advanced may be divided into two categories—the inorganic and the organic. Let us examine the hypotheses separately. The earlier speculations connecting the formation of petroleum with volcanic phenomena may be passed over, for the reason that they were framed at a time when essential evidence was not available. They were speculations, nothing more. The modern era begins with a memoir by M. Berthelot,[a] published in 1866.

Berthelot started from a supposition of Daubrée that the interior of the earth might contain free alkaline metals. Upon these, as Berthelot had previously shown, carbon dioxide could react at high temperatures, forming acetylides from which, with water, acetylene would be generated, with all of its possibilities of condensation into higher hydrocarbons. The weak point of the hypothesis, which Berthelot only advances tentatively, is that no evidence exists to show that the alkaline metals are present in an uncombined state at any point below the surface of the earth. The starting point is a pure assumption, which is more likely to be erroneous than true.

Leaving out of account the oft-cited paper by H. Byasson,[b] which has no present value, we come next to the famous carbide theory of D. Mendeléef,[c] published in 1877. This theory presupposes the existence of iron carbides within the earth, to which percolating waters gain access, generating hydrocarbons. If such carbides exist at reasonable depths below the surface of the earth, the suggested reactions would presumably take place; but the major premise is as yet unproved. The actual existence of the carbides in nature remains to be demonstrated.

Mendeléef's hypothesis naturally attracted much attention and was rendered plausible by researches like those of Hahn, Williams, and Cloëz upon the production of hydrocarbons from cast iron. It was still further strengthened by the discoveries of Moissan, in his development of the electric furnace, and has had many advocates. Moissan[d] himself has adopted it, and also suggested that volcanic ex-

[a] Ann. chim. phys., 4th ser., vol. 9, p. 481, 1866.

[b] Compt. Rend., vol. 73, p. 611, 1871. A later, separate brochure by Byasson I have not seen.

[c] Ber. Deutsch. chem. Gesell., vol. 10, p. 229, 1877; Jour. Chem. Soc., vol. 32, p. 283. See also Mendeléef's Principles of Chemistry, English translation, vol. 1, pp. 364–366, 1891.

[d] Compt. Rend., vol. 122, p. 1462, 1896. See also S. Meunier, idem, vol. 123, p. 1327, 1896.

plosions may perhaps be caused by the action of water upon subterranean carbides. He admits, however, that some petroleums are possibly of organic origin. The presence of marsh gas in volcanic emanations [a] may be cited in support of Moissan's suppositions, but this well-recognized fact can be interpreted otherwise. Another favorable datum has been furnished by O. Silvestri,[b] who found in basaltic lavas from near Etna both liquid oils and a solid paraffin which melted at 56°. These hydrocarbons, as well as the marsh gas, may conceivably have been formed either through a direct union of carbon and hydrogen or from material distilled by volcanic heat out of adjacent sedimentary rocks. None of the possible hypotheses to account for their origin is definitely conclusive.

Two other speculations upon the genesis of petroleum from inorganic matter remain to be mentioned, if only for the sake of completeness. N. V. Sokoloff,[c] in 1890, argued that the bitumens are of cosmic origin, formed initially during the consolidation of the planet, inclosed within the primeval magma, and since emitted from the earth's interior. In support of this conception he cites the occasional finding of hydrocarbons in meteorites,[d] cases in which the possibility of an organic origin seems to be absolutely excluded.

The other speculation is that of O. C. D. Ross,[e] who has tried to show that petroleum may originate from the action of solfataric gases upon limestones. Ross wrote various chemical equations to show how the reactions might occur, but they are improbable and experimentally unverified.

It will be seen, upon consideration, that these inorganic theories concerning the origin of petroleum relate not only to its proximate genesis, but to fundamental questions of cosmology. Sokoloff's hypothesis is an indication of this fact, and the assumption of carbides within the earth represents an effort in the same direction. An illustration of this implication is to be found in Lenicque's remarkable memoir,[f] which was cited in Chapter II of this volume. If the molten globe had at any time a temperature like that of the electric furnace, carbides, silicides, nitrides, etc., would be among the earliest compounds to form, and oxidation could not begin until later. Un-

[a] See *ante*, Chapter VIII.

[b] Gazz. chim. ital., vol. 7, p. 1, 1877; vol. 12, p. 9, 1882.

[c] Bull. Soc. imp. nat. Moscou, new ser., vol. 3, p. 720, 1890.

[d] See F. Wöhler, Liebig's Annalen, vol. 109, p. 349, 1859, on carbon compounds in the meteorite of Kaba, Hungary. Also S. Meunier, Compt. Rend., vol. 109, p. 976, 1889, on the meteorite of Mighei, Russia. A. E. Nordenskiöld (Pogg. Annalen, vol. 141, p. 205, 1870) found carbonaceous matter in the meteorite of Hessle, Sweden; and G. Tschermak (Sitzungsb. Akad. Wien, vol. 62, Abth. 2, p. 855, 1870) reports 0.85 per cent of a hydrocarbon in the stone which fell at Goalpara, India. The well-known meteors of Orgueil, France, and Cold Bokkeveld, South Africa, were largely carbonaceous. On Orgueil, see S. Cloëz, Compt. Rend., vol. 59, p. 37, 1864. Graphite and amorphous carbon are common in meteorites, and in some falls diamonds have been found.

[e] Chem. News, vol. 64, p. 14, 1891. A criticism by Redwood appears on p. 215.

[f] Mem. Soc. ingén. civils, France, October, 1903, p. 346.

der such conditions some carbides might remain unoxidized through many geologic ages, to be reached by percolating waters at the present day. The development of hydrocarbons would then inevitably follow, although to what extent they might be subsequently consumed no one can say. The theory is plausible, but is it capable of proof? Furthermore, does it account for any accumulations of petroleum such as yield the commercial oils of to-day? These essential questions are too often overlooked, and yet they are the main points at issue. We may admit that hydrocarbons are formed within volcanoes, but the quantities traceable to such a source are altogether insignificant. Bitumens occur in small amounts in many igneous rocks, but never in large volume. They are, moreover, absent, at least in significant proportions, from the Archean, and first appear abundantly in Paleozoic time. From the Silurian upward they are plentiful, and commonly remote from great indications of volcanic activity. Even such an occurrence as that of the Pitch Lake in Trinidad, where asphalt is associated with thermal waters, does not necessarily imply a community of origin. It is at least conceivable that the solfataric springs may have acted upon sedimentary accumulations of oil, partly by vaporizing the latter and so bringing it to the surface, and partly by effecting, with the aid of steam and sulphur, the condensations or polymerizations that are observed. These considerations serve to show the need of great caution in dealing with this class of problems and to warn us against hasty generalizations. Speculations based upon individual occurrences of petroleum are of very little value. The entire field, in all of its complexity, must be taken into account.[a]

Admitting that methane is sometimes formed as a volcanic emanation, we must also recognize the fact that it is more commonly of organic origin. Its popular name, "marsh gas," is verbal evidence of its derivation from decaying vegetation. Ordinarily, it is generated in apparently small amounts, but gas in Iowa wells has been described [b] which occurs in the drift and seems to be of vegetable origin. Buried vegetation alone can account for its development under the observed conditions.

Apart from the natural occurrences of marsh gas, either in swamps or as the "fire damp" of coal mines, its artificial production has been studied experimentally. F. Hoppe-Seyler [c] and H. Tappeiner [d] have

[a] For an elaborate argument in favor of the volcanic origin of natural gas and oil, see E. Coste, Jour. Canadian Min. Inst., vol. 6, p. 73, 1903. A preliminary notice is given in vol. 3, p. 68, of the same journal, and an abstract in Eng. and Min. Jour., vol. 75, p. 439. See also Trans. Am. Inst. Min. Eng., vol. 35, p. 288, 1905.

[b] See A. G. Leonard, Proc. Iowa Acad. Sci., vol. 4, p. 41. F. M. Witter (Am. Geologist, vol. 9, p. 319, 1892) has described a gas well, about 100 feet deep, near Letts, Iowa.

[c] Ber. Deutsch. chem. Gesell., vol. 16, p. 122, 1883.

[d] Idem, pp. 1734, 1740. See also L. Popoff, abstract in Jour. Chem. Soc., vol. 28, p. 1209, 1875, on gas from river mud near sewer openings.

shown that it is formed by the fermentation of cellulose, together with carbon dioxide and free hydrogen. During the decay of seaweeds, however, according to F. C. Phillips,[a] a little methane is at first evolved, the generated gases consisting largely of carbon dioxide, hydrogen, and nitrogen. The apparatus in which the experiment was performed was allowed to stand in position for two and a half years, and during that time, following the first rapid evolution of gas, a very slow, continuous production was observed. At the end of the period the gas consisted of methane. Phillips concludes, from this evidence, that buried vegetable matter, after a brief era of rapid gas evolution, may pass into a condition of extremely slow decay when methane is generated. It is possible, however, that methane is not the only hydrocarbon thus produced.

From data of this kind, and from the experiments cited in the preceding section of this chapter, it is evident that hydrocarbons analogous to natural gas, petroleum, and asphalt may be derived either from animal or vegetable matter, or from both. This, I think, admits of no dispute, but argument is possible relative to the genesis of the larger accumulations of mineral oil. Engler's researches have led to a widespread belief in the animal origin of petroleum, although the details of the transformation process are very diversely interpreted.[b] Engler[c] himself ascribes the derivation of petroleum from animal remains to a putrefactive process, which removes the nitrogen compounds. The fats remain, to be altered by heat and pressure[d] into hydrocarbons, whose boiling points lie below 300°; and these later undergo a partial autopolymerization into denser forms. How far such a polymerization may be possible, if indeed it is possible at all, is a matter of uncertainty. C. F. Mabery[e] holds that the changes are always in the opposite direction and that the more complex hydrocarbons are formed first, partially breaking down afterwards into lower members of the series. J. Marcusson[f] holds the same view. The putrefactive removal of the albuminoid

[a] Am. Chem. Jour., vol. 16, p. 427, 1894.

[b] For a very complete summary of all the hypotheses relative to the formation of petroleum, see Höfer, Das Erdöl, pp. 160–229, 1906. See also Redwood, Petroleum and its products, vol. 1, pp. 250–261, 1906. Other summaries are by Aisinmann, Zeitschr. angew. Chemie, 1893, p. 739; idem, 1894, p. 122; C. Klement, Bull. Soc. belge géol., 11, proc. verb., p. 76, 1897; R. Zuber, Zeitschr. prakt. Geol., 1898, p. 84, and E. Orton, Bull. Geol. Soc. America, vol. 9, p. 85, 1897. Very recent memoirs on the subject are by P. De Wilde, Arch. sci. phys. nat., 4th ser., vol. 23, p. 559, 1907, and C. Neuberg, Sitzungsb. K. preuss. Akad., May 16, 1907.

[c] Ber. Deutsch. chem. Gesell., vol. 30, p. 2358, 1897.

[d] The importance of pressure in petroleum formation was also urged by G. Krämer and W. Böttcher (Ber. Deutsch. chem. Gesell., vol. 20, p. 595, 1887), in their comparison of the hydrocarbons contained in petroleum and coal oil or tar. H. Monke and F. Beyschlag (Zeitschr. prakt. Geol., 1905, pp. 1, 65, 421) emphasize the putrefactive process, which yields petroleum, as compared with the carbonizing process, which forms coal.

[e] Jour. Am. Chem. Soc., vol. 28, p. 429, 1906.

[f] Chem. Zeitung, vol. 30, p. 788, 1906.

substances is also to be questioned, and it is certainly not universal. The nitrogen bases of California petroleum furnish perhaps the strongest evidence that the proteids contribute their share to the make-up of petroleum, and show also that these particular oils are of animal origin.

Several other writers have brought evidence to bear in favor of the derivation of petroleum from fish remains. Dieulafait [a] observed that the copper shales of Mansfeld are strongly impregnated with bitumen, and also rich in fossil fish. The petroleum of Galicia is always associated with menilitic schists in which fish remains are peculiarly abundant. C. Engler [b] cites some computations by Szajnocha, to the effect that the annual catch of herring on the north coast of Germany would, if its fats were half converted into petroleum, yield in 2,560 years as much oil as Galicia has produced. G. A. Bertels,[c] on the other hand, attributes the Caucasian petroleums to the decomposition of mollusks. In the Kuban district, the oil, accompanied by salt water, exudes directly from beds of molluscan remains, which occur in enormous quantities.

Engler, of course, was not the first to advocate a derivation of petroleum from animal remains. His views have received special attention because of their experimental basis. C. Ochsenius,[d] for instance, has sought to connect the formation of petroleum with that of the mother-liquor salts which accumulate during the last stage of the evaporation of sea water. According to this writer, petroleum is generated from marine organisms, preferably the larger forms, which are buried beneath air-tight sediments and slowly acted upon by the above-named saline residues. As an argument in favor of this hypothesis, he calls attention, as many others have done, to the common association of brine with petroleum, and cites analyses of such waters. F. Heusler [e] also, while indorsing Engler's principal conclusions, invoked the aid of aluminum chloride as an agent in effecting a polymerization of the hydrocarbons. According to Ochsenius's theory, magnesium chloride was the active substance. These suggestions are of very little value, for the reason that the laboratory reactions with aluminum chloride are effected with the anhydrous salt and not with its hydrolyzed aqueous solutions. It is not shown experimentally that the latter would be effective, nor does aluminum

---

[a] Cited by A. Jaccard, Arch. sci. phys. nat., 3d ser., vol. 24, p. 106, 1890.

[b] Ber. Deutsch. chem. Gesell., vol. 33, p. 16, 1900. See also Cong. internat. du pétrole, 1900, p. 30.

[c] Cited by Höfer, Das Erdöl, p. 219, 1906. F. Hornung (Zeitschr. Deutsch. geol. Gesell., vol. 57, Monatsber., p. 534, 1905) argues in favor of fishes as the raw material of petroleum. See also J. J. Jahn, Jahrb. K.-k. geol. Reichsanstalt, vol. 42, p. 361, 1892. For arguments against the theory of Engler, see D. Pantanelli, Bull. Soc. geol. ital., vol. 25, p. 795, 1906. Pantanelli seems to favor the inorganic origin of petroleum.

[d] Chem. Zeitung, vol. 15, p. 935, 1891, and Zeitschr. Deutsch. geol. Gesell., vol. 48, p. 239, 1896. See also his papers cited in Chapter VII, *ante*.

[e] Zeitschr. angew. Chemie, 1896, pp. 288, 318.

chloride occur in any notable quantity in natural waters.[a] A more probable function of the salts, according to R. Zaloziecki,[b] is to retard and modify the decay of animal matter on or near the seashore, and so to give time for its transformation into petroleum. The latter process need not be very slow, for E. Sickenberger[c] has shown that in small bays of the Red Sea, where the salinity reaches 7.3 per cent, petroleum is actually forming as a scum upon the surface of the water. Living forms are abundant in these bays, and their remains, after death, furnish the hydrocarbons. The latter are to some extent absorbed into the pores of coral reefs, and so contribute to the formation of bituminous limestones. A still earlier publication by O. F. Fraas[d] contains data of similar purport. Fraas found in Egypt shells filled with bitumen, and noticed that the bituminous beds were rich in fossils, while the nonbituminous strata were poor. In the region of the Dead Sea, also, Fraas noticed that bitumen was abundant in beds of baculites, from which it exudes to accumulate upon the shore. In this connection it may well be noted that the brines which are so often associated with petroleum have, as a rule, a composition indicative of a marine origin, and do not resemble solfataric or volcanic waters.[e] Furthermore, Mendeléef's objection to the possibility of forming petroleum at the bottom of the sea—namely, that being lighter than water it would float away and be dissipated—is not only negatived by Sickenberger's observations, but also by the well-known fact that mud and clay are capable of retaining oily matters mechanically. The littoral sediments probably aid in the process of petroleum formation, if only to the extent of retaining the fatty substances from which the oil is to be produced. The beds of sulphur which occur adjacent to some oil wells, notably in Texas, were probably formed by the reducing action of organic matter upon sulphates, such as gypsum, a mineral which is often associated with marine deposits and with petroleum. The association of gas, oil, salt, sulphur, and gypsum, which some writers have taken as evidence of former volcanism, is much more simply interpreted, both chemically and geologically, as due to the decomposition of organic matter in shallow, highly saline waters near the margin of the sea.

The derivation of petroleum from vegetable remains has had many advocates, although the hypotheses have not all been framed on the

---

[a] A possible exception to this statement is cited by Ochsenius (Zeitschr. Deutsch. geol. Gesell., vol. 48, p. 239, 1896), who mentions a water containing, in its solid residue, 23.91 per cent of $AlCl_3$. This water accompanied a petroleum.

[b] Chem. Zeitung, vol. 15, p. 1203, 1891.

[c] Idem, p. 1582.

[d] Bull. Soc. sci. nat. Neuchâtel, vol. 8, p. 58, 1868. See also F. C. Phillips, Proc. Am. Phil. Soc., vol. 36, p. 121, 1897, on petroleum inclosed in fossils.

[e] The waters accompanying the naphtha of the Grosny district, Russia, as analyzed recently by K. Charitschkoff (Chem. Zeitung, 1907, p. 295), appear to be exceptional. In these sodium carbonate is more abundant than the chloride, and salts of ammonium and the amines are also present.

same lines. L. Lesquereux,[a] studying the Devonian oils of the eastern United States, argued in favor of their derivation from cellular marine plants, especially fucoids, whose remains abound in the petroliferous formations. Ligneous or fibrous plants, on the other hand, yield coal. This hypothesis led Vouga[b] to suggest that great masses of fucus, like those of the Sargasso Sea, might sink to the bottom of the ocean, and there, decomposing under pressure, could yield petroleum. Redwood[c] states that the salt marshes of Sardinia are sometimes covered by sheets of seaweed, which are in process of decomposition into an oily substance resembling petroleum, and similar occurrences have been noted on the coast of Sweden. These phenomena are probably not exceptional and deserve a more precise examination than they have received hitherto. An observation by W. L. Watts[d] that the saline waters associated with petroleum in the central valley of California are unusually rich in iodine appears to have some relation to this class of hypotheses. Watts connects this iodine with the familiar content of iodine in seaweed, and regards the latter as a probable source of this particular oil.

Data of this class might be multiplied almost indefinitely. For instance, C. E. Bertrand and B. Renault[e] have shown that Boghead mineral, torbanite, and kerosene shale, from which oils are distilled, are derived from gelatinous algæ, whose remains are embedded in what was once a brown, humic jelly. This observation may be correlated with the views advanced by J. S. Newberry[f] and S. F. Peckham,[g] who regard the liquid petroleums as natural distillates from carbonaceous deposits, which latter were laid down at depths below the horizons where the oil is now found. The heat generated during metamorphism is supposed to be the dynamic agent in this process, although many productive regions show no evidence that any violent metamorphoses have ever occurred.

In 1843 E. W. Binney and J. H. Talbot[h] reported a peculiar occurrence of petroleum permeating a peat bog, Down Holland Moss, not far from Liverpool, England. The origin of this oil was obscure, but was attributed by the authors to an alteration of the peat itself, a mode of genesis which later writers have doubted. J. S. New-

---

[a] Bull. Soc. sci. nat. Neuchâtel, vol. 7, p. 234, 1866.

[b] See discussion following Lesquereux's communication.

[c] Petroleum and its products, 2d ed., vol. 1, pp. 126, 142.

[d] Bull. No. 19, California State Mining Bur., p. 202. See also Bull. No. 3 for more details. In Bull. No. 16, 1899, A. S. Cooper discusses at length the genesis of petroleum and asphalt in California. Bulls. Nos. 31 and 32 also relate to this subject.

[e] Compt. Rend., vol. 117, p. 593, 1893. See also Bertrand, Compt. Rend. VIII Cong. géol. internat., 1900, p. 458.

[f] Geology of Ohio, vol. 1, p. 158, 1873. See also an earlier paper by Newberry, Rock Oils of Ohio, in Fourteenth Ann. Rept. Ohio State Board Agric., p. 605, 1859.

[g] Proc. Am. Phil. Soc., vol. 10, p. 445, 1868; vol. 37, p. 108, 1898.

[h] Published in Trans. Manchester Geol. Soc., vol. 8, p. 41, 1868. Curiously, a later paper by Binney appears earlier, namely, in vol. 3, p. 9, 1860.

berry,[a] however, states that in the Bay of Marquette, where the shore consists of peat overlying Archean rocks, bubbles of marsh gas arise, together with drops which cover the surface of the water, in spots, with an oily film. The following investigations seem to bear upon the problems suggested by these observations:

In 1899 A. F. Stahl[b] and, independently, G. Krämer and A. Spilker[c] called attention to a possible derivation of petroleum from diatoms, which abound in certain bogs. These organisms, according to Krämer and Spilker, contain drops of oily matter, and from diatomaceous peat a waxy substance, resembling ozokerite, can be extracted.[d] The theory, based upon these data, is briefly as follows: A lake bed becomes filled in time with diatomaceous accumulations, over which a cover of other growths or deposits is formed. By decay of the organic substances, ammonium carbonate is produced, which hydrolyzes the wax, and from the resulting acid carbon dioxide, carbon monoxide, and water are gradually eliminated. Ozokerite is thus formed, which, at moderate temperatures and under pressure, becomes converted into liquid petroleum. With higher temperatures and pressures, in presence of sulphur, heavier oils and asphalt may be generated. In support of this hypothesis the authors describe a lake bed, near Stettin, which is about 23 feet thick and consists chiefly of diatoms. This deposit yields a wax containing over 10 per cent of sulphur, and from it a hydrocarbon, resembling the lekene from ozokerite, was isolated.

Krämer and Spilker's views have not met with very general acceptance, but they seem to contain elements of value. H. Potonié's hypotheses,[e] for example, seem to be a broadening of Krämer and Spilker's. This writer calls attention to the "faulschlamm" or "sapropel," a slime, rich in organic matter, which is formed from gelatinous algæ, and accumulates at the bottom of stagnant waters. Such a slime, Potonié believes, may be the parent substance from which bitumen, by a process of decay, was probably derived. In this connection, and with reference to the adequacy of the proposed source, it is well to remember the enormous accumulation of "oozes," namely, the radiolarian and globigerina oozes, on the bottom of the sea. The organic matter thus indicated is certainly abundant enough, if it can decay under proper conditions, to form more hydrocarbons than the known deposits of petroleum now contain.[f]

---

[a] Ann. New York Acad. Sci., vol. 2, p. 277, 1882

[b] Chem. Zeitung, vol. 23, p. 144, 1899. Also note in vol. 30, p. 18, 1906.

[c] Ber. Deutsch. chem. Gesell., vol. 32, p. 2940, 1899; vol. 35, p. 1212, 1902. Criticism by Engler in vol. 33, p. 7, 1900.

[d] See also C. E. Guignet, Compt. Rend., vol. 91, p. 888, 1880, on wax from peat.

[e] Natur. Wochenschr., vol. 20, p. 599, 1905.

[f] These oceanic sediments are especially noticed by Engler in a paper read before the petroleum congress in 1900 (Cong. internat. du pétrole, Paris, 1900, p. 28). In A. Beeby Thompson's monograph, The Oil Fields of Russia, pp. 85–87, London, 1904, a theory is developed to account for the probable formation of bitumens on the sea bottom. Thompson regards fish remains as an important source of supply.

These remarks upon the oceanic sediments at once suggest an intermediate group of hypotheses, which assume a mixed origin for petroleum. Animal matter in some cases, vegetable matter in others, or both together, are supposed to be the initial source of supply. A. Jaccard,[a] for example, argues that the liquid oils are derived from marine plants, while the viscous or solid bitumens may originate from mollusks, radiates, etc. Some oils, again, are supposed to be of mixed origin, and it would seem probable that the last class is the most common. Ideas of this kind have repeatedly been enunciated with reference to American petroleums—that of Pennsylvania being attributed to marine vegetation, that of California to animal remains. The American literature of petroleum is rich in suggestions of this order.[b]

It has long been known that some petroleums are optically active; that is, they are able to rotate a ray of polarized light, sometimes to the right and sometimes to the left. This, according to P. Walden,[c] gives us an important datum toward determining the origin of petroleum. Only the oils derived from organic matter, Walden asserts, can possess this property; the hydrocarbons prepared from inorganic materials, such as metallic carbides, being optically inert. The oils distilled from coal, which is evidently of vegetable origin, are active; and petroleum, which has the same peculiarity, is presumably formed from similar materials. These conclusions are exceedingly important, but need to be more thoroughly tested before they can demand universal acceptance. The presumption, however, is strongly in their favor.

In any attempt to discover the genesis of petroleum the quantitative adequacy of the proposed sources must be taken into account. In such an inquiry superficial observations are deceptive, for one is apt to overrate the visible and productive accumulations which furnish the oils of commerce. These seem large, but they are relatively insignificant. As Orton[d] has said, disseminated petroleum is wellnigh universal; the accumulations are rare. In certain districts the shales and limestones are generally impregnated with traces of

---

[a] Eclog. Geol. Helvet., vol. 2, p. 87, 1890. See also Arch. sci. phys. nat., 3d ser., vol. 23, p. 501, 1890; vol. 24, p. 106, 1890. Jaccard studied especially the bitumens of the Jura.

[b] In addition to the memoirs already cited, see the reports of the Second Geol. Survey Pennsylvania. Also J. A. Bownocker, Geol. Survey Ohio, 4th ser., Bull. No. 1, 1903; S. S. Gorby, Sixteenth Ann. Rept. Indiana Dept. Geol. and Nat. Hist., 1888; W. S. Blatchley, idem, Twenty-eighth Ann. Rept., 1904; E. Haworth, Univ. Geol. Survey Kansas, vol. 1, p. 232, 1896; H. P. H. Brumell, Geol. Survey Canada, new ser., Ann. Rept. 5, Q, 1893; and W J McGee, Eleventh Ann. Rept. U. S. Geol. Survey, pt. 1, p. 589, 1891. L. Harperath (Bol. Acad. nac. cien. Córdoba (Argentina), vol. 18, p. 153, 1905) has published a long memoir on petroleum and salt.

[c] Chem. Zeitung, vol. 30, pp. 391, 1155, 1168, 1906. Walden cites many examples of this optical activity. See also a criticism by Engler, idem, p. 711, and a paper by Rakusin, p. 1042. Another memoir, by J. Marcusson, appears in vol. 31, p. 419, 1907.

[d] First Ann. Rept. Geol. Survey Ohio, chapter 11, 1890; Geol. Survey Kentucky, Report on Occurrence of Petroleum, etc., 1888–89.

bitumens, which seem at first sight to be insignificant, but which really represent enormous quantities. In the Mississippian ("sub-Carboniferous") limestones of Kentucky petroleum is generally present. If it amounts to only 0.10 per cent, each square mile of rock, with a thickness of 500 feet, would yield about 2,500,000 barrels of oil. Even more striking are the figures given by T. Sterry Hunt,[a] who estimates that in the limestone of Chicago, with a thickness of 35 feet, there are 7,743,745 barrels of oil to each square mile of territory. Figures like these, together with the computations, previously cited, made by Szajnocha relative to Galician petroleum, lead to the conviction that the formation of bitumens is a general process and by no means exceptional. Wherever sediments are laid down, inclosing either animal or vegetable matter, there bitumens may be produced. The presence of water, preferably salt, the exclusion of air, and the existence of an impervious protecting stratum of clay seem to be essential conditions toward rendering the transformation possible. Seaweeds, mollusks, crustaceans, fishes, and even microscopic organisms of many kinds may contribute material to the change. In some cases plants may predominate; in others animal remains; and the character of the hydrocarbons produced is likely to vary accordingly, just as petroleum varies in different fields. In one region we find chiefly paraffins, in another naphthenes, and in another nitrogenous or sulphureted oils. Such differences can not be ignored, and they are most easily explained on the supposition that different materials have yielded the different products. On this class of problems the chemist, the geologist, and the paleologist must work together. Physics also is entitled to be heard; for, as D. T. Day[b] has shown, petroleum, by simple filtration through fuller's earth, can be separated into fractions which differ in density and viscosity and are therefore of different composition. Such a filtration, or, more precisely, diffusion, must take place in nature wherever migrating hydrocarbons traverse permeable strata.

By whatever class of reactions petroleum is generated, it doubtless appears first in a state of dissemination. How does it become concentrated? This question does not fall within the domain of chemistry, and can not be properly discussed here.[c] Probably circulating waters have much to do with the process, but whatever that may be the laws governing the motion of liquids must inevitably rule. The oils must gather in proper channels, moved by gravitation, or by hydrostatic pressure of waters behind or below them, or by the pressure of dissolved and compressed gases, and they accumulate in

[a] Chemical and Geological Essays, p. 168, 1875.

[b] Cong. internat. du pétrole, Paris, 1900, p. 53.

[c] For a discussion of this problem, see H. Höfer, Das Erdöl, p. 223, 1906. Also G. I. Adams, Trans. Am. Inst. Min. Eng., vol. 33, p. 340, 1903; and D. T. Day, idem, p. 1053. Orton's reports, previously cited, contain important contributions on this theme.

porous rocks or cavities under layers of impervious material. When the latter are lacking, or when the hydrocarbons enter large areas of porous rocks, they may be either evaporated or rediffused. Pressure, temperature, viscosity, and the character of the surrounding rocks must all be taken into account, and each productive area needs to be studied independently with reference to its local conditions.

In conclusion, I may be allowed to suggest that nearly all of the proposed theories to account for the origin of petroleum embody some elements of truth. Sokoloff's cosmic hypothesis is sustained by the fact that hydrocarbons are found in meteorites. The volcanic hypothesis is sustained by the fact that hydrocarbons occur among volcanic emanations. The organic origin of petroleum, however, seems to be best supported by the geologic relations of the hydrocarbons, which are found in large quantities only in rocks of sedimentary character. Any organic substance which becomes inclosed within the sediments may be a source of petroleum, and when the latter happens to be rich in nitrogen, animal matter was probably the initial material. There is no evidence to show that any important oil field derived its hydrocarbons from inorganic sources.

14399—Bull. 330—08——41

CHAPTER XVII.

COAL.

ORIGIN OF COAL.

Although doubts may exist as to the origin of petroleum, there are none whatever as to the essential origin of coal. It is obviously derived from vegetable matter, by a series of changes which are plainly traceable, even though their mechanism is not fully understood. Vegetation, peat, lignite, soft coal, anthracite, and some graphitic minerals form a series of substances which grade one into another in an unbroken line, reaching from complex organic, oxidized compounds at one end to nearly but not quite pure carbon at the other. All of these bodies, except perhaps the last, are indefinite mixtures which vary in composition, and it is therefore impracticable to write chemical equations that shall properly represent their transformations. Such equations, to be sure, have been suggested and written, but they embody fallacies which are easily exposed. They start from the assumption that the principal initial compound contained in vegetation is cellulose, a definite carbohydrate of the formula $C_6H_{10}O_5$, which gradually loses carbon dioxide, marsh gas, and water, and so yields the series of products represented by the different kinds of coal.[a] This assumption, like most other assumptions of its class, is partly true and partly false. Cellulose is an important constituent of vegetable matter, but it stands by no means alone. When it decays, it loses the substances named above and it also undergoes other changes which are difficult to measure. In every swamp or peat bog the waters are charged, more or less heavily, with soluble organic matter of which the written reactions take no account. This soluble matter is found in the waters of all bogs and streams, and it is just as much a factor in the real reactions as are the gaseous products or the solid carbonaceous residues.

If, instead of the composition of cellulose, we begin with the composition of wood, we shall have a better starting point for our series of derivatives. Wood or woody fiber is by no means the only substance to be considered, but it is the most important one, and its ultimate composition has been well determined. Its proximate composition is not so clearly known, but certain available facts are per-

[a] The formula $C_6H_{10}O_5$ represents only the empirical composition of cellulose, and not its true molecular weight. According to A. Nastukoff (Ber. Deutsch. chem. Gesell., vol. 33, p. 2237, 1900), the true formula is probably $40C_6H_{10}O_5$, or $C_{240}H_{400}O_{200}$. This may be an exaggeration, but the molecular weight of cellulose is certainly high.

tinent to the present discussion. It contains cellulose, $C_6H_{10}O_5$, and a substance known as lignone, lignin, or lignocellulose, in about equal proportions, together with other minor organic constituents, such as gums and resins,[a] and some inorganic matter which forms its ash. To lignocellulose, according to Cross and Bevan,[b] the formula $C_{12}H_{18}O_9$ may be assigned; and it is best represented by jute fiber, which consists almost wholly of this substance.

If now, we compare the percentage composition of cellulose, lignocellulose, and wood, we shall see how unsafe it is to write equations intended to show the derivation of coal upon the basis of either definite compound alone. The data are as follows:

Composition of cellulose, lignocellulose, and wood.

A. The composition of cellulose, calculated from its formula.

B. The composition of lignocellulose, similarly computed.

C. The average composition of twenty-four woods, analyzed by Petersen and Schödler, Liebig's Annalen, vol. 17, p. 139, 1836. Samples dried and finely powdered.

D. Average of thirty-six analyses of five different woods, by E. Chevandier, Ann. chim. phys., 3d ser., vol. 10, p. 129, 1844. Samples dried in vacuo at 140°.

E. Average of eight analyses of woods by W. Baer, Jahresb. Chemie, 1847–48, p. 1112. Ash from 0.53 to 2.03 per cent.

F. Average of seven Danish woods, analyzed by E. Gottlieb, Jour. Chem. Soc., vol. 46, p. 477, 1884 (abstract). Dried at 115°.

G. Average composition of five acrogen plants, of the genera *Lycopodium*, *Equisetum*, *Aspidium*, and *Cyathea*, by G. W. Hawes, Am. Jour. Sci., 3d ser., vol. 7, p. 585, 1874. In *Equisetum* the ash ran as high as 11.82 per cent.

	A.	B.	C.	D.	E.	F.	G.
C	44.43	47.06	49.31	51.21	49.16	49.76	48.83
H	6.22	5.89	6.29	6.24	6.10	6.14	6.37
O	49.35	47.05	44.40	42.55	44.74	44.10	44.80
	100.00	100.00	100.00	100.00	100.00	100.00	100.00

All of these analyses are recalculated to an ash-free basis. In the table, for uniformity, the nitrogen is added to the oxygen. Chevandier found, in mean, 1.10 per cent of nitrogen in his woods, but Gottlieb obtained only 0.04 to 0.10. In Hawes's analyses the nitrogen ranged from 1.21 to 2.17 per cent. The differences between the wood analyses are principally due to differences in drying.

From these figures we see that cellulose contains about 5 per cent more oxygen than carbon, while in wood the reverse statement is very nearly true. Even lignocellulose contains less carbon than is actually found in wood. The figures for wood given in column F approximate very nearly to the formula $C_6H_9O_4$, and that expression might be used were wood a definite substance. Its employment, however, is more likely to cause misapprehension than to aid in the elucidation of problems. At best, it can only be taken as a convenient collocation of symbols, more easily borne in mind than the actual percentages.

[a] See M. Singer, Monatsh. Chemie, vol. 3, p. 395, 1882, on the subordinate constituents of wood. The subject is one which can not be properly developed here.

[b] Jour. Chem. Soc., *vol. 55, p. 199, 1889.*

It is generally admitted, I think, by all competent investigators, that coal originated from vegetation which grew in swampy or marshy places. As the vegetation died it underwent a partial decay and was buried under successive layers, either of matter like itself, or else of sediments such as clay. In that way it was protected from complete atmospheric oxidation, and at the same time subjected to fermentative heat and to a gradually increasing pressure. The vegetation was doubtless of many kinds—trees, ferns, grasses, sedges, mosses, etc.—and these all contributed variously to the formation of the future coal. Trees standing erect within a bed of coal, their roots still remaining embedded in an underlying stratum of clay, tell a part of the story. Fossil ferns and even the remains of micro-organisms also add their testimony to what has occurred. In some cases beds of lignite represent submerged forests; and in others, as shown by many geologists, the coal was probably formed, not from vegetation in place, but from drifted materials, a condition, however, which does not affect the chemistry of the carbonizing process. The slow decay of the buried substances is the essential thing for the chemist to consider. With the vegetable matter some animal remains were undoubtedly commingled, helping to increase the nitrogen content of the coal; and the ash of the latter was augmented by more or less inorganic sediment, derived from the wash of the land in times of flood.

A moment's consideration will suffice to show that the process of decay could not have been uniform. The softer plant tissues decompose most rapidly; the more compact ligneous masses endure much longer. Even the trunks of trees must exhibit similar variations, for woods differ in hardness and compactness, and the resinous varieties will rot the slowest of all. The resins themselves show the minimum of change, and where they were most abundant their fossil remnants are found. Amber, fossil copal, the waxes found in peat bogs, and a multitude of similar substances have been thus preserved. In lignite and bituminous coal, aggregations and often large masses of resinous bodies not infrequently occur, and, in a disseminated form, unrecognizable by the eye, they must be almost invariably present. Their quantity, of course, would depend upon the exact character of the vegetation from which a given coal bed was formed. The nature and distribution of the fossil resins deserve much more careful study than they have yet received. Much rarer than the resins are the salts of organic acids, which are sometimes found in coal, especially in lignite. Three of these are well-defined species, namely, whewellite, calcium oxalate; humboldtine, ferrous oxalate; and mellite, the aluminum salt of mellitic acid, $AlC_6O_6.9H_2O$. Compounds of this class are significant in showing the range and variety of the reactions which take part in the formation of coal. Oxalic

acid is easily formed from cellulose, and it is therefore surprising that its salts are not more frequently discovered in peat or coal. The soluble oxalates, of course, would be leached away; but calcium oxalate is insoluble and ought to be more common.

PEAT.

The first stage in the development of coal from vegetable matter seems to be represented, at least approximately, by the formation of peat. The process, as observed, has already been outlined. Mosses, grasses, and other plants—any plants, in fact, which can thrive in marshes—grow, die, and are buried, layer after layer. On the surface of a bog we see the growing plants; a little below the surface, their recognizable remains; still deeper, we find a black, semigelatinous substance from which the vegetable structure has largely disappeared.[a] This substance, saturated with moisture, is peat; dried, it becomes a valuable fuel.

Many analyses of peat have been made, and, as might be expected, they vary widely. The following series by J. Websky[b] is especially suggestive. The samples were dried at 100°, and the analyses calculated on an ash-free basis.

Analyses of sphagnum and peat.

A. Sphagnum, the chief plant of the peat bogs.
B. Light peat, near surface.
C. Light peat.
D. Moderately light peat.
E, F. Black peat.
G. Heavy brown peat.

	A.	B.	C.	D.	E.	F.	G.
C	49.88	50.33	50.86	59.71	59.70	59.71	62.54
H	6.54	5.99	5.80	5.27	5.70	5.27	6.81
O	42.42	42.63	42.57	32.07	33.04	32.07	29.24
N	1.16	1.05	.77	2.95	1.56	2.95	1.41
	100.00	100.00	100.00	100.00	100.00	100.00	100.00

The progressive increase in carbon in passing from sphagnum to heavy peat is clearly shown.

A few other analyses of peat may be profitably cited, as follows:[c]

Analyses of peat.

A. From Thésy, France. Analysis by Marsilly, Ann. mines, 5th ser., vol. 12, p. 406. Dried twenty-four hours in vacuo.

[a] On the rapidity of formation of peat, see a summary by G. H. Ashley, Econ. Geol., vol. 2, p. 34, 1907.

[b] Jour. prakt. Chemie, vol. 92, p. 65, 1864.

[c] For still other analyses, see Roth and Percy, as cited, and vol. 1 of Groves and Thorp's Chemical Technology, pp. 14–20. In the latter work, p. 16, will be found 27 analyses of peat ashes, by Kane and Sullivan. Petersen and Nessler (Neues Jahrb., 1881, p. 82) give 17 ultimate analyses of German peat, with separate analyses of the ash. In a paper by H. B. Kümmel (Econ. Geol., vol. 2, p. 24, 1907) there are many technical analyses of New Jersey peat, with calorimetric data. On the mechanism of peat formation, see N. S. Shaler, Sixteenth Ann. Rept. U. S. Geol. Survey, pt. 4, p. 305, 1895. An important general paper on peat, its rate of growth, its resins, etc., by R. Angus Smith, is given in Mem. Lit. Phil. Soc. Manchester, 1876, p. 281.

B. From Camon, France. Also by Marsilly, who gives seven analyses in all. Dried twenty-four hours in vacuo.

C. From "Hör in Schonen." Analysis by O. Jacobsen, Liebig's Annalen, vol. 157, p. 240, 1871. Dried at 100°.

D. From a lake in Cashmere. Analysis by C. Tookey. See Percy's Metallurgy, vol. 1, p. 206, 1875.

E. Average of ten analyses cited by Roth, Allgem. chem. Geol., vol. 2, p. 642.

	A.	B.	C.	D.	E.
C	50.67	46.11	51.38	37.15	51.97
H	5.76	5.99	6.49	4.08	6.05
O	34.95	35.87	35.43	23.48	34.02
N	1.92	2.63	1.68	2.02	1.34
Ash	6.70	9.40	5.02	33.27	6.61
	100.00	100.00	100.00	100.00	100.00

Reduced to an ash-free basis, in order to compare the organic matter with that of wood, the analyses assume the following form:

Analyses of peat reduced to ash-free basis.

	A.	B.	C.	D.	E.
C	54.31	50.89	54.10	55.67	55.65
H	6.18	6.61	6.83	6.11	6.48
O	37.46	39.58	37.30	35.19	36.43
N	2.05	2.92	1.77	3.03	1.44
	100.00	100.00	100.00	100.00	100.00

As compared with the data already given for wood, these figures show an increase in carbon, a decrease in oxygen, and a notable enrichment in nitrogen. The last gain may be partly from animal matter and partly due to the property which the humus compounds possess of absorbing nitrogen from the air to form the so-called azo-humic acids.[a]

The nature of the changes which have taken place in the transformation of vegetable matter into peat are partly understood. When ligneous fiber decays it yields an amorphous mixture of substances which are known as the humus acids, humic, ulmic, crenic, and apocrenic acids being specific names. These acids are rather ill-defined bodies, and various formulæ have been assigned to them, but none can be said to be established. The acids dissolve in alkaline solutions, and so are partly washed away; but the salts formed with lime and iron probably remain, being insoluble, behind. The ash of peat is commonly rich in lime, not as carbonate, and also in iron, the latter appearing often in large beds of bog ore. The formation of the humus acids appears to take place by a fermentative process, which eliminates some carbon, hydrogen, and oxygen in the form of carbon dioxide, marsh gas, and water; and micro-organisms play some part

[a] This subject was considered in Chapter III, *ante*, p. 83.

in producing the changes observed. On this point, however, there is some doubt, Früh and Schröter,[a] for example, regarding the microbian influence as very small.

Broadly speaking, with temporary disregard of minor constituents, a bed of peat may be said to consist of water, inorganic matter, vegetable fiber, and humus acids. From this point of view H. Bornträger [b] has made analyses of peat, finding in the black varieties from 25 to 60 per cent of the humic substance, with 30 to 60 of fiber. Two of his analyses are as follows:

Analyses of peat (Bornträger).

A. Light-colored peat, Hannover. Mean of two analyses.
B. Black peat, Oldenburg.

	A.	B.
Water	29.50	20.0
Ash	3.05	3.0
Fiber	54.95	47.0
Humus acids	12.50	30.0
	100.00	100.0

In the light-colored peat evidently the changes have not gone so far as in the other.

In some peat beds isolated masses of humic substance are found, to which the mineralogical name dopplerite has been given.[c] According to F. G. Kaufmann,[d] this substance is identical with the part of peat which dissolves in caustic alkali solutions, and he therefore regards peat as a mixture of dopplerite with partly decomposed vegetable matter. He gives analyses by Mühlberg of dopplerite from the peat of Obbürgen, Canton Unterwalden, Switzerland, which, in mean, are as follows:

Average composition of dopplerite.

C	56.46
H	5.48
O+N	38.06
	100.00

The organic portion of dopplerite from the original locality at Aussee, Styria, gave W. Demel [e] nearly identical results, and he as-

[a] Die Moore der Schweiz, Bern, 1904, a superb quarto monograph issued by the Swiss Geological Commission. See especially chapter 3, on peat. The volume contains a bibliography of 280 titles. On the microbian side of the question, see B. Renault, Compt. Rend., vol. 127, p. 825, 1898.

[b] Zeitschr. anal. Chemie, vol. 39, p. 694, 1900; vol. 40, p. 639, 1901.

[c] See Dana, System of Mineralogy, 6th ed., p. 1014. For additional data on dopplerite, see C. Claesson, Chem. Zeitung, vol. 22, p. 523, 1898, and W. Alexejeff, Zeitschr. Kryst. Min., vol. 20, p. 187, 1902.

[d] Jahrb. K.-k. geol. Reichsanstalt, vol. 15, p. 283, 1885.

[e] Ber. Deutsch. chem. Gesell., vol. 15, p. 2961, 1882.

signs to the substance the formula $C_{12}H_{14}O_6$. Its actual occurence in peat, however, is thought by Demel to be as a lime salt and not as the free organic acid.

Peat also contains some ill-defined resinous substances, which are extractable by solution in hot ether or alcohol. In O. Jacobsen's experiments [a] their quantity ran from 2.5 to 3.26 per cent. A crystalline hydrocarbon, fichtelite, is sometimes found in the buried coniferous woods of peat beds. It appears to have been derived from the terpenes of the wood, but its exact nature is uncertain.[b] C. Hell assigned it the formula $C_{30}H_{54}$, and L. Spiegel has argued in favor of $C_{18}H_{30}$.[c] The possible derivation of petroleum-like hydrocarbons from peat was discussed in the preceding chapter.

In its youngest forms peat is loosely compacted, but as it accumulates the under portions become compressed, and what was once a foot thick may shrink to 3 inches.[d] In various localities peat beds have been found buried beneath sediments or drift. Dawson [e] mentions peat underlying bowlder clay in Cape Breton Island, and beds covered by drift have been reported in Iowa.[f] In all probability these occurrences are not exceptional, and the pressure developed by the covering material doubtless aids in the transformation of peat into coal.[g]

LIGNITE.

Under the names lignite and brown coal a number of substances are comprised, which lie between peat on one side and bituminous coal on the other. The names are conventional and not always appropriate, for some lignites are not ligniform, and others are not brown, but black. Geologically, they are modern coals, Tertiary and Mesozoic, and their composition bears some relation to their age. The most recent approach peat; the oldest are nearer the true coals. This is a general, not an absolute relation, for in some cases lignites have been transformed into apparently bituminous coals, or

[a] Liebig's Annalen, vol. 157, p. 240, 1871. See also Mulder, idem, vol. 32, p. 305, 1839.

[b] On fichtelite, see T. E. Clark, Liebig's Annalen, vol. 103, p. 236, 1857; C. Hell, Ber. Deutsch. chem. Gesell., vol. 22, p. 498, 1889; E. Bamberger, idem, p. 635, and L. Spiegel, idem, p. 3369. Also M. Schuster, Min. pet. Mitth., vol. 7, p. 88, 1885.

[c] Reduced to simpler, comparable terms, these formulæ become, respectively, $C_{15}H_{27}$ and $C_{15}H_{25}$. The difference is slight.

[d] See G. H. Ashley, Econ. Geol., vol. 2, p. 34, 1907.

[e] Acadian Geology, 2d ed., p. 68.

[f] See T. H. MacBride, Proc. Iowa Acad., vol. 4, p. 63, 1897; and T. E. Savage, idem, vol. 11, p. 103, 1903.

[g] On American peats, see H. Ries, Fifty-fifth Ann. Rept. New York State Mus., p. r55, 1903; A. L. Parsons, idem, Fifty-seventh Ann. Rept., vol. 1, p. 16, 1905. Parsons cites many analyses. In Ann. Rept. State Geologist New Jersey, 1905, p. 223, W. E. McCourt and C. W. Parmelee describe peat deposits and give a bibliography of the subject. See also R. Chalmers, Min. Res. Canada, 1904, Bull. on Peat, for Canadian data. A partial bibliography of peat is given by J. A. Holmes in Bull. U. S. Geol. Survey No. 290, 1906, pp. 11–15.

even, by metamorphic action, into anthracitic varieties.[a] In many instances fossil charcoals have been observed, resembling ordinary charcoal; and these owe their peculiarities, perhaps, to forest fires, produced either by lightning or by eruptions of igneous rocks.[b]

Among the lignites several distinct varieties exist, which have received characteristic names, as follows:

1. True or xyloid lignite. This is essentially fossil wood in which the ligneous structure is more or less perfectly preserved.

2. Earthy brown coal. This variety is earthy in structure, as its name indicates, and it is often accompanied by mineral resins or fossil hydrocarbons.

3. Common brown coal. The common, compact form of lignite, and the one best known as a fuel.

4. Pitch coal, a compact variety, so named for its peculiar luster.

5. Glance coal. A hard and very compact form of lignite, most nearly resembling the Carboniferous coals.

6. Jet. A very hard variety, probably derived from the fossilization of coniferous wood.[c] Used for jewelry and other ornamental purposes.

As might be supposed, the lignites exhibit a wide range of variation in their composition. The following analyses, selected from a table in Percy's Metallurgy,[d] show this fact clearly. They have been recalculated upon an ash-free, water-free basis.

Analyses of foreign lignites.

A. From Teuditz, Germany. Analysis by Wagner.
B. From Sardinia. Analyst not named.
C. From Schönfeld, Bohemia. Analysis by Nendtwich.
D. From European Turkey. Analyzed by W. J. Ward in Percy's laboratory.
E. From Sardinia. Analyzed by C. Tookey, in Percy's laboratory.

	A.	B.	C.	D.	E.
C	57.02	63.71	69.82	75.08	82.26
H	5.94	5.05	5.90	5.44	6.52
O+N	37.04	31.24	24.28	19.48	11.22
	100.00	100.00	100.00	100.00	100.00

For technical purposes coal analyses are commonly reported in a different form. Moisture and ash are important factors to consider, and so, too, is the distinction between the "volatile matter" and the "fixed carbon." In lignites the moisture is usually very high, for these coals are peculiarly hygroscopic. Like other coals, they also

[a] These transformations have been doubted by Donath, whose work is cited later.

[b] See, for example, A. Daubrée, Compt. Rend., vol. 19, p. 126, 1844, on "mineral charcoal" from the Saarbrücken coal field.

[c] See P. E. Spielmann, Chem. News, vol. 94, p. 281, 1906. For an analysis of Spanish jet see J. B. Boussingault, Ann. chim. phys., 5th ser., vol. 29, p. 382, 1883. The latter memoir contains many other analyses of fossil combustibles.

[d] 1875 edition, vol. 1, pp. 312–313. From a table of 41 analyses.

in sulphur, which is partly organic, partly present as inclosures rite or marcasite, and partly in the form of sulphates, such as m.[a] The following analyses from the reports of the fuel-test-lant of the United States Geological Survey [b] are fair examples technical mode of statement. All samples were air dried.

Analyses of American lignites.

rown lignite, Williston, North Dakota.
ignite from Texas.
ignite from Tesla mine, Alameda County, California.
ignite from Wyoming.
lack lignite from Red Lodge, Montana.[a]

	A.	B.	C.	D.	E.
.....	16.70	22.48	18.51	17.69	9.05
matter.....	37.10	31.36	35.33	37.96	36.70
rbon.....	39.49	26.73	30.67	39.56	43.03
.....	6.71	19.43	15.49	4.79	11.22
	100.00	100.00	100.00	100.00	100.00
.....	.63	.56	3.05	.63	1.76

[a] A coal of doubtful character. Not certainly lignite.

elementary analyses of these coals, when ash, moisture, and ur are thrown out, show less variation.

Elementary analyses of American lignites.

	A.	B.	C.	D.	E.
.....	72.62	73.63	75.19	75.97	77.47
.....	4.93	5.07	6.18	5.36	5.44
.....	1.20	1.35	1.04	1.41	1.75
.....	21.25	19.95	17.59	17.26	15.34
	100.00	100.00	100.00	100.00	100.00

further comparison of the lignites with other fossil fuels, the ned averages will be useful. The data are reduced to an ash-nd water-free standard.

Average analyses of lignites.

verage of 22 Texas lignites, analyzed by Magnenat and Wooten. Dried at 105°.
. T. Dumble's Report on the brown coal and lignite of Texas: Geol. Survey Texas, . 213. This volume contains many technical analyses of lignites, and also tables yses of German, Austrian, and Italian brown coals.
verage of 10 analyses from the report of the fuel-testing plant of the United Geol. Survey, already cited.
verage of 29 lignites from various parts of the world. Analyses by C. Tookey and Yard, in Percy's laboratory. Percy's Metallurgy, vol. 1, pp. 312–321.

resinoid substances which have been named tasmanite and trinkerite are rich nic sulphur compounds of undetermined character. See Dana, System of Mineral- ı ed., p. 1010.
f. Paper No. 48, pt. 1, and Bull. No. 290, 1906. Analyses made under the direc- E. E. Somermeier.

	A.	B.	C.
.....	69.82	74.86	74.17
.....	4.72	5.32	5.67
.....	25.46	18.51	20.16
.....		1.31	
	100.00	100.00	100.00

Data of this kind might be almost indefinitely multiplied.[a]

The resinoids and fossil hydrocarbons are especially abundant in rown coals, both as visible masses and in a disseminated condition. rganic solvents, such as benzene, will extract matter of this kind rom lignite, but the substances thus obtained are not of definite composition. In some cases oily fluids exude from brown coal,[b] although stances of this kind are probably rare. Solid bodies are the rule. n extreme example of extractive matter in coal is that reported by atson Smith,[c] who, in a Japanese lignite, found 9.5 per cent of subance soluble in benzene.

In their behavior toward reagents the lignites are more akin to eat than to the Carboniferous coals. Like peat, they contain humic mpounds which are soluble in solutions of caustic alkalies. Acording to E. Fremy,[d] peat yields abundant "ulmic acid" to alkane solvents, xyloid lignite yields less, and compact lignite little or one at all. The bituminous coals and anthracite are insoluble in lkaline solutions. Occasionally these humic bodies are found in markable concentrations. The "paper coals" of Russia, for examle, contain layers of humic matter, which is soluble in ammonia.[e] n the brown coal of Falkenau, Bohemia, C. von John[f] found a ative humus acid, soluble in ammonia or sodium carbonate solution, which had approximately the composition $C_{46}H_{46}O_{25}$. Von ohn cites other examples reported by other observers. Furthermore, the pigment known as Cassel brown is a fossil humus from the 'ertiary near Cassel, Germany.[g]

Fremy found that lignite was also soluble in alkaline hypochlorites, 'hile the true coals were not. It was also strongly attacked by nitric cid, with conversion into a yellow resinous body, soluble in an cess of the reagent or in solutions of the alkalies. Bituminous coal

[a] See the great monograph by C. Zincken, Die Physiographie der Braunkohle, Hannover, 867; and its Ergänzung, published at Halle in 1871. In Grove and Thorpe's Chemical echnology, vol. 1, many analyses are given; and others are cited in F. Fischer's hemische Technologie der Brennstoffe, vol. 1, Braunschweig, 1897. E. F. Burchard, in roc. Sioux City (Iowa) Acad., vol. 1, p. 174, 1904, has reported data for some Nebraska gnites.

[b] See E. Donath, Zeitschr. anorg. Chemie, 1906, p. 657.

[c] Jour. Soc. Chem. Ind., 1891, p. 975.

[d] Compt. Rend., vol. 52, p. 114, 1861.

[e] See R. Zeiller, Bull. Soc. géol., 3d ser., vol. 12, p. 680, 1884.

[f] Verhandl. K.-k. geol. Reichsanstalt, 1891, p. 64.

[g] See a recent description by P. Malkomesius and R. Albert, Jour. prakt. Chemie, 2d r., vol. 70, p. 509, 1904.

and anthracite, on the other hand, were feebly attacked, anthracite in particular with extreme slowness. These coals, however, dissolved in mixtures of nitric and sulphuric acids, yielding solutions from which water precipitated a humus compound. Woody tissue, heated during several days to 200°, became comparable with lignite in its behavior toward reagents.

Since Fremy's time the action of nitric acid and other oxidizing agents upon coal has been studied by various investigators. E. Guignet,[a] for example, found that nitric acid acted upon coal with the formation of products more or less analogous to the nitrocelluloses, and similar observations were recorded by R. J. Friswell.[b] A committee of the British Association[c] also conducted some experiments upon the proximate constitution of coals. They not only studied the action of solvents to some extent, but also examined the action of hydrochloric acid and potassium chlorate upon coal. That powerful oxidizing mixture produced compounds which resembled the chlorinated derivatives of jute fiber. The work of the committee seems never to have been pushed to completion.

The researches thus briefly summarized, it will be observed, relate partly to lignite and partly to other coals. They suggest relations between the coals and vegetable fiber, but for several reasons they are inconclusive. The records are often inexplicit, and the experiments are not all strictly comparable. When nitric acid, for example, is employed as a test reagent, it should be under commensurable conditions, such as uniform fineness of subdivision on the part of the coal and equality of concentration on the side of the acid. Time and temperature also must be taken into account. A hot, strong acid, applied to a finely powdered coal, would act differently from a cold, weak acid on coarser material. To neglect of details like these some of the discordances in the records are probably due.

In recent years E. Donath and his associates[d] have studied one phase of the nitric acid reaction with much care. Dilute nitric acid, one part to nine of water, at a temperature of 70°, will attack lignite vigorously, but is without action upon bituminous coal. Even a brown-coal "anthracite," a product of contact metamorphism by an intrusion of phonolite, behaved like ordinary lignite toward nitric acid. From evidence of this kind Donath concludes that lignite and true coal are chemically unlike and of dissimilar origin. They behave differently toward reagents, and yield different products upon

[a] Compt. Rend., vol. 88, p. 590, 1879.

[b] Proc. Chem. Soc., vol. 8, p. 9, 1892. W. C. Anderson and J. Roberts (Jour. Soc. Chem. Ind., vol. 17, p. 1013, 1898) have also studied the action of nitric acid on coal, and made several analyses of the "coal acids" so obtained.

[c] Ann. Rept. Brit. Assoc., 1894, p. 246; idem, 1896, p. 340.

[d] Donath, Chem. Zeitung, 1905, p. 1027, and Zeitschr. anorg. Chemie, 1906, p. 657. Donath and H. Ditz, Oesterr. Zeitschr. Berg. u. Hüttenw., vol. 51, p. 310, 1903. Donath and F. Bräunlich, Chem. Zeitung, 1904, pp. 180, 953.

destructive distillation. Neither by time, according to Donath, nor by heat, can lignite be transformed into coal. Lignite, he thinks, is derived from materials rich in lignocellulose, as shown by the presence of humic compounds in it. The true coals, on the other hand, were formed from substances which were either free from woody fiber, or nearly so. In the formation of bituminous coal, which is often rich in nitrogen, the proteids of animal matter probably took part.

It would be premature, I think, to accept Donath's conclusions throughout, but his evidence, taken together with that of earlier investigators, shows distinct chemical differences between the lignites and the coals. In lignites the humic compounds are readily detected, but in coal they are less apparent. Nitric acid acts easily on lignite, but with much less vigor upon bituminous coal or anthracite. How far the latter substances are derivable from the former, however, is a separate question.

BITUMINOUS COAL.

In composition, at least empirically, the bituminous coals lie between the lignites and anthracite. To some extent they overlap the brown coals, so that it is not always easy to say where the one group ends and the other begins. The following analyses of bituminous coals, all of Carboniferous age, are taken from the reports of the fuel-testing plant of the United States Geological Survey. They are selected in order to show something of the recognized variations.[a]

First, there are the conventional proximate analyses:

Proximate analyses of bituminous coals.

A. Ehrenfeld, Pennsylvania. Bull. No. 290, p. 179.
B. Bruce, Pennsylvania. Idem, p. 184.
C. Vigo County, Indiana. Idem, p. 109.
D. Altoona, Iowa. Prof. Paper No. 48, p. 223.
E. Shawnee, Ohio. Bull. No. 290, p. 145.
F. Staunton, Illinois. Idem, p. 63.

	A.	B.	C.	D.	E.	F.
Moisture	3.51	2.61	9.55	4.52	9.90	13.72
Volatile matter	16.82	34.92	36.19	40.96	33.66	36.24
Fixed carbon	73.04	56.30	43.65	38.99	44.86	39.72
Ash	6.63	6.17	10.61	15.53	11.58	10.32
	100.00	100.00	100.00	100.00	100.00	100.00
Sulphur	.94	1.26	3.72	6.83	1.81	3.96

With one exception the volatilizable part of these coals is less in amount than the fixed carbon. With the lignites the reverse state-

[a] The high moisture of these coals is due to the fact that the samples were sealed up immediately after collection in the mines, and were not dried.

ment is generally true. The ultimate analyses of the same coals, recalculated to a water-, ash-, and sulphur-free basis, are as follows:

Ultimate analyses of bituminous coals.

	A.	B.	C.	D.	E.	F.
C	90.78	85.73	84.19	82.92	82.20	81.87
H	4.69	5.49	5.82	6.06	5.45	5.85
N	1.40	1.75	1.42	1.27	1.60	1.36
O	3.13	7.03	8.57	9.75	10.75	10.92
	100.00	100.00	100.00	100.00	100.00	100.00

The reciprocal variation of carbon and oxygen, the latter rising as the former falls, is here very well shown.

Even in a single mine the composition of the coal may vary within fairly wide limits. For example, F. Fischer[a] gives 24 comparable analyses of coal from the Unser Fritz mine, district of Arnsberg, Westphalia. From the table, in which the analyses are reduced to and ash- and sulphur-free standard, I select the following examples, which show the maximum and minimum proportion of each constituent. In the last column I give the average of the entire series:

Analyses of coal from Unser Fritz mine.

C	85.33	85.06	84.28	82.34	80.69	83.81
H	5.20	4.66	4.85	4.94	4.94	4.98
N	1.49	1.35	1.87	1.18	1.29	1.47
O	7.98	8.93	9.00	11.54	13.08	9.74
	100.00	100.00	100.00	100.00	100.00	100.00

Other variations, due to the peculiar character of certain coaly material, are illustrated by the following analyses:

Analyses of fossil plants and cannel coal.

A. Average of six analyses of fossil plants, from the coal beds of Commentry, France, by S. Meunier, in Fremy's Encyclopédie chimique, vol. 2 (Complément, pt. 1), p. 152. The plants were perfectly preserved as to structure, but entirely transformed into coal. The genera *Calamodendron, Cordaites, Lepidodendron, Psaronius, Ptychopteris*, and *Megaphyton* are represented in this average. The variations between them are small.

B. Analysis of Wigan cannel, by F. Vaux, Jour. Chem. Soc., vol. 1, p. 320, 1840.

C. Analysis of Tyneside cannel, by H. Taylor, Edinburgh New Phil. Jour., vol. 50, p. 145, 1851. All three analyses are here recalculated to the ash-free basis.

	A.	B.	C.
C	82.45	83.58	87.89
H	4.75	5.77	6.53
N	.43	2.21	2.08
O	12.37	8.44	3.50
	100.00	100.00	100.00

The suggestive feature of the foregoing trio is in the proportion of nitrogen. The fossil plants contain very little nitrogen; the cannels

[a] Zeitschr. angew. Chemie, p. 605, 1894. See also his Chemische Technologie der Brennstoffe, vol. 1, pp. 518–520.

are abnormally high. The inference is that plant remains have contributed but a small part of the nitrogen contained in coal, and that the main supply has come from other sources. The most obvious source is animal matter, and this was probably the source of the nitrogen in cannel. Newberry[a] long ago pointed out that fish remains are abundant in cannel coal, and he argues that the beds were laid down under water. Vegetable matter formed a carbonaceous paste, in which the fish remains became embedded and which consolidated to produce cannel coal.

For comparison with other varieties of coal, the subjoined averages will be useful. Moisture, sulphur, and ash are excluded from the table, except when otherwise specified.

Average analyses of bituminous coal.

A. Average of twenty analyses of bituminous coals from Pennsylvania, Maryland, Virginia, and West Virginia. Combined from data given in the reports of the fuel-testing plant of the United States Geological Survey.

B. Average of forty analyses of bituminous coals from Ohio, Indiana, Illinois, Iowa, and Missouri. Also from the above-named reports.

C. Average of fifteen analyses of Scotch coals, by W. D. Anderson and J. Roberts, Jour. Soc. Chem. Ind., vol. 17, p. 1013, 1898. Sulphur is included in the figure for oxygen.

D. Average of eighteen coals from Newcastle, twenty-eight from Lancashire, and seven from Derbyshire, England. Recalculated from averages cited by Fischer, in Chemische Technologie der Brennstoffe, vol. 1, p. 512.

	A.	B.	C.	D.
C	87.52	82.91	83.65	84.19
H	5.20	5.70	5.48	5.58
N	1.61	1.49	1.86	1.41
O	5.67	9.90	9.01	8.82
	100.00	100.00	100.00	100.00

The peculiar chemical differences between the bituminous coals and lignite were described in the preceding section of this chapter. Many coals, which are apparently bituminous, and in fact are bituminous so far as technical uses are concerned, are really lignitic; at least so far as can be judged from their origin. Their true character must be determined by researches like those of Fremy and Donath, but refined methods of investigation are yet to be devised.

ANTHRACITE.

In anthracite the transformation of vegetable matter into carbon approaches its limit. On one side of this class of coals we find the variety known as semianthracite; on the other they approximate to graphite. The technical analyses of anthracite show a large pro-

[a] Am. Jour. Sci., 2d ser., vol. 23, p. 212, 1854. J. Rofe (Geol. Mag., 1866, p. 208) has also called attention to the fish remains in Lancashire cannel. B. Renault (Bull. Soc. ind. min., 3d ser., vol. 14, p. 138) regards cannel as formed from the spores of cryptogams. No algæ are found in it, or very few.

portion of fixed carbon, with relatively little volatilizable matter—relation which appears in the following table:

Proximate analyses of anthracite.

A. Semianthracite, Coal Hill, Arkansas. From report of the coal-testing plant, Pro Paper U. S. Geol. Survey No. 48, p. 202, 1906.

B. Anthracite culm, Scranton, Pennsylvania. Idem, p. 245.

C. Lykens Valley, Pennsylvania.

D. Schuylkill coal, Pennsylvania.

E. Cameron coal, Pennsylvania. Analyses C, D, and E by A. S. McCreath, Rept Second Geol. Survey Pennsylvania, vol. MM. This volume contains many other proximat analyses of coals.[a]

	A.	B.	C.	D.	E.
Moisture	1.28	2.08	2.27	2.98	1.8
Volatile	12.82	7.27	8.83	3.38	6.1
Fixed carbon	73.69	74.32	78.83	87.13	86.7
Sulphur	.....	.....	.68	.66	.7
Ash	12.21	16.33	9.39	5.85	4.5
	100.00	100.00	100.00	100.00	100.0

[a] See also C. A. Ashburner, Trans. Am. Inst. Min. Eng., vol. 14, p. 706, 1875–76, fo a tabulated classification of Pennsylvania anthracites. A large number of proximat analyses are there cited. For analyses of Colorado anthracites see W. P. Headden, Proc. Colorado Sci. Soc., vol. 8, p. 257, 1907.

Ultimate analyses of anthracites are much less numerous than for the other varieties of coal. The subjoined table, however, is enough for present purposes. Ash, sulphur, and moisture are excluded.

Ultimate analyses of anthracite.

A. Semianthracite, Arkansas; the same as A in the preceding table.

B. Welsh anthracite, analysis by F. Vaux, Jour. Chem. Soc., vol. 1, p. 324, 1848.

C. From Scranton, Pennsylvania. Coal B of the preceding table.

D. From Mauch Chunk, Pennsylvania. Analysis by J. Percy, Quart. Jour. Geol. Soc., vol. 1, p. 204, 1845.

E. From Province of Hunan, China. Analysis by F. Haeussermann and W. Naschold. Zeitschr. angew. Chemie, 1894, p. 263. This paper contains twenty-eight analyses of Chinese coals, most of them anthracitic.

F. From the Bajewka, Ural. Analysis by Alexejeff, cited by Bertelsmann in an important memoir upon the nitrogen of coal, in Ahren's Sammlung chemischer und chemisch-technischer Vorträge, vol. 9, p. 339. A valuable table of coal analyses is there given.

G. Average of sixteen analyses of anthracite, compiled from various sources.

	A.	B.	C.	D.	E.	F.	G.
C	91.47	92.73	93.90	94.63	94.68	97.46	93.50
H	4.25	3.37	3.22	2.73	2.29	.61	2.81
N	1.64	.85	1.00	1.36	.76	.35	.97
O	2.64	3.05	1.88	1.28	2.27	1.58	2.72
	100.00	100.00	100.00	100.00	100.00	100.00	100.00

Anthracite, however, is not the extreme end of the coal series. There are pre-Carboniferous coals, which are found only in small quantities, and which approach still more closely to pure carbon. The following substances belong in this class, with the possible exception of the first example. The crude analyses are given first.

Analyses of anthraxolite, schungite, and graphitoid.

A. Anthraxolite, near Kingston, Canada. Analysis by W. H. Ellis, Chem. News, vol. 76, p. 186, 1897. Found in Lower Silurian limestone.

B. Anthraxolite, near Sudbury, Canada. Analysis by Ellis, loc. cit. Found in the Cambrian.[a]

C. Schungite, from Schunga, near Lake Onega, Russia. Mean of six analyses, reduced to anhydrous form, by A. Inostranzeff, Neues Jahrb. 1880, pt. 1, p. 97; see also the same journal for 1886, pt. 1, p. 92. Found in the Huronian.

D. Graphitoid, from the mica schist and phyllite of the Erzgebirge. Analysis by A. Sauer, Zeitschr. Deutsch. geol. Gesell., vol. 37, p. 441, 1885.

	A.	B.	C.	D.
C	90.25	94.92	98.11	24.855
H	4.16	.52	.43	.06
N	.52	1.04	.43	.....
S	.66	.31	.....	.....
O	3.69	1.69	.....	.....
H_2O	.....	.....	.....	1.01
Ash	.72	1.52	1.09	73.854
	100.00	100.00	100.06	99.779

[a] Ellis gives partial analyses of anthraxolites from three other localities. See also A. P. Coleman, Sixth Ann. Rept. Ontario Bur. Mines, 1897.

Rejecting ash, water, and sulphur, these analyses assume the following form, comparable with the analyses of other coaly substances:

Recalculated analyses of anthraxolite, schungite, and graphitoid.

	A.	B.	C.	D.
C	91.53	96.69	99.12	99.76
H	4.22	.53	.44	.24
N	.53	1.05	.44	.....
O	3.72	1.73	.....	.....
	100.00	100.00	100.00	100.00

These minerals, and many anthracites also, might be properly termed metamorphic coals. They can not, however, even in the extreme cases, be termed graphitic, for they consist mainly of amorphous carbon. Graphite is a crystalline mineral, and upon treatment with powerful oxidizing agents it can be transformed into a substance known as graphitic acid,[a] $C_{11}H_4O_5$. The amorphous carbons do not yield this derivative, and Inostranzeff failed to obtain it from schungite. The approach to graphite, therefore, is empirical only, and not constitutional—a conclusion which needs to be checked by a study of many other so-called "graphitic coals." That term may be applicable in some cases, but they are yet to be established.

[a] See B. C. Brodie, Liebig's Annalen, vol. 114, p. 6, 1860.

THE VARIATIONS OF COAL.

For comparison of all the fuels, starting with wood and endi with anthracite, the subjoined table has been compiled from tl data given in the preceding pages. In the case of wood the figu for nitrogen is the mean of the determinations by Chevandie Gottlieb, and Hawes.

Average composition of fuels.

	C.	H.	N.	O.
Wood	49.65	6.23	0.92	43.
Peat	55.44	6.28	1.72	35.
Lignite	72.95	5.24	1.31	20.
Bituminous coal	84.24	5.55	1.52	8.
Anthracite	93.50	2.81	.97	2.

This table may be restated in a different form, so as to show tl proportion of the other elements to 100 parts of carbon. It the appears as follows:

Comparative proportions of constituents of fuels.

	C.	H.	N.	O.
Wood	100	12.5	1.8	87
Peat	100	11.3	3.1	64
Lignite	100	7.2	1.8	28
Bituminous coal	100	6.6	1.8	10
Anthracite	100	3.0	1.3	2

A steady decrease in hydrogen and oxygen thus becomes apparen The data for nitrogen, however, are less conclusive, because of tl uncertainty in the analyses of wood. If Hawes's average for tl acrogen plants, 1.59 per cent of nitrogen, be taken, then its rati becomes 3.1, identical with the figure for peat, and a definite d crease follows. New analyses of wood, with reference especially t its nitrogen content, are much to be desired.

A closer scrutiny of the foregoing table reveals still another fac namely, that the proportional decrease in oxygen is greater than i the case of hydrogen. In cellulose, $C_6H_{10}O_5$, these two element exists in exactly the proportions required to form water. In woo the hydrogen is slightly in excess of that ratio (1:8), and the exce steadily increases until, in anthracite, it is proportionally very larg In wood the ratio is nearly 1:7; in anthracite, roughly, 1:1.

This progressive variation in the ultimate composition of th coals implies a corresponding variation in their proximate characte a class of changes to which attention has already been called. Eve the crudest analyses are conclusive in regard to one form of varia tion. Peat, ignited in a covered crucible, yields much volatile ma ter and relatively little fixed carbon. In lignite the fixed carbon i

higher, but commonly less than the volatile products. Bituminous coal is progressively richer in fixed carbon, while in anthracite the volatile portion has become exceedingly small. This particular variability is so characteristic that the ratio between fixed carbon and volatile matter has been adopted by some authorities as a basis for the classification of coals.[a] Such a method of classification has the merit of convenience, for it requires only proximate analyses, which are numerous and easily made, although it must be admitted that their accuracy is often questionable. Moreover, the nature of the volatile matter varies in different kinds of coal, a part of it being combustible, and a part consisting of water and other noncombustible products formed during the process of burning. In fact, the volatile matter is exceedingly complex, as is shown by a study of the substances formed when coal is distilled for the production of illuminating gas. The gas itself may contain hydrocarbons, free hydrogen, both oxides of carbon, nitrogen, and compounds of sulphur. Ammoniacal water solutions are also produced, together with coal tar; and in the latter a number of complex hydrocarbons are found, and also oxidized bodies such as phenol. In 20 analyses of coal gas, P. F. Frankland[b] found the following range of variations in the percentages of the principal constituents:

Variations in composition of coal gas.

CO_2	0 to 2.73
O_2	0 to 1.00
N_2	2.07 to 10.84
H_2	33.24 to 53.79
CO	2.46 to 7.14
CH_4	36.55 to 42.93

The other products of distillation, obviously, must have been equally variable. The destructive distillation of wood yields substances quite unlike those derived from coal; methyl alcohol, acetone, and acetic acid being conspicuous among them.[c]

On account of this distinction between the combustible and noncombustible portions of the distillates from coal, S. W. Parr[d] has proposed a technical classification of these fuels which differs essentially from the system above mentioned. His scheme is based upon the ratio between the total carbon and the carbon of the volatile matter, which latter is largely but not wholly combustible. He also takes into account the percentage of "inert volatile" matter, which

[a] See, for example, P. Frazer, Trans. Am. Inst. Min. Eng., vol. 6, p. 430, 1877–78, and C. A. Ashburner, idem, vol. 14, p. 706, 1885–86.

[b] Jour. Soc. Chem. Ind., vol. 3, p. 273, 1884.

[c] A good article on the distillation of wood is in Watts's Dict. of Applied Chem., vol. 3, p. 1026, 1893. The subject can not be discussed at length here.

[d] Bull. No. 3, Illinois Geol. Survey, 1906. Also Jour. Am. Chem. Soc., vol. 28, p. 1425, 1906.

seems to vary in a manner characteristic of the different groups coals. M. R. Campbell,[a] on the other hand, has argued in favor the ratio C:H, with which he has classified the analyses made at t fuel-testing plant. These classifications are chiefly of technologic significance, and their discussion falls outside the range of this wor

The most important variations in coal, however, are those whi were outlined under lignite. Passing from peat to anthracite the is a progressive diminution in the proportion of humus substanc and also in the solubility of the coals in various reagents. Tl necessary details to illustrate these variations have already be given and need no further repetition here.

THE GASES IN COAL.

Both peat and coal, the latter in all its varieties, contain occlud gases, often in large amount. In coal mines they sometimes esca in formidable volume, forming the so-called choke damp and fi damp of mining parlance. The choke damp consists of carbon dioxi or nitrogen or both together, the fire damp is principally methan

The development of these gases can be traced back to the earlie stages of coal formation, when marsh gas was produced, along wit carbon dioxide, in the process of vegetable decay. The evolution methane from swamps was mentioned in the preceding chapter, wit reference to its existence in petroleum and as natural gas. Its em nation from peat is another example of the same phenomenon, an is mentioned now for the reason that it was quantitatively studie by Websky.[b] In a single analysis of gas extracted from peat obtained the following percentages:

CO_2	2.97
CH_4	43.36
N_2	53.67
	100.00

The nitrogen from this gas is presumably a residue from the groun air, the oxygen of the latter having been consumed partly to for carbon dioxide and partly water.

The gases occluded by lignite, so far as our information now goe are of quite a different character. As analyzed by J. W. Thomas who obtained his material by heating lignite in vacuo to 50°, 100 and 200°, successively, they consist principally of carbon dioxide, wit subordinate carbon monoxide and nitrogen, and insignificant propo tions of oxygen and hydrocarbons. The following examples are suff cient to show the general nature of his analyses:

[a] Prof. Paper U. S. Geol. Survey No. 48, pp. 156–173, 1906. See also P. Frazer, Bu Am. Inst. Min. Eng., March, 1906.

[b] Jour. prakt. Chemie, vol. 92, p. 76, 1864.

[c] Jour. Chem. Soc., vol. 32, p. 146, 1877. See also Zitowitsch, Jour. prakt. Chemie, ser., vol. 6, p. 79, 1873, on gases from Bohemian lignites.

Analyses of gases from lignite.

A. Gas from Bohemian lignite, extracted at 100°.
B. Gas from Bovey Heathfield lignite at 50°; 100 grams of coal gave 56.1 cubic centimeters of gas.
C. Gas from the same coal at 100°, 59.9 cubic centimeters.
D. Steam coal. 147.4 cubic centimeters gas.
E. Gas evolved from sample D on heating to 200°.

	A.[a]	B.	C.	D.	E.
CO_2	96.41	87.25	89.53	96.05	86.30
CO	1.20	3.59	5.11	3.20	7.41
CH_4	.....	.....	.....	.....	3.34
Olefines	traces	.....	.....	.33	2.08
C_2H_2	.....	.....	.....	.....	.53
O_2	.32	.24	.33	.....	.....
N_2	2.17	8.92	5.03	.42	.34
	100.10	100.00	100.00	100.00	100.00

[a] The error in summation is probably due to an unidentifiable misprint in the original.

Marsh gas, it will be seen, only appears in the product of heating lignite to 200° after decomposition had begun. In these lignites, at least, marsh gas is not normally occluded, but it would be rash to say that all other lignites follow the same rule. It is desirable that many more lignites should be examined in order to see whether or not they exhibit the same peculiarity. The samples studied by Thomas may possibly be exceptional.

In another investigation Thomas[a] examined the gases extracted in vacuo at 100° from cannel coal and jet. The analyses are subjoined, with a statement of the volume of gas yielded by 100 grams of each sample.

Analyses of gases from cannel coal and jet.

A. Wigan cannel. 421.3 cubic centimeters gas.
B. Wigan cannel. 350.6 cubic centimeters gas.
C. Scotch cannel, Wilsontown. 16.8 cubic centimeters gas.
D. Scotch cannel, Lesmahago. 55.7 cubic centimeters gas.
E. Cannel shale, Lasswade, near Edinburgh. 55.7 cubic centimeters gas.
F. Whitby jet. 30.2 cubic centimeters gas.

	A.	B.	C.	D.	E.	F.
CO_2	6.44	9.05	53.94	84.55	68.75	10.93
CH_4	80.69	77.19	.....	.....	.....	.....
C_2H_6	4.75	7.80	.....	.....	2.67	.....
C_3H_8	.....	.....	.....	.91	.....	.....
C_4H_{10}	.....	.....	.....	.....	.....	86.90
N_2	8.12	5.96	46.06	14.54	28.58	2.17
	100.00	100.00	100.00	100.00	100.00	100.00

The variations here are most remarkable. Methane predominates in the gases from two cannels, carbon dioxide and nitrogen in the other three. In jet the proportion of butane is extraordinary, especially for the reason that jet is essentially a fossil wood, or, in other words, a lignite.

[a] Jour. Chem. Soc., vol. 30, p. 144, 1876.

The gases occluded by bituminous coal have been studied by sever chemists. E. von Meyer[a] investigated a number of German coal and also a series from the north of England. Several coals from th Newcastle region were studied by P. P. Bedson[b] and W. McConnell For Welsh coals there are data by J. W. Thomas.[d] In Thomas' memoir both bituminous coals and anthracite are included, and fro it I select the following analyses. The gases were extracted at 100 in vacuo, and in volumes which are referred to the uniform standar of 100 grams of coal.

Analyses of gases from bituminous and anthracite coal.

A. Bituminous coal. 55.9 cubic centimeters gas.
B. Bituminous coal. 39.7 cubic centimeters gas.
C. Bituminous coal. 55.1 cubic centimeters gas.
D. Steam coal. 147.4 cubic centimeters gas.
E. Steam coal. 194.8 cubic centimeters gas.
F. Anthracite. 600.6 cubic centimeters gas.
G. Anthracite. 555.5 cubic centimeters gas.

	A.	B.	C.	D.	E.	F.	G.
CO_2	36.42	9.43	5.44	18.90	5.04	14.72	2.
CH_4	.....	31.98	63.76	67.47	87.30	84.18	93.
O_2	.80	2.25	1.05	1.02	.33	.....	.....
N_2	62.78	56.34	29.75	12.61	7.33	1.10	4.
	100.00	100.00	100.00	100.00	100.00	100.00	100.

The gases obtained by Von Meyer from Saxon and Westphalia coals were similarly variable in composition. In some of them ethan was reported up to 23 per cent; and also hydrocarbons, in sma amount, of undetermined character. By weight the gases form onl a fraction, usually a small fraction of 1 per cent of any coal.

The variability thus shown may be easily misinterpreted. Th coals emit gases even in the mines, and the laboratory samples, there fore, do not represent the true character of the material under groun Something is lost in transit from the mine to the laboratory, and it amount is conditional upon the texture of the coal. A hard, compa anthracite retains much of its gaseous charge; a porous coal, on th other hand, will lose much. So we see that the bituminous coa contain, as a rule, less gas in the laboratory than the anthracite although the bituminous mines are the most seriously affected by fi damp. In the coal beds themselves the bituminous coals are riche in gaseous occlusions. McConnell, in the memoir previously cite also points out that in the Newcastle region the older and deeper coa contain the most methane, while in the younger seams carbon dioxi

[a] Jour. prakt. Chemie, 2d ser., vol. 5, pp. 144, 407, 1872; vol. 6, p. 389, 1873. Da reproduced in Percy's Metallurgy, vol. 1, p. 283, 1875.
[b] Trans. North of England Inst. Min. Mech. Eng., vol. 37, p. 245.
[c] Jour. Soc. Chem. Ind., vol. 13, p. 25, 1894.
[d] Jour. Chem. Soc., vol. 28, p. 793, 1876.

may predominate even to the exclusion of combustible gases. In his investigation of the Welsh coals, Thomas analyzed 14 samples of gases emitted from crevices or "blowers" in the mines, and found that they contained from 47.37 to 97.65 per cent of methane, with over 94 per cent in all but two of them. Other earlier analyses of colliery gases have told essentially the same story.[a] Methane is the principal gas of coal beds.

ARTIFICIAL COALS.

Various attempts have been made to prepare artificial coals, in the hope of gaining some information upon the genesis of the natural products. Two lines of research are represented in these efforts, but neither has yet led to any final conclusions.

In the first class of experiments it was sought to produce coals by pressure. W. Spring[b] subjected peat to a pressure of 6,000 atmospheres, and transformed it into a hard, black, brilliant solid which was outwardly indistinguishable from coal. On the other hand, R. Zeiller,[c] working with pressures of 2,000 to 6,000 kilograms to the square centimeter, found that peat and also the "ulmic acid" from the paper coals of Russia were merely compacted without change of chemical character. They retained their solubility in ammonia and showed no evidence of a true transformation into coal. Some experiments by Gümbel,[d] who subjected lignite to pressures as high as 20,000 atmospheres, showed that even under such conditions no serious changes were produced, and that the vegetable structure was in great measure preserved.

In the second class of experiments heat is used as the transforming agent. In the ordinary process of charcoal burning, wood is heated out of free access of air, decomposition ensues, volatile matter is expelled, and a form of amorphous carbon finally remains in the kiln. Violette,[e] who has studied this process with great care, found that when wood was heated nearly to 400° in a sealed tube, 78.5 per cent of it remained as a solid residue which had all the appearance of a fatty coal. In this case the volatile substances exerted a great pressure upon the contents of the tube, and a product very different from ordinary charcoal was formed. By heating wood under conditions which permitted the volatile matter to escape, he obtained a series of charcoals which varied in composition according to the temperature at which they were prepared. The experiments were

[a] See G. Bischof, Edinburgh New Phil. Jour., vol. 29, p. 309; vol. 30, p. 127, 1840. T. Graham, Mem. Chem. Soc., vol. 3, p. 7, 1845. Lyon Playfair, Mem. Geol. Survey Great Britain, vol. 1, p. 460, 1846. A recent paper on the gases in coal is by F. G. Trobridge, Jour. Soc. Chem. Ind., vol. 25, p. 1129, 1906.

[b] Bull. Acad. Belg., vol. 49, p. 367, 1880.

[c] Bull. Soc. geol., 3d ser., vol. 12, p. 680, 1884.

[d] Sitzungsb. Math. phys. Classe, K. bayer. Akad. Wiss., München, vol. 13, p. 141, 1883.

[e] Ann. chim. phys., 3d ser., vol. 32, p. 304, 1851.

conducted at temperatures ranging from 150° to the melting point of platinum, and his analyses of the products thus formed, 28 in all, show progressive changes, analogous to the changes observed in the passage from wood to anthracite. The charcoals, however, are not identical with coal, but differ from it both texturally and chemically. A finished charcoal is really the analogue of coke, being in fact the coke of wood; but in its preparation it is possible to trace, step by step, the breaking down of the original ligneous fiber. For that reason it is most desirable that the chemistry of charcoal burning should be studied much more in detail than it has been hitherto.

Violette's experiments with wood in sealed tubes were not the first of their kind. Early in the nineteenth century Sir James Hall obtained an artificial coal by heating wood in a closed cylinder of iron, and in 1850 or 1851 C. Cagniard-Latour [a] performed essentially the same experiment in tubes of glass. These earlier experiments, however, were merely qualitative, for the products obtained were not analyzed.

In 1879 Fremy [b] published an interesting series of observations, based upon experiments with carbohydrates other than cellulose, and upon the so-called "ulmic acid" from two sources. One example of ulmic acid was extracted from peat; the other was prepared from a constituent of woody tissue to which Fremy gave the name vasculose. The substances were all heated in sealed glass tubes to temperatures which seem to have been near 300° and yielded residues which behaved in all respects like coal. When heated to redness, they gave off water, gas, and tar and left behind a remainder of coke. These artificial coals had the following composition:

Composition of artificial coals.

	C.	H.	O.
Coal from sugar	66.84	4.78	28.43
Coal from starch	68.48	4.68	26.84
Coal from gum arabic	78.78	5.00	16.22
Coal from ulmic acid, peat	76.06	4.99	18.95
Coal from ulmic acid, vasculose	78.78	5.31	18.26

The similarity of these products to natural coals, especially in the last three examples, is evident.

The most recent experiments of this order seem to be those of S. Stein.[c] He heated wood with water in sealed tubes, but at different temperatures, and partially analyzed the coaly substances thus obtained. His results are briefly as follows:

[a] Compt. Rend., vol. 32, p. 295, 1851.
[b] Idem, vol. 88, p. 1048, 1879.
[c] Chem. Centralbl., 1901, pt. 2, p. 950. From a Hungarian original which I have not seen.

Experiments to obtain coaly products from wood.

Temperature.	Time of heating.	C.	H.
	Hours.	*Per cent.*	*Per cent.*
245	9	64.3	5.4
250	6	69.2	5.1
255	6	70.3	5.2
265	5	72.8	4.7
275	6	74.0	4.5
280	5	77.6	4.1
290	5	81.3	3.8

Here we have a series of products, ranging in composition from a substance near peat to one more closely resembling coal. Only, it must be observed, the hydrogen toward the end of the series is lower than in coals showing the same percentage of carbon. The parallelism between the artificial and the natural substances is therefore not quite complete. The natural inference from this conclusion is that agencies other than heat and pressure have taken part in the carbonization of vegetable matter, and these may have been microbian in character. The function of heat is to decompose the organic complexes; that of pressure is to retard the change and to prevent the escape of the volatile products; the combined effect must vary with variations in the intensity of the two agencies. If an exact adjustment of heat and pressure could be arranged, it is possible that a true artificial coal might be prepared, but this is a mere supposition.

From one point of view the experiments with sealed tubes appear to be irrelevant. The change of woody fiber to peat or lignite is initiated at low temperatures and under nearly atmospheric pressure, conditions quite unlike those which either Violette or Stein adopted. As the rotted material becomes buried the pressure upon it increases; but, except where igneous intrusions have operated, there is nothing to show that especially high temperatures have been at work. The element of time, however, must be considered. The natural processes are carried on slowly; and it may be that the laboratory methods merely accelerate them. So far, then, the experiments are pertinent but inconclusive. They certainly do not cover all the ground. All that can be said is that moderate temperatures and pressures, operating for a long time, may produce results resembling those which are brought about hurriedly in the laboratory.

In order to account for what we might call the anthragenetic process, various hypotheses have been framed. J. F. Hofmann,[a] for example, has used the analogy offered by the spontaneous combustion of grain, flax, and hay, and suggested that something of the same sort may happen in the buried materials from which coal is

[a] Zeitschr. angew. Chemie, p. 821, 1902.

formed. In that phenomenon heat is generated by fermentatio and when actual inflammation is prevented for lack of air a parti carbonization may occur. In cases of this kind heat is generat locally and an imperfect combustion occurs. Hofmann's suggestio are interesting, but, so far as the formation of coal is concerned, tl evidence in their favor is very incomplete.

How far micro-organisms are active in the formation of coal doubtful. They abound in the stagnant waters of swamps, ar certainly have much to do with the earlier stages of vegetable deca They start the process, but at the same time they generate antisept compounds which limit their activity. Peat, not far below the su face, is distinctly antiseptic and inimical to microbian life. Nev theless, a number of authorities have argued strongly in favor these organisms as principal agents in anthragenesis. B. Renaul has found their remains in lignite and coal in significant abundan and variety.

THE CONSTITUTION OF COAL.

In the preceding pages, under other captions, I have cited a goc deal of evidence relative to the substances found in coal or fro which coal has been derived. Its vegetable origin is clear and nee no further discussion now; its present constitution is more difficu to determine.

The question of constitution presents itself under two aspects, tl one structural the other chemical. On the one side microscopic ev dence is available, and it is seen that coal contains vegetable remair micro-organisms, resinoid bodies, and so on. In some coals spores spore cells are abundant;[b] in others, as shown by Renault, remains algæ are found. The lignites are obviously derived from woody fibe and, in short, in many cases the proximate origin of the coals is n difficult to determine. Their structure, microscopic or macroscopi tells a pretty clear story.

On the chemical side the problems are much less simple. Tl proximate constituents of coal are most imperfectly known and tl little knowledge we have is mainly qualitative. The necessary i

[a] Bull. Soc. ind. min., 3d ser., vol. 13, p. 865, 1899; vol. 14, p. 1, 1900. See also Lemière, idem, 4th ser., vol. 4, pp. 851, 1248, 1905, and vol. 6, p. 273, 1906. Also Compt. Rend. VIII Cong. géol. internat., p. 502, 1900. Lemière regards the soluble diastatic ferments, derived from living vegetation, as also operative in the process vegetable decay.

[b] See J. W. Dawson, Am. Jour. Sci., 3d ser., vol 1, p. 256, 1871. E. Orton (idem, v 24, p. 171, 1882) states that spore cases are abundant in the "sub-Carboniferous" roc of Ohio, and are also found in the Devonian. On the microscopic structure of t natural hydrocarbons, resins, and coals, see Fischer and Rust, Zeitschr. Kryst. Min., v 7, p. 209, 1882. The important memoirs by Bertrand and Renault have already be referred to.

vestigations are difficult, the methods are not well formulated, and the available data are scattered and fragmentary. To what extent free carbon exists in coals is still an open question. It is probably absent from lignite and abundant in the extreme anthracites; but its quantitative determination can not be effected by any known analytical process.

There are two distinct lines of attack upon the problem in question. First, by means of solvents, to extract certain constituents of coal and to identify them. Some of these constituents, which are commonly small in amount, can be dissolved by gasoline, ether, benzene, chloroform, alcohol, and other organic solvents. The extractive matter thus obtained is, unfortunately, not simple, but seems to contain a mixture of substances whose nature is yet to be determined. By handling large quantities of material these bodies may be obtained in sufficient abundance for more complete investigation, and their separation into definite fractions is by no means hopeless.[a]

Alkaline solvents, such as caustic soda, caustic potash, and ammonia, dissolve, as we have already seen, humic substances from peat and brown coal, but not from the older carbons. These substances are indefinite, but in time their nature may be determined, and their correlation with the ligneous carbohydrates ought then to become possible. If, however, as is supposed, some coals are derived from gelatinous algæ, the problem becomes more complex. The chemical constitution of those forms of vegetation is still very obscure. Up to the present time the mistake has been made, by chemists engaged in the study of coal, of assuming that the celluloses are the chief starting points—an assumption which is not unqualifiedly true. Carbons of animal origin also require attention. Much preliminary work of this kind remains to be done.

The direct separation of its constituents from coal is, however, possible only to a very limited extent. Hence the second line of attack, the conversion of these bodies into recognizable derivatives, is also essential. Not only do we need more experiments along the line developed by Donath, whose distinction between the lignites and the true coals has already been discussed, but much more needs to be done in the study of oxidation products, chlorine derivatives, etc. For example, in addition to the researches upon the nitrocompounds derivable from coal and the chlorination experiments reported to the

[a] On this subject see the authorities already cited. Also P. Siepmann, Preuss. Zeitschr. Berg-, Hütten-, u. Sal.-Wesen, vol. 39, p. 27, 1891. F. Muck (Die Chemie der Steinkohle, Leipzig, 1891) gives a good summary of earlier investigations by Dondorff, Reinsch, etc. An interesting memoir by W. C. Anderson (Proc. Phil. Soc. Glasgow, vol. 29, p. 72, 1897) also describes a number of important experiments.

British Association, there are investigations like that conducted b L. Schinnerer and T. Morawsky.[a] These chemists fused lignite wit caustic soda, and by distillation of the melt obtained pyrocatechi which is a benzene derivative The true coals, so far as examine did not yield this compound, which seems to have been produce from the resinoid constituents of the lignite. By experiments of th order the compounds existing in coal can be correlated with othe substances of known constitution, and some at least of the problem which confront us may be solved. The future chemistry of coal wi be shaped by a study of its immediate constitution and not by th multiplication of empirical analyses.

[a] Ber. Deutsch. chem. Gesell., vol. 5, p. 185, 1872.

INDEX.

A. Page.

Aar, River, analysis of water 77
Abbot, H. L. *See* Humphreys and Abbott.
Abert Lake, analysis of water 125, 136
Abich, H., analyses of spinel 280
Abilena well, analysis 146
Abilene artesian well, analysis 141
Absorption, of substances by soils 424–426
Acanthite 560
Acetylene 629
Acetylene series 622
Acheson, E. G., artificial graphite 266
d'Achiardi, A., origin of borates 198
d'Achiardi, G., minerals in marble 537, 539
origin of borates 198
Ackroyd, W., atmospheric transport of salt 48, 130
relative abundance of elements 26
Acmite 314–316
Actinolite 318–319
Actinolite-magnetite schist 526
Adamellose 382
Adamite 580
Adams, B. F., cited 42
Adams, F. D., allanite and epidote 341
analyses by 71, 144
melilite rocks 334
monmouthite 376
Adams, F. D., and Harrington, B. J., hastingsite 322
Adams, F. D., and Lawson, A. C., scapolite diorite 338, 515
Adams, G. I., concentration of petroleum 640
gypsum 185
native sulphur 495
zinc deposits 583
Adler, River, analysis of water 77
Adobe soil 432–434
Adriatic Sea 94
Adschi-Darja. *See* Karaboghaz.
Aegirite 314–316
Aenigmatite 323
Agate 294
Aguilarite 562
Aguilera, J. G., stibbnite 597
Aigner, A., polyhalite 181
Aikenite 569, 570
Air, dissolved, composition of 402
See also Atmosphere.

Page.

Aisinmann, ——, origin of petroleum 634
Aitken, J., atmospheric dust 48
Åkermannite 333, 334
Akerose 370, 371, 374, 383, 384
Alaskose 366, 367, 368
Albanose 376
Albert, R. *See* Malkomesius and Albert.
Albertite 624, 625
Albite 300–304
Albite mosaic 512
Alexandrolite 604
Alexejeff, W., dopplerite 647
Alferric minerals 358, 359
Algæ, as limestone makers 471, 472, 476
as source of bitumens 637, 638
magnesium carbonate in 485
Algæ, siliceous 439
Algodonite 567
Alipite 603
Alkali, in soils 189–195
Allanite 340–342, 617, 618
Allemontite 595
Allen, E. T., aluminum hydroxide 422
analyses by 185
native iron 270
synthesis of diopside 314
of quartz 296
See also Day and Allen.
Allen, E. T., and White, W. P., fusion of lime silicate 240
wollastonite 313, 537
Allen, E. T., Wright, F. E., and Clement, J. K., magnesium silicate 239, 240, 312, 320, 325
Allen, O. D., analyses by 119, 123, 159, 188, 189, 190, 191
Alloclasite 599
Allopalladium 607
Allophane 527
Alma well, analysis cited 144
Almandite 334–337
Aloisi, P., spinel rocks 281
Altai, Lake, analysis of water 131, 135
saline deposit 187
Altaite 584
Aluminum, distribution 13
in sea water 92
Alum shale 467
Alums 211, 221

Page.
Alunite 211
Alunogen 211
Alway, F. J., and Gortner, R. A., water analysis 126
Amalgam 555
Amazon River, analyses of water 73, 83
Amber 644
Amblygonite 593
Amesite 331
Ammiolite 573
Ammonia, in rainfall 46
in sea water 91, 92
Amphiboles 318–323
Amphibolite 508–510
Analcite 304–306, 316
Analcite rocks 306, 307, 378, 379
Anamorphism, zone of 502
Anatase 288–290
Andalusite 343–344, 527, 528
Andalusite rocks 530
Anderlini, F. *See* Nasini, R.
Anderson, ——, cited 129
Anderson, W., cited 124, 156
Anderson, W. C., experiments on coal 667
Anderson, W. C., and Roberts, J., coal 652, 655
Anderson, W. S., solubility of calcium carbonate 98
Andesine 300
Andesite 383, 412
Andorite 562, 585
Andose 380, 383, 384, 385, 388, 389
Andouard, A., phosphate rock 445
Andradite 335–337
Andrew, A. R., phosphate rock 451
Andrews, T., native iron 267
Androscoggin River, analysis of water 62
Androussof, N., reduction of sulphates by bacteria 116, 438
Anger, F. A., shale 469
Anglesite 587, 588
Anhydrite 178, 180, 181, 182, 183, 199
Animikite 560
Ankerite 484, 490
Annabergite 602
Anorthite 300–304, 538
Anorthoclase 300–304
Anorthosite 390
Ansdell, G. *See* Dewar and Ansdell.
Ansel, H., iron ores 494
Anthophyllite 318, 319
Anthracite 655–658
Anthraxolite 657
Antimony, distribution 13
ores of 595–598
Ants, geological work of 410
d'Aoust, V., oolite 471
Apatite 292, 293, 442–451
Aphrosiderite 331
Aphthitalite 178
Aplite 366
Apophyllite 265, 350
Aragonite 351, 473–475
Aral, Sea of, analysis of water 128, 135
Arctic Ocean, analyses of water 95
Arctowski, H., synthesis of hematite 285
Ardennite 613
Arfvedsonite 322, 323
Argall, P., distribution of nickel 598
Argentina, rivers of 74
Argentite 560
Argon, distribution 14, 38
in spring waters 140
Argyrodite 562
Arias, Rio de, analysis of water 74
Arkansas Hot Springs, analysis of water 152
Arkansas River, analysis of water 59, 69
flow of 68
Arkansose 376
Arkite 376
Aromatic hydrocarbons 623
Arrhenius, S. A., carbon dioxide and climate 44
nature of earth's interior 52
volcanic explosions 232, 233
Arsandaux, ——, analysis by 445
Arsenic, distribution 14
in sea water 92
ores of 595–598
Arsenolite 598
Arsenopyrite 595, 596, 597
Arva-Polhora, analysis of water 143
Arve River, analysis of water 76
Arzruni, A., cassiterite as a furnace product 291, 591
cuprite 571
hematite 285
Asbestos 318
Asbolite 456, 602
Aschan, O., iron ores 453
waters of Finland 83
Ascharite 180, 202
Ashburner, C. A., anthracite 656
classification of coals 659
Ashley, G. H., antimony deposits 597
formation of peat 645, 648
See also Blatchley and Ashley.
Askwith, W. R., antimony mines 597
Aspasiolite 340
Asphalt 624–627
Assiniboine River, analysis of water 71
Aston, E., analysis by 522
Astrakanite 178
Atacamite 571
Atherton, T. W. T., gold sulphide 554
Atlantic Ocean, analyses of water 95
Atlin, spring near, analysis 149
Atmosphere, composition of 38–44
mass of 22, 49
the primitive 49–52
Atopite 598
Atterberg, A., alteration of topaz 342
Attwood, G., decomposition of diabase 413
Aubin, E., cited 39
Audoynaud, A., ammonia in sea-water 92
Auerbach, F., cited 159
Augé, ——, bauxite 419, 420
Augite 316–318

Page.
Augite, melting point 240
Austin, W. L., nickel ores 602
Autunite 613
Auvergnose 384, 385, 388, 389
Avalite 604
Awarulite 269, 270
Azohumic acid 409, 646
Azurite 572

B.

Babingtonite 317
Bäckström, H., fusion of micas 330, 376
on Soret's principle 255
synthesis of acmite 315
Bacon, R. F., analyses cited 156
Bacteria as agents in rock decomposition 409, 410
Bad Elster, analysis of water from 151
Baddeckite 326
Baddeleyite 617
Baer, W., analyses of wood 643
Baerwald, C., pseudomorphs of chrysocolla 571
Baeumler, ——, nickel in shale 598
Baikal, Lake, analysis of water 81
Bailey, E. H. S., analyses by 146, 621
gypsum 185
Bailey, E. H. S., and Case, E. C., analyses by 141, 184
Bailey, E. H. S., and Franklin, E. C., water analyses 67
Bailey, E. H. S., and Porter, F. B., analysis by 141
Bailey, G. E., California borates 198
soda niter 206
Bain, H. F., fluorite 500
lead and zinc deposits 583
Baker, A. L., bromine in bittern 186
synthesis of livingstonite 575
Baker, H. B., cited 45
Bakerite 200
Balatonsee, analysis of water 80
Baldacci, L., sulphur deposits 497
Balland, ——, cited 59
Ballo, M., water analysis 79
Ballston waters, analyses 144, 145
Baltic sea, analysis of water 95
Baltimoriase 390
Baltimorose 390
Bamberger, E., fichtelite 648
Bandose 382, 388
Bandrowsky, F. X., nitrogen in petroleum 624
Baragwanath, W., platinum 611
Barber, W. B. *See* Nutter and Barber.
Barbour, E. H., and Torrey, J., siliceous oolite 466
Barcenite 573, 597
Barchatow bitter lake, analysis of water 132, 135
Baret, C. *See* Lacroix and Baret.
Barite 106, 461, 498–500
Barium, distribution 14, 498
in sea water 92

Page.
Barkevikite 322, 323
Barlow, A. E., nickel deposits 600, 602
Barnard, H. E., analysis of water 62
Barr, W. M., analysis cited 155
Barr, W. M., Spaulding, H. S., and Van Winkle, W., analyses of water 64, 66, 67, 68, 69
Barrandite 443, 446
Barrois, C., chloritoid rocks 529
Barschall, H. *See* Van't. Hoff and Barschall.
Barus, C., sedimentation 429
thermo-couple 238, 239
water glass 243, 244, 504, 551
Barus, C., and Iddings, J. P., electric conductivity of molten rocks 245
Barysilite 590
Basalt 385–387
fusibility 242, 245, 246
Basanite 373
Basch, E. E., syngenite and polyhalite 181
Basic rocks 393
Baskerville, C., analyses by 281, 604
thorium 617
vanadium in peat 612
See also Corse and Baskerville.
Bassett, H., cited 119
Bastite 313
Baubigny, H., synthesis of sphalerite 578
Bauer, K., fusion of mineral mixtures 252
Bauer, M., laterite 418
nephelite in schists 308
Bauerman, H., and Foster, C. Le Neve, celestite 498
Baumert, M., composition of dissolved air 45, 402
Baur, E., synthesis of quartz and tridymite 296, 303
Bauxite 417–424
Bayldonite 590
Bayley, W. S., actinolite-magnetite schist 319
graywacke 462
iron ores 284
talcose schist 538
Beam, W., water analyses 82
Bear River, analysis of water 120
Beaumont, É. de, distribution of the elements 13
Beauvallet, P., vanadium in clay 612
Béchamp, A., equilibrium in mineral waters 159
hydrogen sulphide and calcium carbonate 496
Bechi, E., origin of borates 197, 198
distribution of vanadium 612
Bechilite 196
Beck, R., cassiterite in granite 291
native copper 566
native silver 559
nickel deposits 601

Page.
Beck, R., ore deposits 541, 548
primary gold 271
tin ores 593
Beck, R., and Fircks, W. von, copper ores 568
stibnite 597
Becke, F., amphibolite 510
changes of volume in metamorphism 506
eclogite 517
hornblende pseudomorphs 321, 326
saussurite gabbro 513
scapolite rock 515
See also Stěp and Becke.
Becker, A., fusion of hornblende 320
fusion of limestone 477
Becker, G. F., arsenic and antimony in sinter 596, 597
borates 196
Borax Lake 124
constitution of amphiboles and pyroxenes 321
epidote from chlorite 515
eutectic classification of rocks 355
fractional crystallization in magmas 257
formation of native sulphur 495
geological significance of wollastonite 313
glaucophane rocks 323, 509
gold in sinter 556
heavy metals in granite 543
magmatic differentiation 255
mercury ores 573, 575, 576, 577
minerals in sandstone 462
nature of magmatic solutions 245
serpentine 348, 520, 521
solvents of gold 557
Steamboat Springs 145, 162
waters of Sulphur Bank 154
Becker, G. F., and Melville, W. H., mercury in sinter 577
Becquerel, A. C., synthesis of dioptase 572
syntheses of lead ores 585, 586, 587, 589
Becquerel, H., and Moissan, H., free fluorine in fluorite 274
Bedson, P. P., barium in water 498
gases in coal 662
Beegerite 586
Beemerose 374
Beerbachose 384, 388
Beilstein, F., and Wiegand, E., ozokerite 625
Beisk, Lake, analyses of water 131, 135
saline deposits 187
Beistle, C. P. *See* Frear and Beistle 431
Belcherose 390
Bell, J. B., platiniferous quartz 610
Bell, J. M. *See* Cameron and Bell.
Bell, R., corrosion of limestone 479
nickel deposits 600
Bellucci, G., chlorides in rain 47
Bělohoubek, A., water analysis 77

Page.
Bemmelen, J. M. van, absorbent power of hydrogels 425
absorption of potassium by clays 107
aluminum hydroxides 422
hydroxides of iron 453
tropical soils 423
zeolitic silicates in soil 166
Bemmelen, J. M. van, Hoitsema, C., and Klobbie, E. A., bog iron ore 452, 454
Bemmelen, J. M. van, and Klobbie, E. A., iron hydroxides 453
Benedicks, C., sericitic rocks 511
Bennett, J. *See* Haworth and Bennett.
Benzene series 623
Beraunite 443
Beresovite 588
Bergeat, A., boric acid from Vulcano 196
occurrence of titanium minerals 290
ore deposits 541
volcanic sublimates 221
Bergenose 393
Berglund, E., bromine in sea water 94
Bergsträsser, ——, cited 128
Bergt, ——, analysis by 466
Bertels, G. A., origin of petroleum 635
Berthelot, M., gases in native iron 234
origin of petroleum 631
synthetic hydrocarbons 629
Berthier, ——, synthesis of olivine 324
Berthierine 494
Berthierite 595
Bertrand, C. E., and Renault, B., origin of bitumen 637
Bertrandite 348
Berwerth, F., constitution of hornblende 321
Beryl 347, 348
gases from 225
Beryllium. *See* Glucinum.
Berylionite 348
Berzelianite 567
Berzelium 617
Best, A. *See* Coates and Best.
Beudantite 590
Beyer, S. W., clays 431
Beyerinck, M. W., cited 87
Beyrichite 599
Beyschlag, F., cobalt ores 598
See also Monke and Beyschlag.
Bickell, C., analysis by 162
Biddle, H. C., precipitation of copper 566
Biddle, H. J., nickel ores 602
Bieberite 602
Biggs, J. W. H. *See* Clowes, F.
Bigstone Lake, analysis of water 66
Biljo Lake, analysis of water 131, 137
Binder, G. A., solubility of cinnabar 575
Bindheimite 590
Binney, E. W., and Talbot, J. H., petroleum in peat 637
Biotite 327–331

Page.
Biquard, R. *See* Moureu, C.
Bird, M., analysis by 141
Bischof, G., analyses by 79, 80, 132, 428
cements in sandstone 460
dolomitization 486
gases in coal 663
loess 434
origin of salt beds 175
reduction of silver sulphide 559
solvents of gold 557
sphalerite in sinter 579
zinc carbonate 581
Bischofite 179, 180
Bismite 598
Bismuth, distribution 14
ores of 595–598
Bismuthinite 595, 596
Bismutite 598
Bismutosmaltite 599
Bismutosphærite 598
Bistineau; brine, analysis of 141
Bitter Lake, analysis of water 131, 135
Bitterns 174, 185, 186
Bitumen 624–627
Bituminous coal 653–655
Bizio, G., lithium in sea water 92
Black Lake (California), analysis of water 124, 136
Black Lake (Roumania) 133
Black Sea, analysis of water 95
Blackwell, G. G., bauxite 420
Blake, J. F., glaucophane schist 509
Blake, R. F., cited 42
Blake, W. P., bauxite 421
gilsonite and wurtzilite 625
primary gold 553
Terlingua mines 573
tin deposits 594
tungsten ores 607
zinc deposits 583, 584
Blanc, G. A., radioactivity 260
Blanckenhorn, M. *See* Semper and Blanckenhorn.
Blatchley, W. S., clays 431
petroleum 639
Blatchley, W. S., and Ashley, G. H., marl 472
Bleicher, ——, iron ores 494
Blende 578–584
Bloedite 178, 179
Blue Lick Spring, analysis 142
Blue River, analysis of water 68
Blum and Leddin, Carlsbad sprüdelstein 160
Bobierre, composition of rainfall 48
Bobierrite 444
Bode, G., cited 60
Bodenbender, G., wolframite 607
Bödlander, G., analysis by 492
melilite in Portland cement 333
sedimentation 429
Bödtker, gytje 438
Boeke, H. E., sintering of calcium carbonate 478
Böttcher, W. *See* Krämer and Böttcher.

Page.
Boettker, E., Norwegian pyrite 273
Boghead mineral 637
Bog-iron ore 409, 452–454, 490
Boleite 588
Bolley, P., origin of borates 198
Bolton, H. C., solubility of minerals in organic acids 408, 409
Bolton, W. von, tantalum 617
Boltonite 325
Boltwood, B. B., radioactivity of waters 152
Bone, W. A., and Jerdan, D. S., synthetic hydrocarbons 629
Bonneville, Lake 118–121
Bonney, G. T., glaucophane eclogite 509
matrix of diamond 265
serpentine 519
Boracite 180, 202
Borates 180, 195–205
Borax 196, 198, 199, 200, 201, 202
Borax Lake, analysis of water 124, 136
borax from 196
Bordas, F. *See* Girard, C.
Borgström, L. H., hackmannite 309
Boric acid 196
Borickite 443
Borne, G. von dem, radioactivity of granite 260
Bornite 273, 567, 568, 569
Bornträger, H., analyses of peat 647
Borocalcite 196
Borodowsky, W., orpiment and realgar 596
Boron, distribution 14
in sea water 92
nitride 197
sulphide 198
Boronatrocalcite 201
Bothamley, C. H., analysis by 143
Boudonard, O., melting point of silica 240
Boulangerite 585, 586
Bouquet, J., analyses by 149, 161
spring deposits 160, 161
Bouquet de la Grye, A., cited 96
Bourcart, E., Swiss lakes 76
Bourgeois, L., cassiterite in scoria 591
formation of perofskite 287
fusion of garnet 335
synthesis of crocoite 589
of hydrocerussite 587
of iolite 339
of meionite 338
of melilite and gehlenite 334
of smithsonite 581
of spessartite 335
of titanite 288
Bourgeois, L., and Traube, H., synthesis of dolomite 483
Bourgoin and Chastaing, analysis by 154
Bournonite 569
Boussingault, J. B., analyses by 156, 186
carbon dioxide from volcanoes 42
Dead Sea 129
jet 649

Page.
Boussingault, J. B., manganese nodules 193
nitrate earth 205
origin of acid in volcanic waters 157
Boussingaultite 196
Boutwell, J. M., carnotite 615
Bownocker, J. A., petroleum 639
Bow River, analysis of water 72
Brackebuschite 590
Brackett, R. N., analyses by 68, 412, 466
Brackett, R. N., and Williams, J. F., rectorite 527
Braconnier, ——, analysis by 146
Bradley, F. H., unakite 516
Bräunlich, F. *See* Donath and Bräunlich.
Bragard. *See* Fernandez and Bragard.
Brand, A., artificial breithauptite 599
Brandenbourg, R., water analysis 76
Branner, J. C., antimony deposits 597
bacterial decomposition of rocks 410
bauxite 421
clays 431
flow of Arkansas River 68
geological work of ants 410
magnesia in coral reef 487
novaculite 464
phosphorite 449
sandstone reefs 460
tallow clays 583
thermal disintegration of rocks 401
zinc deposits 583
Branner, J. C., and Newsom, J. F., phosphorite 449
Brauner, B., gold telluride 556
synthesis of hessite 562
Brauns, R., alteration of olivine 326
conchite 473
gold in a cement 556
origin of salite 314
theory of micas 331
webskyite 348
Bravo, J. J., vanadium ores 613
Brazier, J. S., analyses by 436, 437
Brazos River, analyses of water 69
Breese, C. M. *See* Failyer and Breese.
Breitenlohner, J. J., on the Elbe 78
Breithauptite 599
Breunnerite 351, 490
Brewer, W. H., sedimentation 429
Brewsterite 350
Briegleb, H., synthesis of apatite 292
Brines, natural 141
Brinsmade, R. B., cerussite deposit 586
Brochantite 571, 572
Brock, R.W., gold in igneous rocks 271, 553
platinum 611
Brodie, B. C., graphitic acid 657
Brögger, W. C., alteration of acmite to analcite 316
alteration of analcite 307
of arfvedsonite and barkevikite 323
of eläeolite 309
classification of igneous rocks 358
Page.
Brögger, W. C., composition of barkevikite 322
formula of ænigmatite 323
gibbsite and diaspore 422
magmatic differentiation 245, 254
nepheline syenites 376
nordenskiöldine 591
occurrences of fluorite 274
of zircon 292
spreustein 311
sulphides in pegmatite 273
Brögger, W. C., and Bäckstrom, H., the garnet group 309, 335
Bröggerite 614
Bromine, distribution 14
in bittern 186
Bromly, A. H., tin deposits 593
Bromyrite 564
Brongniardite 562, 585
Bronze, minerals formed on 568, 571, 572
Bronzite 311
Brookite 288–290
Brooks, A. H., tin deposits 594
Brooks, W. K., abundance of life in ocean 115
Brown, A. P., pyrite and marcasite 273
Brown, B. E., water analyses 70, 102
Brown, C. R. *See* Judd and Brown.
Brown, L. *See* Meadows and Brown.
Brown, L. P., phosphorite 449
Browne, D. H., nickel deposits 600
Brucite 484, 538
Brugnatelli, L., titanolivine 324
Bruhns, W., synthesis of corundum 275
synthesis of hematite 285
of ilmenite 286
of quartz and tridymite 296
Brumell, H. P. H., petroleum 639
Brun, A., fusibility of basalt 242
melting points of minerals 239, 240, 241
synthesis of corundum 275
of zoisite 340
volcanic gases 231, 233
Brunlechner, A., formation of iron ores 491
Brunswick well, analysis 142
Brush, G. J., pyroxene in slag 314
Brush, G. J. and Dana, E. S., alteration of spodumene 315
eucryptite 309
Brushite 444, 445
Buchanan, J., section of nitrate deposit 207
Buchanan, J. Y., density of sea water 96
manganese nodules 103
marine mud 438
oceanic carbonic acid 113
Buchrucker, L., babingtonite in slags 318
Bücking, H., occurrence of iolite 339, 340
Buckley, E. R., clays 431
Buckley, E. R., and Buehler, H. A., zinc deposits 583
Buehler, H. A. *See* Buckley and Buehler.

Page.
Bujor, P., cited 132
Bülüktü-Kul, analysis of water 132, 135
Bunsen, R. W., composition of dissolved air 45, 402
fundamental magmas 254
gas analysis 111
gases in rock salt 224
oxygen of the atmosphere 39
volcanic gases 213
Bunsenite 602
Burchard, E. F., lignite 651
Burton, C. V., artificial diamond 264
Bush, E. R., nickel deposits 601
Busz, K., analyses by 418
corundum 276
Buttgenbach, G., Argentine borates 202
Byasson, H., origin of petroleum 631
Byerlite 627
Byerly, J. H. *See* Mabery and Byerly.
Bygdén, A. eutectics 249, 356
Byske-elf, analysis of water 81
Bytownite 300

C.

Caballero, G. de J., cobalt in Mexico 598
ramirite 613
Cabrerite 602
Cache la Poudre River, analyses of water 58
Cacoxenite 443
Cadell, H. M., cited, on Stassfurt salts 176
Cadmium, distribution 14
ores of 577–579
Cady, H. P., and McFarland, D. F., helium in natural gas 621
Caesium, distribution 14
in sea water 92
Cagniard-Latour, artificial coal 664
Cahaba River, analysis of water 63
Calamine 580, 583
Calaverite 555
Calb, G. *See* Jannasch and Calb.
Calcareous sinter 159, 160, 471
Calcioferrite 443
Calciovolborthite 612
Calcite 351, 473–475
enclosing sand 459
Calcium, distribution 14
Calcium carbonate, circulation of 100
proportions on ocean floor 101
solubility of 98, 99
Calculation of rock analyses 397–399
Calderon, C. S., Chaves, D. F., and Pulgar, P. del, glauconite 440
Caledonite 588
Caliche 206, 207
California geysers 156
Californite 337
Calker, F. J. P. van, pseudogaylussite 123
Callainite 443
Calomel 573
Cameron, F. K., water analyses 70, 120
Cameron, F. K., and Bell, J. M., solubilities 183
Cameron, F. K., and Hurst, L. F., solubility of calcium phosphate 442, 443
Cameron, F. K., and Seidell, A., solubility of calcium phosphate 442, 443
Campbell, H. D. *See* Howe, J. L.
Campbell, M. R., borate deposits 198, 199, 200, 201
classification of coals 660
Campbell, W., and Knight, C. W., cobalt ores 602
nickel deposits 601
Campbell, W. D., pseudomorph of gold 557
Camptonite 384
Camptonose 384, 385, 388, 389
Canadase 389
Cancrinite 309–311
Canfieldite 562
Cannel coal 654, 655, 661
Caracolite 587
Carbides, metallic 230
Carbon, distribution 15
Carbon dioxide in the atmosphere 41–44
Carbonates in sea water 98, 99, 100
Carbonates, alkaline 189–195
origin of 165, 166
Carbonic acid, oceanic 112, 115, 116
Carbonyls, metallic 269
Carborundum 266
Carles, P., barium and sulphates in natural water 160
fluorine in shells of mollusks 91
in spring waters 149
Carlsbad Sprudel water, analysis 151
Carminite 590
Carnallite 179, 180, 181
Carnelley, T., on periodic law 35
solubility of copper 565
Carnot, A., fluorine in phosphates 446, 447
fluorine in sea water 91
minervite 445
phosphate rock 442
syntheses of stibnite and bismuthinite 596
water analysis 132
Carnotite 615, 616
Carolinium 617
Caron, H. *See* Deville and Caron.
Carpenter, W. L., oceanic carbonic acid 116, 475
Carrollite 567, 599
Carstone 463
Caryinite 590
Casares, J., fluorine in spring water 149
Case, E. C. *See* Bailey and Case.
Case, W. H., zinc deposits 583
Casoria, E., palmerite 445
volcanic sublimates 221
Caspian Sea 127, 128, 135
Cassel brown 651
Casseliase 391

Page.
Casselose 387
Cassiterite 290–291, 591–595
Castorina, G. T., radioactivity of lava 259
Catapleiite 617
Catharinet, J., copper ores 568, 569
gold in pegmatite 553
sperrylite in pegmatite 611
Cathrein, A., alterations of garnet 336, 337
chloritoid rock 529
epidotization 515
leucoxene 287
occurrence of chloritoid 330
pseudomorphs after gehlenite 334
after scapolite 339
saussurite 513
titaniferous magnetite 286
Catlett, C., analyses by 479, 555
See also Clarke and Catlett.
Cayeux, L., chalk 474
galze 464
glauconite 440, 442
glauconitic iron ore 453
phosphatic nodules 104
soils 431
Cecilose 330
Cedar River, analysis of water 70
Celadonite 440–441
Celestite 178, 199, 497, 498
Cellulose 642, 643
Celsian 300
Cementation, belt of 502
Cements in sandstone 459–461
Centeno, J., analyses by 156
Cerargyrite 564
Cerite 617
Cerium, distribution 15
sources of 617, 618
Cerussite 586, 587
Cervantite 598
Chabazite 349
Chabrié, ——, Algerian saltpeter 205
Chalcanthite 571
Chalcedony 294, 295, 465
Chalcocite 567, 568, 569
Chalcophanite 580
Chalcophyllite 570
Chalcopyrite 567, 568, 569
Chalcostibite 569, 570
Chalk 470, 474, 477
Chalmers, R., peat 648
Chalmersite 567
Chamberlin, R. T., gases from rocks 232
Chamberlin, T. C., influence of oceanic carbonates on climate 115
loess 433
planetesimal hypothesis 51, 52, 108
zinc ores 582, 583
Chamberlin, T. C., and Salisbury, R. D., volcanism 232–233
Chamosite 331, 494
Champlain, Lake, analysis of water 61
Champlainiase 393
Chancourtois, E. de, metals in earth's interior 269
Chancourtois, E. de, water analysis 130
Chandler, C. F., analyses by 61, 62, 144
Chaper, M., diamonds in pegmatite 265
Chaplin Lake 126
Charante, G. M. von, analysis of water 452
Charcoal 663–665
Charcoal, fossil 649
Charitschkoff, K., synthetic hydrocarbons 629
waters accompanying naphtha 636
Chariton, A. G., nickel ores 598
Chariton, H. W., analysis by 379
Chastaing, ——. *See* Bourgoin, ——.
Chatard, T. M., analyses by 57, 120, 121, 123, 124, 125, 190, 191, 317, 390, 391, 463, 468, 479, 492, 531, 604
natural soda 192
origin of corundum 278
tallow clay 583
Chateau, ——, Algerian phosphates 448
Chaves, D. F. *See* Calderon, C. S., etc.
Chazal, P. E., phosphate rock 449
Chélif, River, analyses of water 59
Cheltenham waters, analysis 145, 146
Chelú, A., sediment of the Nile 429
water of the Nile 82
Chemical denudation 87, 88, 89
Chenevixite 571
Cherrydale mineral water 154
Chert 464–467
Chester, A. H., on waters of New Jersey 63
Chester, F. D., epidotization 515
Chevallier, A., cited 96
Chevandier, E., analyses of wood 643
Chiastolite schist 530
Chicago drainage canal 84, 85
Chichen-Kanab, Lake, analysis of water 126, 136
Chilenite 560
Chiviatite 585
Chloanthite 599, 601
Chlorides in rainfall 47
Chlorine, distribution 15
in atmosphere 47
in potable waters 47
in sea water, origin of 107, 108, 109
Chlorites 331, 332
Chloritization 517, 518
Chloritoid 327, 330, 529, 531
Chloritoid-phyllite 530
Chlorophyllite 340
Chloropite 518
Chlorothionite 221
Chondrodite 520
Chotose 376
Christoballite 295
Christy, S. B., synthesis of cinnabar 574
Chromic iron ore. *See* Chromite.
Chromite 279, 281, 282, 604, 605, 609
Chromium, distribution 15

Page.
Chromium, ores of 603–605
Chrompicotite 281
Chrustschoff, K., artificial diamond 263
synthesis of hornblende 320
of mica 328
of quartz and feldspar 302
of quartz and tridymite 295, 296
of zircon 291
Chrysocolla 571, 572
Chrysolite 324
Chuard, E., alteration of bronze 568
Church, A. H., silicification of coral 439, 465
Cimolite 417, 527
Cincinnati artesian well, analysis 142
Cinnabar 573, 574, 575, 597
Ciplyte 446
Claesson, C., dopplerite 647
Clapp, F. G., limestones 478
Claraz, G. *See* Heusser and Claraz.
Clark, T. E., fichtelite 648
Clark, W. B., greensand 441
Clarke, F. W., alteration of iolite 340
analyses by 57, 120, 122, 142, 150, 391, 479, 555, 603
average composition of igneous rocks 24–27
brucite-serpentine 348, 520–521
constitutional formulæ 518
constitution of amphiboles 321
of pyroxenes 318
evolution of the elements 12
formula of cancrinite 309
glauconite and greenalite 441, 493
roscoelite 326
solubility of minerals 405
theory of chlorites 331
Clarke, F. W., and Catlett, C., nickel ore 601, 611
Clarke, F. W., and Darton, N. H., iron mica 326
Clarke, F. W., and Diller, J. S., alteration of topaz 342
nickel silicate 602
Clarke, F. W., and Schneider, E. A., calcination of talc 349
formation of spinel 280
micas and vermiculites 331, 332
Clarke, F. W., and Steiger, G., ammonium-analcite and leucite 314
vesuvianite 337
Claudetite 598
Claus, C., phosphatic sandstone 461
Clausthalite 584
Claypole, E. W., tin deposits 594
Clays 430–432
dehydration of 526–530
plasticity of 425, 426
Clays, oceanic 101, 107, 436, 437, 438
Clear Lake, analysis of hot spring near 154
analysis of water 70
Clement, J. K. *See* Allen, E. T.
Clements, J. M., iron ores 284

Page.
Clermont, P. de, and Frommel, J., solubility of sulphides 544, 545
Cleveite 614
Clinochlore 331, 332
Clinoclasite 571
Clinohedrite 580
Clintonite 327
Cloëz, S., hydrocarbons in iron 628
Clouet, J., synthesis of chromite 604
Clough, C. T., and Pollard, W., occurrence of olivine 325
Clowes, F., barytic deposits 498
barytic sandstones 461
Clowes, F., and Biggs, J. W. H., solubility of oxygen in sea water 110
Coal 642–668
Coates, C. E., and Best, A., petroleum 622
Cobalt, distribution 15
in ashes of sea weeds 93
ores of 598–603
Cobaltite 599, 601
Cochenhausen, E. von, water analysis 119
Codington, E. W., phosphate rock 450
Cohen, E., matrix of diamond 264
salt lake in Transvaal 133
Cohen, E., and Raken, M., solubility of calcium carbonate 99
Cohn, F., travertine 471
Cold Spring Creek, analysis of water 70
Cole, G. P. J., bauxite 420
Coleman, A. P., anthraxolite 657
corundum-nepheline syenite 277
heronite 307
nickel deposits 600
Colemanite 198, 200, 201
Collet, L. W., phosphatic nodules 104
Collet, L. W., and Lee, G. W., glauconite 441
Collier, A. J., tin deposits 594
Collier, P., native platinum 608
Collins, H. F., mercury ores 573
Collins, J. H., nickel deposits 601
tin ores 592
Collophanite 444
Collot, L., distribution of barium and strontium 498
Collyrite 527
Colomba, L., alteration of glaucophane 323
Colorado River (Argentina), analysis of water 74
Colorado River (Arizona), analysis of water 69
flow of 70
Coloradoite 573
Columbite 594, 616
Columbium, distribution 15
sources 616, 617
Colvocoresses, G. M., cobalt ores 602
Comanducci, E., copper and cobalt in volcanic ash 543

Page.
Conchite 473
Conichalcite 571
Connarite 603
Conneautsville well, analysis 144
Consanguinity of rocks 253
Contamination of river waters 84, 85, 86, 90
Convection in magmas 257
Cook, E. H., cited 43
Cook, G. H., clays 431
greensand marl 441
marl 472
native iron 267
Cooke, J. P., vermiculites 331
Cookeite 326
Cookose 389
Coolgardite 555
Coomará-Swámy, A. K., Ceylonese graphite 266
corundum 276
minerals in limestone 539
Cooper, A. S., origin of petroleum 637
Copal 644
Copiapo, Rio, analysis of water 74
Copper, distribution 15
in sea water 93
ores of 564–572
Coppock, J. B., cited 95
Coquand, H., antimony ores 597, 598
bauxite 419
borates 198
itabirite 525
Coquina 476
Coral 476
silicification of 439, 465
Coral mud and sand 436
Coral rock 476, 485–488
Cordierite 339, 340
Cornet, F. L., phosphatic chalk 448
Cornet, J. *See* Renard and Cornet.
Cornish, V., and Kendall, P. F., calcite and aragonite in shells 474
Cornu, F., acid reactions of minerals 403
color of salt 185
hibschite 345
rock-forming apophyllite 350
tests for calcite and dolomite 485
Corongamite, Lake, analysis of water 133, 134
Corse, M. B., and Baskerville, C., analysis by 441
Corstorphine, G. S., matrix of diamond 265
Cortese, E., hot springs of Venezuela 196
Cortlandtite 390, 391
Cortlandtose 391
Corundophilite 331
Corundum 274–279, 537
Corundum rocks 277, 278, 393
Corynite 599
Cosalite 562, 585
Cossa, A., synthesis of scheelite 606
tellurium in sulphur 220
volcanic sublimates 221
Cossyrite 323
Costachescu, N., gases in salt 185
Coste, E., origin of petroleum 633
Cotunnite 587
Covellite 567, 568, 569
Cowen, J. L., arsenic mine 597
Cox, E. T., antimony ores 598
phosphate rock 450
Craig, A. W., and Wilsmore, N. T. M., water analysis 133
Cramer, E., volatility of silica 223
Cransac, analysis of water from 154
Craw, J. W., analysis by 155
Crawley, J. T., and Duncan, R. A., absorption of potassium by soils 166
Credner, H., native copper 565
Crednerite 571
Crocidolite 322, 323
Crocoite 588, 589
Cronstedtite 331, 494
Crook, A. R., molybdenite 606
Crook, T., and Jones, B. M., geikielite 287
Crookes, Sir W., artificial diamond 264
Crookesite 567
Crosby, W. O., coloration of clay 432
Crosnier, L., crystallized sands 460
Cross, W., analcite basalt 306
analcite in phonolite 378
epidote 515
garnet in rhyolite 336
phlogopite in wyomingite 330
quartz-alunite and quartz-diaspore rocks 421
sandstone dikes 463
topaz in rhyolite 342
See also Iddings and Cross.
Cross, W., and Hillebrand, W. F., cryolite 274
Cross, Iddings, Pirsson, and Washington, quantitative classification 357–365
Crossite 322
Croton River, analysis of water 62
Cruzy well, analyses 146
Cryolite 274
Cryophyllite 326, 329
Cryptomorphite 203
Crystallization, fractional, in magmas 257
Cubanite 567
Cumberland River, analysis of water 66, 83
Cumberlandite 394
Cumenge, E. *See* Friedel and Cumenge.
Cumengeite 587
Cummingtonite 319
Cundell, J. T., and Hutchinson, A., zincite 580
Cunningham, J. A., order of deposition of minerals 252
Cuprite 571
Cuprobismutite 570
Cuprodescloizite 590
Cuprolodargyrite 564

Page.
Cuprotungstite 606
Currie, J., cited, on Stassfurt salts 176
Curry, J. E., water analyses 68
Curtis, J. S., gold and silver in quartz porphyry 543
origin of lead ores 590
Cusack, R., melting points of minerals 239, 240
Cushman, A. S., plasticity of clays 426
solubility of minerals 405
Custerose 391
Cyanite. *See* Kyanite.
Cyanchroite 221
Cylindrite 586, 591
Cymatolite 315
Cyrtolite 618

D.

Dacite 381, 382
Dahms, P., analysis by 508
Dale, T. N., slate 469
Dall, W. H., coquina 476
Dall, W. H., and Harris, G. D., Florida phosphates 444
Dallas, mineral spring near, analysis 148
Dalmer, K., metamorphosis of phyllite 332, 344, 528
Daly, R. A., magmatic stoping 256
pre-Cambrian ocean 97, 108
the fundamental magma 25
Damour, A. A., analysis by 162
native platinum 608
predazzite 489
titanolivine 324
Damourite 326
Dana, J. D., dolomitization 486
gypsum and salt 183
serpentine 520
Dana, E. S., thinolite 123
See also Brush and Dana.
Dana, E. S., and Penfield, S. L., lead silicate 590
Danalite 580
Dannemorite 319
Danube River, analysis of silt 429
analyses of water 79, 83
Daphnite 331
Darapsky, L., analyses of caliche 207
Chilean borates 201
Chilean nitrates 206
Darapskite 206, 208
Darton, N. H., Florida phosphates 444
See also Clarke and Darton.
Dathe, E., scapolite rocks 515
Daubrée, A., alteration of bronze 568
arsenic in sea water 92
arsenic and antimony in basalt 543
associations of platinum 609
calcination of serpentine 348
ferrous chloride in native iron 109
formation of galena 585
of hyalite and zeolites at Plombières 166
of olivine 324

Page.
Daubrée, A., fossil charcoal 649
origin of cassiterite 593
of native iron 269
sea water and volcanism 231, 233
solubility of orthoclase 303, 403
synthesis of apatite 292
of brookite 289
of cassiterite 290, 591
of diopside 314
of enstatite 311
of hematite 284
of quartz 295
of topaz 342
of zinc ores 580, 581
zeolites at Plombières 350
Daubrée, A., and Meunier, S., native iron 268
Daubréeite 598
Daubréelite 603
David, T. W. E., glendonite 123
matrix of diamond 265
Davidson, W. B. M., phosphate rocks 444
Davies, D. C., Welsh phosphates 448
Daviesite 587
Davis, C. A., marl 472
Davison, C., loess 433
Davison, J. M., platinum, etc., in meteorites 609
Dawson, H. M. *See* Van't Hoff, Kenrick, and Dawson.
Dawson, J. W., origin of gypsum 203, 495
peat 648
spore cases in coal 666
Dawsonite 422
Day, A. L., melting points of minerals 239, 240, 241, 243
Day, A. L., and Shepherd, E. S., akermannite silicate 333
formation of quartz and tridymite 297
lime silicates 239, 248
phase rule 250
volatility of quartz 223
Day, A. L., and Allen, E. T., fusion of feldspars 240
sublimation of feldspars 223
syntheses of feldspars 300–302
Day, D. T., filtration of petroleum 640
phosphate rock 450
platinum 609
Day, D. T., and Richards, R. H., platiniferous sands 609
Day, W. C., artificial asphalt 630
gilsonite 625
pitch coal 625, 626
Dead Sea 128–130, 135
Death Gulch, water from 161
De Benneville, J. S., potash in beryl 347
Debray, H., synthesis of apatite 292
synthesis of pyromorphite 590
of scheelite 606
of silver halides 564
See also Deville and Debray.
Dechen, H. von, cerussite sinter 587
Decomposition of rocks 401–458
Dedolomitization 538

Page.
De Groot, H., California borates 198, 199
De Gouvenain, ——, fluorine in Vichy water 149
Delaware River (Kansas), analysis of water 68
Delaware River (N. J.), analyses of water 63
Delebecque, A., and Duparc, L., French lakes 76
Delessite 331
Delkeskamp, R., barium in natural waters 160, 461, 498
bauxite 420
vadose and juvenile carbonic acid 169
Delvauxite 612
Demarçay, E., vanadium 612
Demel, W., dopplerite 647
Dennis, W. D., cited 201
Denudation, chemical 87, 88, 89
Denver, spring near, analysis 146
Derby, O. A., Brazilian diamonds 265
Brazilian topaz 342
disintegration of rocks 407
gold on limonite 556
manganese ore 456
novaculite 464
occurrence of monazite and xenotime 293, 294
Derbylite 598
Desaulesite 603
Des Cloizeaux, A., formation of anorthite 301
nickel ores 600
Descloizite 580, 590
Deville, C. Sainte-Claire, fumaroles of Vesuvius 213
volcanic gases 214, 215
volcanic sublimates 221
Deville, C. Sainte-Claire, and Leblanc, F., boric fumaroles 198
Deville, H. Sainte-Claire, synthesis of cassiterite 290, 591
synthesis of dolomite 480
of hematite 284
of magnetite 283
of willemite 581
of zeolites 350
titanium and vanadium in bauxite 423, 612
topaz 342
water analyses 76, 77
Deville, H. Sainte-Claire, and Caron, H., synthesis of apatite 292
synthesis of cassiterite 291, 591
of gahnite 581
of pyromorphite 589
of rutile 289
of staurolite (?) 344
of zircon 291
Deville, H. Sainte-Claire, and Debray, H., native platinum 608
Deville, H., synthesis of cinnabar 574
Deville, H. Sainte-Claire, and Troost, L., occlusion of gases by glass 226
synthesis of greenockite and wurtzite 578
Deville, H. Sainte-Claire, and Wöhler F., boron nitride 197
Dewar, J., cited 41
Dewar, J., and Ansdell, G., gases in meteorites 234
Deweylite 349
De Wilde, P., gold in sea water 93
origin of petroleum 634
Diabantite 331
Diabase 387–388, 412, 413
Diallage 314, 508
Diamond 262–265
Diaphorite 562, 585
Diaspore 418, 419, 421, 422
Diatom ooze 101, 436
Diatoms, as sources of petroleum 638
Dick, A. B., minerals in sand 427
Dickson, C., formation of barite 500
Dickson, C. W., nickel deposits 601
platinum ores 611
Dickson, E. *See* Holland and Dickson.
Dieffenbach, O., gold on siderite 556
Diersche, M., origin of graphite 266
Dietze, A., water analysis 74
Dietzeite 207, 604
Dieulafait, L., ammonia in sea water 92
bitumen in shale 635
boric acid in natural waters 153
Chilean nitrates 208
copper in sea water 93
lithium in sea water 92
manganese in sea water 93
manganese nodules 103
origin of borates 204
precipitation of iron ores 490
serpentine 521
thermochemistry of iron and manganese 457, 458
vanadium 612
zinc and copper in rocks 544
zinc in limestone 582
in sea water 93
Diller, J. S., alteration of pyrope 337
loess 433
melilite and gehlenite in slags 333
occurrence of perofskite 287
priceite 200
quartz basalt 299
sandstones 462, 463
See also Clarke and Diller.
Diopside 314
melting point 240
Dioptase 572
Diorite 383, 384, 412, 413
Dipyre 338
Dissociation in magmas 395
Ditte, A., metals in the atmosphere 48
origin of vanadates 613
synthesis of apatite 292

Page.
Ditte, A., synthesis of cassiterite 291, 591, 592
synthesis of cinnabar 574
of greenockite 579
Dittmar, W., analyses of dissolved air 111, 112, 113
analyses of ocean water 94
oceanic salts 23
water of Hayes River 71
Dittmarite 444
Ditroite 376
Dittrich, M., decomposition of rocks 411, 425
relations between spring waters and rocks 168
Ditz, H. *See* Donath and Ditz.
Divers, E., and Shimidzu, T., tellurium in sulphur 220
Dodge, J. A., analyses of water 64, 65, 70
Doelter, C., alteration of andalusite 344
constitution of pyroxene 318
formation of augite 317
of anorthite 301
of magnetite 283
of melilite 334
of spinel 280, 281
fusibility of rocks 242
fusion of clinochlore 332
of epidote 340
of garnet 335
of glaucophane 323
of micas 330
of tourmaline 347
gehlenite in limestone 537
magmatic dissociation 246
melting points of minerals 239, 240
solubility of cassiterite 592
of minerals 290, 405, 545, 596
solvent of gold 557
stability fields of minerals 250, 253
synthesis of acmite 315
of bournonite 570
of cinnabar 574
of covellite and chalcopyrite 568
of feldspar 302
of galena 585
of hornblende 320
of jamesonite 586
of leucite 305
of meionite 338
of mica 328, 329
of nephelite and kalliophilite 308
of olivine 325
of pyrite and pyrrhotite 272
of sulphosalts 563
of wollastonite 313
of zeolites 350
volcanic explosions 232
Doelter, C., and Hoernes, R., dolomitization 487
Doelter, C., and Hussak, E., formation of anorthite 301
formation of melilite 334
of spinel 281
Doelter, C., and Hussak, E., fusion of garnet 335
fusion of mineral mixtures 255
of vesuvianite 337
Doering, ——, analysis by 189
cited 126
Doherty, W. M., manganese nodules 455
Dole, R. B., and Roberts, M. G., analyses of waters 61, 62, 63, 66
Dolerophanite 221
Dolomite 351, 480–490
Domeykite 567
Domoshakovo, Lake, analysis of water 131, 135
saline deposits 187
Don, J. R., distribution of gold 554
gold in sea water 93
solvent of gold 557
Donath, E., action of nitric acid on coal 652
resinoids in lignite 651
Donath, E., and Bräunlich, F., reactions of lignite 652
Donath, E., and Ditz, H., reactions of lignite 652
Dopplerite 647, 648
Doss, B., anatase pseudomorphs 288
artificial hematite 285
pseudobrookite 287
sand in gypsum 460
synthesis of rutile and anatase 289
Doughty Springs 160
Douglasite 179, 180
Drasche, R. von, eclogite 516
Drevermann, A., syntheses of lead ores 589
Drown, T. M., chlorine maps 47
Duboin, A., synthesis of kalliophilite 308
synthesis of leucite 305
Dubois, E., atmospheric transport of salt 48
circulation of calcium carbonate 100
ratio of sodium to chlorine in rivers 108
Du Bois, G. C., laterite 418
Ducatte, F., sulphosalts of copper 570
sulphosalts of lead 586
Ducloux, E. H., cited 94
Dudley, W. L., vivianite 443
Duffield, S. P., analysis cited 141
Dufrenite 443
Dufrenoysite 585, 586
Dumas, J. B., origin of boric acid 198
synthesis of argentite 560
Dumble, E. T., grahamite 626
iron ores 494
Dumont, J., decomposition of potassium carbonate by clay 425
Dumortierite 345, 346
Duncan, R. A. *See* Crawley, J. T.
Dundasite 586
Dunin-Wasowicz and Horowitz, J., analysis by 145
Dunite 390, 391
Dunn, W. H., analysis of salt 184

Page.
Dunnington, F. P., deposition of manganese 458
titanium in clays 20
Dunose 391
Du Ponteil, C., analysis by 156
Duparc, L., pisolite 473
Uralian platinum 609
See also Delebecque, A.
Duparc, L., and Hornung, T., uralitization 319, 507
Durand-Claye, L., cited 95
Durocher, J., copper sulphide 567
liquation in magmas 257
synthesis of argentite 560
of cinnabar 574
of dolomite 480
of galena 584
of greenockite and sphalerite 578
of pyrite 272
of stibnite and bismuthinite 596
of sulphosalts 562
the fundamental magmas 254
Dust, atmospheric 48
Dutoit, A. L., matrix of diamond 265
Dutton, C. E., radioactivity and volcanism 259
Dwina, River, analysis of water 81
Dyscrasite 560
Dysprosium 15

E.

Eakins, L. G., analyses by 146, 280, 317, 367, 374, 383, 384, 385, 390, 391, 434, 468, 479, 489, 530
fluorine in fossil bone 447
xanthitane 288
Eakle, A. S., lawsonite 345
East Saginaw, brine, analysis of 141
Ebelmen, J. J., synthesis of beryl 347
synthesis of bunsenite 602
of chromite 604
of enstatite 311
of forsterite 324
of gahnite 580
of magnetite 283
of perofskite 287
of rutile 289
Ecdemite 590
Eckel, E. C., gypsum 185
limestone and cement 478
phosphorite 449
slate 469
See also Hayes and Eckel.
Eclogite 265, 516, 517
Edenite 319
Edgar and Mariner, analysis of water 66
Edingtonite 350
Eger River, analyses of water 77, 78
Egleston, T., solvents of gold 557
Eglestonite 573
Ehrlich, F. *See* Kolkwitz, R.
Eisenhuth, K., analysis by 492
Elæolite 307–309
Elæolite syenite 374, 412
Elaterite 624
Elbe River, analyses of water 78
Elbow River, analysis of water 72
Eldridge, G. H., asphalt 625, 627
Florida phosphates 450
Electrum 555
Elements, distribution 13–21
nature 12, 13
periodic classification 33–36
relative abundance 21–33
table of 13
Ellis, E. E., zinc deposits 583
Ellis, W. H., anthraxolite 657
Ells, R. W., manjak 626
Elton Lake, analysis of water 130, 135
Embolite 564
Emerson, B. K., amphibolite 510
andalusite and sillimanite 528
emery 278
serpentine 520
Emery 278, 424
Emmons, S. F., fluorite 500
loess 433
ores of Leadville 590
platinum 611
secondary enrichment 552
serpentine 520
silver in eruptive rocks 543
zinc ores 583
Emplectite 569, 570
Enargite 570
Endemann, H., asphalt 627
Endlichite 589
Engelhardt, F. E., analysis by 141
Engler, C., artificial petroleum 630
origin of petroleum 634, 635, 639
Engler, C., and Lehmann, T., artificial petroleum 630
Enstatite 311–313
melting point 240
Epiboulangerite 585
Epichlorite 331
Epidosite 516
Epidote 340, 341
Epidote rocks 515, 516
Epidotization 515, 516
Epigenite 570
Epistilbite 350
Epsomite 178, 179
Erbium 15
Erdmann, ——, water analysis 130
Erdmann, H., nitrogen in minerals 225
Erhard, T., melting points of minerals 238
Erie, Lake, analysis of water 61
Erinite 570
Erionite 350
Erofeef, M., and Latschinoff, P., diamonds in meteorite 264
Erwin, R. W., cited 46
Erythrite 602
Erythrosiderite 221
Essexose 373, 386
Etard, A., and Olivier, L., reduction of sulphates by microbes 496
Ettinger, ——. *See* Franck and Ettinger.

Page.
Eucairite 562
Eucryptite 307, 309
Euctolite 386
Eudialyte 617
Europium 16
Eutectics 247–250
Euxenite 616
Evansite 443
Evans, F. W., and McCreary, P. L., water analysis 70
Evans, J. R., analysis of water 64, 68
Evans, J. W., analcite in monchiquite 306
quantitative classification 365
Evans, N. N., analysis by 534
Eve, A. E., radio activity 260
Ewald, ——, analysis by 161
Ewing, A. L., limestone erosion 480
Excelsior Spring, analysis 149

F.

Fahlunite 340
Failyer, G. H. *See* Schreiner and Failyer.
Failyer, G. H., and Breese, C. M., nitrogen compounds in rain 46
Fairbanks, H. W., analcite-diabase 307
tin deposits 594
Fairchild, H. L., planetesimal hypothesis 51, 108
Fairhaven Springs, analysis 150
Famatinite 570
Farrington, O. C., formula of iolite 339
Farup, P. *See* Van't Hoff and Farup.
Faujasite 350
Fayalite 323–325, 357
Feather River, analysis of water 70
Feldspars 300–304
alterations of 510–517
melting points 240, 241
sublimation of 223
Femic minerals 359
Fennel, A. C. *See* Judge, J. F.
Fenneman, N. M., petroleum 622
Fergusonite 618
Fermor, L. L., manganese ores in laterite 419
Fernandez and Bragard, analyses by 499
Fernekes, G., precipitation of copper 566
Ferrières and Dupont, synthesis of bunsenite 602
synthesis of zincite 580
Ferrodolomite 492
Fibrolite 343
Fichtelite 624, 648
Fiedlerite 587
Field, F., analysis by 493
synthesis of copper minerals 571, 572
Finckh, L., serpentine from gabbro 348
Finley, G. I., dumortierite in pegmatite 346
Fircks, W. von, tin deposits 593
See Beck and Fircks.
Fischer, F., coal analyses 654
Fischer, H., mercury deposits 577
Fischer and Rust, microscopic structure of coal 666
Fischer, T. *See* Wedding and Fischer.
Fischerite 443
Fish Creek, analysis of water 72
Fisher, O., internal temperature of the earth 238
Fitch, E. S., analysis of bittern 186
Flagg, J. W., Chilean nitrates 206
Flechsig, R., analysis by 151
Fleck, H., water analysis 129
Flint 294, 464, 467
Flückiger, F. A., analysis by 156
Fluocerite 274
Fluorine, distribution 16
free, in fluorite 274
in mineral waters 149
in sea water 91
Fluorite 273, 274, 500
melting point 240
Fluorspar. *See* Fluorite.
Foerste, A. F., Clinton iron ores 453
Förstner, H., wurtzite as furnace product 578
Foote, E. A. *See* Koenig and Foote.
Foote, H. W., analyses by 281, 379, 386, 604
calcite and aragonite 473
See also Penfield and Foote.
Foote, W. M., leadhillite 588
Forbes, D., borate from hot springs 205
Chilean nitrates 206
South American borates 201
Forbes, E. H. *See* Penfield and Forbes.
Forbes, R. H., and Skinner, W. W., water analyses 69
Forbesite 602
Forchhammer, G., chemistry of the ocean 91, 93
heavy metals in rocks 542
magnesia in shells and corals 485
synthesis of apatite 292
Ford, W. E., formula of dumortierite 345
See also Penfield and Ford.
Forel, F. A., on Lac Leman 76
Formaldehyde in atmosphere 41
Formenti, C., bauxite 421
Formulæ, constitutional 518
Forsberg, ——, cited 94, 96
Forsberg, E. *See* Geuther and Forsberg.
Forsterite 323–325, 357
Forstner, W., mercury ores 577
Foster, C. Le Neve. *See* Bauerman and Foster.
Foulk, C. W., analysis cited 141
Foullon, H. B. von., gummite 614
nickel deposits 600, 602
rhodusite 322
Fouqué, F., formation of melilite 333
magmatic differentiation 245
steam from Etna 212, 213
volcanic gases 215, 217, 218
Fouqué, F., and Gorçeix, H., boric fumaroles 198

Page.
Fouqué, F., and Michel Lévy, A., crystallization of silica 298
formation of hematite 285
of magnetite 283
of melanite 336
of nephelite 308
of spinel 281
fusion of biotite and microcline 376
of scapolite rock 338
scapolite gabbro 514
synthesis of augite 317
of enstatite 312
of feldspars 301, 302
of leucite 305
of melilite 333
of mica trachyte 328
of olivine 324
Fournet, J., synthesis of chalcopyrite 567
synthesis of zinkenite 586
Foyaite 376
Fraas, O. F., formation of bitumen 636
France, lakes of 76
Franchi, S., glaucophane rocks 509
jadeite rocks 316
Franchi, S., and Stella, A., lawsonite in schist 345
Franck, L., and Ettinger, diamonds in steel 263
Franckeite 586, 591
Frankforter, G. B., water from Death Gulch 161
Frankland, P. F., coal gas 659
water analysis 73
Franklin, E. C. *See* Bailey, E. H. S.
Franklinite 279, 580, 581, 583, 584
Frazer, J. C. W. *See* Kastle, J. H., etc.
Frazer, P., classification of coals 659, 660
Frear, W., and Beistle, C. P., soils 431
Freda well, analysis cited 144
Freda, G., volcanic sublimates 221
Freis, R., fusion of mineral mixtures 252
Frieslebenite 562, 585
Fremy, E., artificial coal 664
humic substances in coal 651
synthesis of anglesite 588
of cerussite 587
Frenzel, A., Bolivian tin ores 591
formula of pseudobrookite 287
Fresenius, C. R., analysis by 143
manganese and iron in spring waters 457
Friedel, C., diamond 263
lead oxychlorides 588
nesquehonite 483
synthesis of atacamite 571
Friedel, C., and Cumenge, E., carnotite 615
Friedel, C. and G., alteration of muscovite 330
artificial cancrinite 310
conversion of muscovite into nephelite 308
formation of leucite 305
syntheses of feldspars 301, 302
Friedel, C., and Guérin, J., synthesis of ilmenite 286
Friedel, C., and Sarasin, E., formation of quartz and feldspar 302
synthesis of analcite 305
of hopeite 580
of phosgenite 587
of quartz and tridymite 295
of topaz 342
Friedel, G., hydration of analcite 304
lead oxychlorides 588
synthesis of corundum 275
Friedländer, J., artificial diamond 263
Frieseite 562
Frio, Rio, analysis of water 74
Friswell, R. J., action of nitric acid on coal 652
Frochot, M., tin deposits 595
Frommel, J. *See* Clermont and Frommel.
Früh and Schröter, peat 647
Fuchsite 326
Fuller, M. L., corrosion of quartz 300, 406
Fuller's earth 431
Fumaroles 212–220
Fumaroles, boric 196, 197, 198
Funafuti, atoll of 487
Fyris, River, analysis of water 81

G.

Gadolinite 618
Gadolinium 16
Gabbro 388–390
Gaertner, A., bog-iron ore 452
Gages, A., synthesis of serpentine 348
Gahnite 279, 580, 581, 584
Gaize 464, 466
Gale, H. S., carnotite 615
Gale, L. D., cited 119
Galena 584–590
Galena, volcanic 222, 229
Galenobismutite 585
Gallium, distribution 16
Ganomalite 590
Garda, Lago di, analysis of water 80
Garnet 334–337
Garnet rocks 516, 517, 539
Garnier, J., nickel deposits 601, 603
Garnierite 603
Gas, natural 620–621, 633
Gases in coal 660–663
Gaukhane Lake, analysis of water 130, 134
Gautier, A., arsenic in sea water 92
chemistry of volcanism 230, 233
decomposition of galena 585
hydrogen in atmosphere 40, 41
iodine in sea water 91
minervite 445, 446
nitrogen, argon, arsenic, iodine in granite 368
occluded and volcanic gases 226–231
origin of nitrates 209
reduction of copper sulphide 566
thermal springs and volcanism 168, 169

Page.
Gautier, F., tin deposits 593
Gay Lussac, cited 45
formation of hematite 284
Gaylussite 123, 191, 200
Gedrite 318, 319
Gehlenite 333, 334
Geikie, Sir A., bog-iron ore 452
elevation of continents 29
order of magmatic eruptions 256
saline matter in rivers 89
temperature of molten lava 243
Geikielite 287
Geitner, C., synthesis of argentite 560
synthesis of beyrichite 600
of greenockite 579
of pyrite 272
Genesee River, analysis of water 61, 83
Genth, F. A., alteration of corundum 280
alteration of orthoclase to albite 304
of talc 319, 349
analyses by 129, 524
gummite 614
lansfordite 483
pseudomorphous cassiterite 592
vermiculites 331
Genth, F. A., and Penfield, S. L., nesquehonite 483
Genthite 603
Geocronite 585
Geological thermometer 182
Gerhardtite 572
Germanium 16
Gersdorffite 599
Geuther, A., formula of gypsum 178
Geuther, A., and Forsberg, E., synthesis of wolframite 606
Geyserite 162
Gibb, A., and Philip, R. C., precipitation of silver sulphide 561
Gibbsite 418, 419, 421, 422
Gibson, J., analysis of manganese nodule 103, 104
See also Irvine, R.
Gigantolite 340
Gil, J. C., fluorine in spring waters 149
Gila River, analysis of water 69
Gilbert, G. K., Lake Bonneville 118
mirabilite at Great Salt Lake 187
salts of Sevier Lake 188
tufa 471
Gilbertite 326
Giles, W. B., bakerite 200
Gillman, F., nickel deposits 601
Gilsonite 625, 630
Girard, C., and Bordas, F., spring deposits 160
Girardin, J., magnesian travertine 481
Gismondite 350
Glaser, M. *See* Kalmann, W.
Glaserite 178, 182
Glass, occlusion of gases by 226
Glasser, B., nepouite 603
Glauberite 178, 182, 199, 201, 202
Glaucochroite 324
Glaucodot 599
Glauconite 105, 106, 439–442, 453, 492
Glaucophane 322, 323
Glaucophane schists 508–510
Glendonite 123
Glenn, W., chromite deposits 605
Glinka, K., glauconite 440, 441
kaolin 423
Globigerina ooze 101, 436
Glucinum, distribution 16
Gmelinite 350
Gmundenersee, analysis of water 80
Gneiss 412, 534, 535
Godeffroy, R., analysis of water 80
Goessmann, C. A., analyses by 141, 185
Goethite 451
Götz, J., ottrelite rocks 529
Gold, distribution 16
in igneous rocks 271
in sea water 93
ores of 553–558
solvents of 557
Goldberg, A., cited 151
Goldschmidt, V., composition of tourmaline 346
Gooch, F. A., analyses by 159
Gooch, F. A., and Whitfield, J. E., analyses by 150, 151, 153, 155
Goodenough Lake, analysis of water 125, 136
Gorby, S. S., petroleum 639
Gorçeix, H. *See* Fouqué and Gorçeix.
Gordon, C. H., change of augite to hornblende 508
nomenclature of gneiss 534
Gorgeu, A., analyses by 455
synthesis of fayalite 325
of pseudo-wollastonite 313
of pyroxene 314
of spessartite 336
of willemite 581
of zincite 580
Gorgeu, A., and Silber, P. G., synthesis of nephelite 308
Gortner, R. A. *See* Alway, F. J.
Gorup-Besanez, E. von, formation of magnesian carbonates 481
Goslarite 580
Gosling, E. B., ozokerite 625
Goss, A., water analysis 69
Gosselet, J., phyllites 529
Gossner, B., on glaserite 178
Gottlieb, E., analyses of wood 643
Gouvenain, C. A. de, alteration of bronze 568
Goyder, G. A., sulvanite 613
Grabau, A. W., classification of sedimentary rocks 459
Graftiau, J., cited 42, 46
Graham, T., colliery gases 663
gases from meteorites 234

Page.
Grahamite 624–626
Gramann, A., alteration of andalusite 344
Grandjean, formation of dolomite 486
Granite 360, 366, 368, 398, 412, 533
fusibility 242
radioactivity of 260
sulphur waters from 169
Granitite 366
Grant, U. S., zinc deposits 583
Graphite 266–267, 537
Graphitic acid 657
Graphitoid 657
Graton, L. C., tin deposits 291, 594
See also Hess and Graton.
Gray, ——, cited by Warington 47
Graywacke 462
Great Salt Lake, analyses of water 119, 134
Greenalite 284, 492, 493
Greenleaf, J. L., flow of the Mississippi 65
Greenlee, W. B., volume of ground water 22
Greenockite 578, 579
Greensand. *See* Glauconite.
Greisen 593
Greshoff, M., analysis by, cited 154
Griffiths, A. P., mercury ores 577
Grimsley, G. P., clays 431
gypsum 185
Griswold, L. S., novaculite 464
Groddeck, A. von, sericitic rocks 511
topazfels 342
Grossularite 334–337
Groth, P., constitution of kyanite 343
Ground water, volume of 22
Grout, F. E., plasticity of clays 426
Grubenmann, U., crystalline schists 506, 507
glaucophane rocks 509
Grünerite 319
Grünerite-magnetite schist 526
Grünlingite 595
Guano 444–450
Guadalcazarite 573
Guanajuatite 595
Gümbel, C. W. von, chloropite 518
compression of lignite 663
dolomite 485
glauconite 440
itabirite 525
origin of manganese nodules 103
Günther, R. T., and Manley, J. J., water analysis 130
Guérin, J. *See* Friedel and Guérin.
Gürich, G., ore deposits 541
Güeymard, E., platinum in chalcocite 610
Guignet, E., action of nitric acid on coal 652
Guignet, C. E., wax from peat 638
Guitermanite 585
Gummite 614
Gunnarite 599
Gurlt, A., talc 522
tungsten deposit 607

Page.
Gustavsen, C. N., analysis of water 68
Guthrie, F., change of obsidian to pumice 244
cryohydrates 247
eutectics 356
Gutzkow, F., analysis of bittern 185, 186
Gypsum 178, 181, 182, 183, 185, 197, 199, 201, 202, 460, 494, 495
Gyrolite 350
Gytje 438

H.

Hackmannite 309
Haefcke, H., constitution of hornblende 321
Haefele, P. E., alteration of andalucite 344
Hägele, C. *See* Heil and Hägele.
Haeussermann, F., and Naschold, W., coal analyses 656
Hague, A., origin of Yellowstone hot springs 168
scorodite in spring deposit 163, 164, 596
Hahn, H., hydrocarbons in iron 627
Hahn, H. C., analysis by 141
Hale, D. J., marl 472
Halite 179, 180
See also Salt.
Hall, C. W., and Sardeson, F. W., dolomite 486
Hall, Sir J., artificial coal 664
fusion of limestone 477
Hall, R. D., and Lenher, V., tellurides 556, 558, 562
Halloysite 417, 424, 527
Halotrichite 211
Halse, E., mercury ores 573
tin deposits 593
Hamberg, A., cited 111
native lead 584
Hammerschmidt, F., cited 182
Hanamann, J., waters of Bohemia 77, 78, 79
Hancock, D. *See* Phillips and Hancock.
Hanks, H. G., California borates 196, 198
Hanksite 200
Hannay, J. B., artificial diamond 263
occlusion of gases by glass 226
Hannayite 444
Hardin, M. B., analysis by 155
Hardman, E. T., analysis by 466
See also Hull and Hardman.
Hardpan 409
Hardystonite 580
Harker, A., average composition of igneous rocks 24–25
crystallization of magmas 257
primary iolite 339
Harkness, R., dolomite 487
Harmotome 350
Harney Lake, analysis of water 125, 136
Harper, H. W., asphalt 627
Harperath, L., Argentine salt 184
petroleum and salt 639

Page.
Harrington, B. J., analyses by 508
bornite 567
hydrogen sulphide in calcite 224, 470
See also Adams and Harrington.
Harris, G. D. *See* Dall and Harris.
Harrison, J. B., heavy metals in rocks 544
Harrison, J. B., and Jukes-Brown, A. J., coral rock 476
red clay 436
Harrison, J. B., and Williams, J., chlorides in rain 47
nitrogen compounds in rain 46
Harrogate, analyses of waters 143
Hartite 624
Hartleb, R. *See* Stutzer and Hartleb.
Hartley, W. N., gases in rocks 224
reduction of sulphates 116
Hartley, W. N., and Ramage, H., distribution of rare elements 26, 451, 558
Hartsalz 179, 180
Harzose 380, 382
Hasshagen, ——, water analysis 130
Hasslinger, R. von, artificial diamond 263
Hastings, J. B., gold ores 554
Hastingsite 322
Hatchettite 624
Hauenschild, G., predazzite 489
Hauer, K. von, analysis of water 132
Haüynite 309–311
Haüynophyre 378
Haushofer, dolomite and magnesite 484
Hausmann, J. *See* Zalozlecki and Hausmann.
Hausmann, J. F. L., wulfenite 589
Hausmannite 455
Hautefeuille, P., synthesis of enstatite 312
syntheses of feldspars 302
of greenockite and wurtzite 578
of leucite 305
of nephelite 308
of olivine 325
of perofskite 287
of quartz and tridymite 297
of rutile, brookite, and anatase 289
titanite 288
vanadinite 590
See also Troost and Hautefeuille.
Hautefeuille, P., and Margottet, J., synthesis of quartz and tridymite 297
synthesis of staurolite (?) 344
Hautefeuille, P., and Perrey, A., crystallization of titanic oxide 289
synthesis of beryl 347
of corundum 275
of zircon 291
Hautefeuille, P., and Saint-Gilles, L. P. de, synthesis of mica 328

Page.
Hawes, G. W., alteration of granite 532
analyses by 643
chloritization 518
native iron 267
Hawes, G. W., and Wright, A. W., gases in quartz 224
Hawkins, J. D. *See* Iles and Hawkins.
Haworth, E., petroleum 639
zinc deposits 583
Haworth, E., and Bennett, J., native copper 566
Hayes, A. A., distribution of vanadium 611
sodium iodate in Chilean nitre 208
South American borates 201
Hayes, C. W., alunogen deposits 211
bauxite 420, 421
corrosion of quartz 300, 406
iron ores 453
phosphatic sandstones 461
phosphorite 449
Hayes, C. W., and Eckel, E. C., iron ores 453
Hayes, C. W., and Kennedy, W., Texas petroleum 622
Hayes, C. W., and Ulrich, E. O., phosphorite 449
Hayes River, analysis of water 71
Haywood, J. K., analysis by 152
Haywood, J. K., and Smith, B. H., analyses cited 144, 154
Headden, W. P., action of water on orthoclase 406
analyses of river waters 55, 58, 59, 68
anthracite 656
barytic sinter 160, 498
cubanite 567
stannite 591
Heath, G. L., cited 60
Heazlewoodite 599
Heberdey, P., melilite and gehlenite in slags 333
wollastonite in slags 313
Hedburg, E., zinc deposits 583
Heddle, M. F., analysis by 441
Hedenbergite 314
Hedrumite 376
Heider, A., water analysis 130
Heintzite 180, 202
Helium, distribution 16, 615
in natural gas 621
in spring waters 140
Hell, C., fichtelite 648
Hell, C., and Hägele, C., artificial paraffin 620
Helmhacker, R., chromite deposits 605
Hematite 284, 286
melting point 240
Hempel, W., melting points of minerals 239, 240, 274
oxygen of the atmosphere 39
Henriet, H., formaldehyde in atmosphere 41
Heraeus, W. C., melting points of shales and clays 239

Page.
Hercynite 279, 280, 281
Herderite 348
Heron Lake, analysis of water 66
Heronite 307, 379
Hess, F. L., and Graton, L. C., distribution of tin 591
Hess, W. H., cave nitrates 205
Hessite 562
Hessose 383, 385
Heterogenite 602
Heubachite 602
Heulandite 349
Heumite 376
Heusler, F., formation of hydrocarbons 635
Heusser, C., and Claraz, G., Brazilian diamonds 265
Hewett, F., vanadium ores 613
Heyward, B. H., tallow clays 583
Hezner, L., amphibolite 510
eclogite 517
Hibschite 345
Hicks, H., phosphatic fossils 448
Hidden, W. E., Llano County minerals 618
sperrylite 610
xenotime in granite 294
See also Judd and Hidden.
Hidden, W. E., and Mackintosh, J. B., gadolinite, etc. 618
Hidden, W. E., and Pratt, J. H., sperrylite 610
Hidden, W. E., and Warren, C. H., yttrocrasite 618
Hiddenite 315
Hieratite 221
Highwood River, analysis of water 72
Highwoodose 370
Hikutaia Spring, analysis 149
Hilgard, E. W., analyses by 70, 124, 190
arid and humid soils compared 415–416
carbonates as solvents of silica 408
disintegration of rocks 415
origin of alkaline carbonates in soil 166, 194, 195
soils 431
Hill, B. F., Terlingua mines 573
Hill, J. B., and MacAlister, D. A., Cornish tin ores 592
Hill, R. T., Terlingua mines 573
Texas petroleum 622
Hillebrand, W. F., analyses by 146, 148, 149, 317, 366, 367, 368, 369, 370, 372, 373, 374, 375, 376, 379, 380, 581, 382, 383, 384, 385, 386, 387, 388, 389, 390, 391, 392, 393, 432, 438, 455, 468, 469, 489, 492, 510, 530, 531, 535, 546, 555, 614, 615
copper arsenates 570
distribution of vanadium 611, 612
heavy metals in rocks 543
kleinite 573
patronite 613
rare earth minerals 618
roscoelite 613
Hillebrand, W. F., zinc-bearing clay 583
See also Cross and Hillebrand.
Hillebrand, W. F., and Ransome, F. L., carnotite 615
Hillebrand, W. F., and Schaller, W. T., Terlingua minerals 573
See also Schaller and Hillebrand.
Hinde, G. J., chert and flint 465
Hiörtdahl, T., synthesis of jaipurite 600
Hiörtdahlite 317
Hitchcock, C. H., albertite 625
steatite 522
Hobbs, W. H., allanite and epidote 341
secondary galena 585
tungsten deposit 607
Hodges, R. S., analysis of water 63
Högbom, cited by Arrhenius 44
dolomitization 485–486
Hoernes, R. *See* Doelter and Hoernes.
Hoff. *See* Van't Hoff.
Hoffmann, E. W., solubility of minerals 404
Hoffmann, G. C., baddeckite 326
native iron 270
native platinum 608
souesite 269
Hoffman, L., iron ores 494
Hoffmann, R., synthesis of nephelite 308
Hofman, H. O., eutectics in slags 248
Hofmann, J. F., formation of coal 665, 666
Hofmann-Bang, O., rivers of Sweden.
Holtsema, S. *See* Bemmelen, J. M., van, etc.
Holland, P., and Dickson, E., decomposition of diabase 413
Holland, T. H., barite 500
bauxite 422
corundum rock 277
disintegration of rocks 407
graphite in syenite 267
laterite 417
Hollick, A. *See* Kemp and Hollick.
Holmium 16
Holmquist, P. J., synthesis of perofskite 287
Holway, R. S., eclogite 517
Hood, ——, analysis by 603
Hopeite 580
Hopkins, A. T., chlorine maps 47
Hopkins, T. C., limestones 478
Hopmann, H., water analysis 133
Hoppe-Seyler, F., formation of marsh gas 633, 634
synthesis of dolomite 482
Hornblende 319–322, 508
melting point 240
Hornblendite 390
Horner, L., silt 428
Hornstein, F. F., native iron 267
Hornung, F., origin of petroleum 635
Hornung, M., analysis of red mud 437
Hornung, T. *See* Duparc and Hornung.
Horowitz, J. *See* Dunin-Wasowicz.
Horsford, E. W., cited 63

Page.
Horsfordite 567
Hortonolite 324
Hoskins, A. P., glauconite 441
Hovey, E. O., artesian well at Key 339
cordierite gneiss 339
West 488
How, H., borates of Nova Scotia 203
Howard, C. C., natural gas 621
Howard, C. D., analyses by 66, 620
Howe, J. L., and Campbell, H. D., on Chichen-Kanab 126
Howlite 203
Huantajayite 564
Hübnerite 606, 607
Hudleston, W. H., phosphatic fossils 448
Hudson, E. J. *See* Mabery and Hudson.
Hudson River, analyses of water 62, 83
Hughes, G., phosphate rock 444
Hull, E., and Hardman, E. T., chert 464
Humboldt and Gay Lussac, cited 45
Humboldt Lake, analysis of water 123, 136
Humboldt River, analysis of water 123
Humboldt salt well, analysis 141
Humboldtine 644
Hume, W. F., loess 433
Humphreys, A. A., and Abbot, H. L., sediment of Mississippi River 429
Humphreys, W. J., rare earths in fluorite 274
Humus acids 409, 646, 651
Hundeshagen, L., platinum in wollastonite 610
Hungary, salt and warm lakes of 133
Hunt, A. E., bauxite 421
Hunt, T. S., abundance of petroleum 640
alteration of siderite 491
analysis by 61, 144, 155
cosmical atmosphere 49
formation of dolomite 481, 485
on atmospheric carbon dioxide 43
origin of alkaline carbonates 194
primeval ocean 108
salt and gypsum 183, 184
sedimentation 429
serpentine 521
See also Logan and Hunt.
Hunt, W. F. *See* Kraus and Hunt.
Hunter, M., analysis by 379
Hunter, M., and Rosenbusch, H., monchiquite 378
Huntilite 560
Hunyadi Janos, origin of water 167
Hurlbut, E. B., analysis by 376
Huron, Lake, analysis of water 61
Hurst, L. F. *See* Cameron and Hurst.
Hussak, E., associates of diamond 265
chalmersite 567
leucite pseudomorphs 307
native iron 268
palladium gold 555
perofskite-magnetite rock 288
Hussak, E., platinum and palladium 608
primary lolite 339
synthesis of wollastonite 313
See also Doelter and Hussak.
Hussak, E., and Prior, G. T., derbylite, etc. 598
Hussak, E., and Reitinger, J., monazite sand 294
Hutchings, W. M., minerals in sand 427
ottrelite 529
willemite in slag 581
Hutchins, W. M., apatite in slag 293
clays and shales 469
Hutchinson, ——, cited 46
Hutchinson, A., Meigen's reaction 473
See also Cundell and Hutchinson.
Hutchinson, brine, analysis of 141
Hutton, R. S. *See* Pring and Hutton.
Hyalite 295
Hyalophane 300
Hyalotekite 590
Hydrargillite. *See* Gibbsite.
Hydroboracite 180, 202
Hydrocarbons 619–641
in lava 230, 231
Hydrogen, distribution 16
in atmosphere 40, 41
Hydrogen dioxide in atmosphere 40
Hydronephelite 349
Hydrozincite 580
Hypersthene 311, 312

I.

Iceland, analysis of geyser water from 153
Iddings, J. P., consanguinity of rocks 253
fayalite in rhyolite 325
magmatic differentiation 245, 254
order of igneous eruptions 256
quartz basalt 299
rock diagrams 400
See also Barus and Iddings.
Iddings, J. P., and Cross, W., primary allanite 341
Iddings, J. P., and Penfield, S. L., fayalite in rhyolite 325
Idocrase. *See* Vesuvianite.
Idrialite 576, 625
Igelström, L. J., molybdenum in hematite 286
Igneous rocks 352–400
average composition 24–27
classification of 353–365
Ihlseng, M. C., phosphate rock 451
Ijolite 375, 376
Iles, M. W., and Hawkins, J. D., precipitated zinc sulphide 579
Iletsk salt lake, analysis of water 132, 134
Illiacus, A. *See* Ramsay and Illiacus.

Page.
Illinois River, chlorine in 85
Ilmenite 286, 287
Ilmenite norite 393
Ilosvay, L. von., water analysis 80
Illyés Lake, analysis of water 132, 134
Indalself, analysis of water 81
Indium, distribution 16
Infusorial earth 466
Ingalls, W. R., tin deposits 593
Ingol, Lake 81
Inostranzeff, A., native platinum 609
schungite 657
d'Invilliers, E. V., phosphate rock 444
Iodine, distribution 17
in sea water 91
in spring water 142
Iolite 339–340
Ionian Sea 94
Iowa, river waters of 64
Ippen, J. A., amphibolite 510
synthesis of cinnabar 575
Iridium 18, 607–611
Iridosmine 608, 609
Irish Sea, analysis of water 95
Iron, distribution 17
hydroxides of 451–454
in sea water 92
meteoric, chlorides in 109
native 109, 267–271
nitride 222
occlusion of gases by 234
Iron bacteria 452
Iron ore 282–286, 417, 451–454, 490–494
titaniferous 393
Irvine, R. *See* Murray, Sir J.
Irvine, R., and Gibson, J., manganese nodules 103
Irvine, R., and Young, G., solubility of calcium carbonate 98
Irving, J. D., tin deposits 594
Irving, J. D., and Emmons, S. F., tungsten ores 607
Irving, R. D., native copper 565
quartzite 524
Irving, R. D., and Van Hise, C. R., chert 466
enlargement of quartz grains 460
Iser River, analyses of water 77
Isochlors 47
Issyk-Kul, analysis of water 132, 136
Istrati, C. I., Roumanian salt 184
Itabirite 525
Itacolumite 265

J.

Jaccard, A., origin of petroleum 639
Jackman, W. F., cited 60
Jackson, D. D., cited 47
Jacobsen, O., analyses of dissolved air 111
analysis of peat 646
resins in peat 648
Jaczewski, L., origin of graphite 267
Jadeite 315–316
Jäger, F. M., analysis by 454

Page.
Jaffa, M. E., alkaline carbonates 194
Jaggar, T. A., and Palache, C., zoisite rock 513
Jahn, J. J., origin of petroleum 635
Jaipurite 599, 600
James River, analyses of water 63, 83
Jamesonite 585, 586
Jamieson, G. S., nickel-irons 270
See also Penfield and Jamieson.
Janda, ——, uranium ores 613
Janeirose 376
Jannasch, P., and Calb, G., composition of tourmaline 346
Jannasch, P., and Weingarten, P., vesuvianite 337
Jannetaz, E., formation of anglesite 588
Janssen, J., volcanic gases 220
Jaquet, J. B., platinum in ironstone 610
serpentine 348, 520
Jarman, J. L., analysis by 455
Jasper 294
Jeffersonite 314, 580
Jenkins, ——, analysis by 456
Jenney, W. P., artificial grahamite 626
recent blende 579
zinc deposits 583
Jennings, E. P., magmatic iron ores 284
Jenssen, H. S., copper in andesite 544
Jerdan, D. S. *See* Bone and Jerdan.
Jereméef, P., chalcopyrite and chalcosite 569
pseudomorphous garnet 337
pseudomorphs after olivine 325
Jervis, W. P., Tuscan fumaroles 204
Jet 649, 661
Joannis, A., fusion of limestone 478
Johansson, H. E., eutectics 249, 356
John, C. von, humus acid in coal 651
kainite and carnallite 181
Johns, C., transition point of quartz 297
Johnson, H. S., water analyses cited 79
Johnson, L. C., Florida phosphates 444
Johnston, R. A. A., analysis by 281
Johnston-Lavis, H. J., absorption of rocks by magmas 255
Vesuvian sublimates 221
Johnstone, A., action of water on micas 331
solubility of minerals 102, 404
Johnstrup, F., cryolite 274
Joly, J., age of the earth 108, 109, 110
meldometer 239
order of deposition of minerals 252
radium and geology 260
sedimentation 429
sublimation of enstatite 224
volume of oceanic salts 23
Jones, E. J., barite nodules 106
Jones, T. R., chert 464
Jonesville acid water, analysis 155
Jordan River, analysis of water 129
Jordan River (Utah), analysis of water 120
Jordanite 585
Jorissen, A., vanadium in delvauxite 612
Joseite 595

Page.
Josephinite 269, 270
Joukowsky, E., eclogite 517
Jowa, L., synthesis of selenite 495
Judd, J. W., alteration of plagioclase to scapolite 304
atoll of Funafuti 487
origin of scapolite 338
scapolite rock 514
Judd, J. W., and Brown, C. R., Burmese corundum 277
Judd, J. W., and Hidden, W. E., ruby 278
Judge, J. F., and Fennel, A. C., analysis by 142
Judithose 373
Jukes Brown, A. J. *See* Harrison and Jukes Brown.
Julien, A. A., alteration of spodumene 315
crenic acid in waters 83
decomposition of pyrite 273
geological effects of humus acids 409
phosphate rock 444
solution of silica by organic matter 465
Juvenile waters 168

K.

Kahlenberg, L., and Lincoln, A. T., hydrolysis of silicates 151
Kahlenberg, L., and Schreiner, O., borate ions 153
Kainite 178, 179, 180, 181
Kaiser, E., alteration of basalt 424
decomposition of rocks 411
Kaleczinzky, A., water analysis 132, 133
Kalgoorlite 555
Kallophilite 307, 308
Kallerudose 369
Kalilite 599
Kalmann, W., and Glaser, M., analysis by 143, 146
Kanab Creek, analysis of water from near 144
Kansas River, analysis of water 68
Kaolin 416, 418, 423
Kaolinite 349, 416, 527
Kapouran, analysis of water 143
Karaboghaz, Gulf 127, 136
Karlsbrunn, analysis of water from 149
Karlsdorf waters, analysis 145
Karstens, K., volume of the ocean 22
Kasarnowski, H. *See* Wöhler and Kasarnowski.
Kastle, J. H., Frazer, J. C. W., and Sullivan, G., phosphatic chert 466
Katamorphism, zone of 502
Katwee salt lake, analysis of water, 133, 137
Katzer, F., analyses of Amazon water 73
analyses of sea water cited 94
Katzer, F., mercury deposits 577
Kauer, A., analysis by 146
Kaufmann, F. G., dopplerite 647
Kay, G. F., nickel ores 602
Kayser, R., sulphur in petroleum 624
Kedabekase 389
Kehoeite 580
Keith, A., zinc deposits 583
Keller, G., formation of limonite 490
Keller, H. F., and Lane, A. C., chloritoid 327
Kelly, A., conchite 473
Kelvin, Lord, effect of pressure on fusibility 238
primitive atmosphere 50
Kelyphite 336
Kemp, J. F., bornite in pegmatite 568, 569
Franklin zinc ores 584
gneiss defined 534
gravitative differentiation in magmas 257
magmatic magnetite 284
metamorphosed dolomite 539
molybdenite in pegmatite 273
nickel ores 601
ore deposits 541, 548
platinum ores 271, 608, 609, 610, 611
relative abundance of elements 26
secondary enrichment 552
tellurides 555
Kemp, J. F., and Hollick, A., limestone 539
Kempton, C. W., tin deposits 593
Kendall, P. F., calcite and aragonite in shells 474
Kennedy, W., *See* Hayes and Kennedy.
Kenngott, A., alkaline reaction of minerals 403
composition of tourmaline 346
Kenrick, F. B. *See* Van't Hoff, Kenrick, and Dawson.
Kentallenose 383, 384
Kentrolite 590
Kentucky River, analysis of water 66
Kermesite 595, 597
Kern-theorie 358
Kerosene shale 637
Kersantite 371, 384
Kettner, C. H., analysis by 454
Keyes, C. R., linnæite 601
loess 433
ore deposits 541
primary epidote 341
recent blende 579
Kieserite 178, 179, 180, 181, 182
Kikuchi, ——, occurrence of iolite 340
Kilbrickenite 585
Kimball, J. P., grahamite 625
iron ores 453, 490
Kimberlite 265
Kinahan, G. H., bauxite 420
Kinch, E., sodium chloride in rain 47
King, C., internal temperature of the earth 238
King, F. P., Georgia corundum 278

Page.
Kingsbury, J. T., waters of Utah 119
Kirk, M. P., and Malcolmson, J. W., Terlingua minerals 573
Kisil-Kul, analysis of water 131, 135
saline deposits 187
Kitchell, W., marl 472
Kitchin, E. S., and Winterson, W. G., argon and helium in minerals 225
Klaprotholite 570
Klaref, analysis of water 81
Kleinite 573
Klement, C., analyses by 105, 530
formation of dolomite 482
laterite 418
origin of petroleum 634
Klementite 331
Klemm, G., minerals in sandstone 462
Klobbie, E. A., analysis by 454
See also Bemmelen, J. M. van, etc.
Knebelite 324
Knight, C. W., analcite trachyte 307
See also Campbell and Knight.
Knight, H. G., water analyses 70, 125
Knight, W. C., platinum in covellite 611
Knisely, A. L., water analyses 70
Knop, A., enlargement of quartz grains 460
Knoxvillite 604
Kobellite 585
Koch, A., celestite and barite 498
Köbrich, bauxite 420
Koene, C. J., primitive atmosphere 50
Koenig, A., genesis of diamond 265
Koenig, G. A., synthesis of domeykite 567
Koenig, G. A., and Foote, A. E., diamonds in meteorite 264
König, T., and Pfordten, O. von der, ilmenite 286
Königsberger, J., and Müller, W. J., synthesis of quartz and tridymite 296
Könite 624
Köttigite 580
Koettstorfer, J., iodine in sea water 91
Kohlmann, W., associates of cassiterite 291
Kohlrausch, F., hydrolysis of silicates 152
Koko-Nor, analysis of water 130, 137
Kolenko, B., hornblende pseudomorphs 321, 326
Kolderup, C. F., analysis by 393
Kolkwitz, R., and Ehrlich, F., on the Elbe 78
Kolotoff, S., analysis of sea water 95
Koninck, L. L., de, synthesis of cinnabar 575
Koninckite 443
Kornerupine 316, 529
Kosmann, H. B., silver halides 564
Koto, B., chloritoid rock 529
glaucophane rocks 509
piedmontite 341

Page.
Kovař, J., kyanite in limestone 344
Krämer, G., and Böttcher, W., origin of petroleum 634
Krämer, G., and Spilker, A., origin of petroleum 638
Kraus, E. H., celestite 497
Kraus, E. H., and Hunt, W. F., celestite 497
Kraut, K., diffusion of cobalt and nickel 599
Kremersite 221
Krennerite 555
Kreusler, U., oxygen of the atmosphere 39
Krogh, A., annual consumption of coal 42
oceanic carbonic acid 112, 115
on air from Greenland 42
Kruft, L., phosphorite 447
Krugite 178
Krypton 17, 38
Kryptotile 527
Ktypeite 473
Kümmel, H. B., clays 431
peat 645
Kuhlmann, F., synthesis of cerargyrite 564
Kulaite 386
Kultascheff, N. V., fusion of mixed silicates 246, 247
Kunz, G. F., Montana corundum 278
Kunz, G. F., and Washington, H. S., Arkansas diamonds 265
Kunzite 315
Kurnakoff, N. S., on Karaboghaz 127
Kurtz, C. M., analyses by 197
Kusnetsoff, S., on Karaboghaz 127
Kuss, H., mercury deposits 577
Kvassay, E. von, origin of alkaline carbonates 194
Kyanite 343, 344, 527, 528
Kyanite schist 530
Kyle, J. J., Argentine borates 202
vanadium in lignite 612
water analyses 74
Kyschtymase 393
Kyschtymite 277, 393

L.

Laa bitter spring, analysis 146
Laach, Lake, analysis of water 132, 136
Labradorite 300
Laby, T. H. *See* Mawson and Laby.
Lachat, ——, celestite 498
Lachaud and Lepierre, lead chromates 589
Lacroix, A., absorption of limestone by granite 255
allanite and epidote 341
alteration of bronze 571
alteration of hornblende to augite 321
alteration of serpentine 348, 521
berthierine 494
dumortierite in gneiss 346

Page.
Lacroix, A., eclogite rocks 516
formation of zeolites 351
glauconite 440
ktypeite 473
occurrence of lawsonite 345
phosphatized andesite 444
recent cerussite 587
scapolite rocks 338, 515
tridymite at Mont Pelée 298
volcanic sublimates 221, 222
See also Michel Lévy and Lacroix.
Lacroix, A., and Baret, C., wernerite rock 515
Lacu Sarat, analysis of water 132, 135
saline deposits 187
Laczczynski, ——, analysis of chromite 282, 604
Ladd, G. E., clays 431
Ladureau, A., sulphur in atmosphere 41
Lagonite 196
Lagorio, A., eutectics 356
formation of leucite 306
fusibility and solubility distinguished 253
glass-base 254
pyrogenic corundum 277
solubility of minerals in magmas 255
Lagoriolite 335
Lahille, F., analysis of sea water 94
Lahontan, Lake 118, 121–124
La Junta artesian well, analysis 149
Lake, P., laterite 418
Lampadite 455, 456, 571
Lamprophyre 371, 372
Lanarkite 588
Lane, A. C., eutectics 249, 356
Lane, A. C., magmatic gases 234
mine waters 546
native copper 565
the ocean 97
waters of Michigan 168
See also Keller and Lane.
Lane, A. C., and Sharpless, F. F., grünerite 319
Langbeinite 178, 189, 182
Lansfordite 483
Lanthanum 17
Lapis lazuli 309
Lapparent, A. de, distribution of solfataras 167
Laramie lakes, analyses of water 126, 135
Laramie River, analyses of water 67
Larderellite 196
Lartet, L., on Dead Sea 129
Lasaulx, A. von, alteration of rutile 286
kelyphite 336
sulphur deposits 496
Lasne, H., phosphorite 451
Laspeyres, H., olivine as a furnace product 324
sericite 510
Lassenose 367, 381
Lateral secretion 542
Laterite 417–424, 456

Page.
Latite 380, 381
Latschinoff, P. *See* Eroféef and Latschinoff.
Lattermann, G., barytic sinter 498, 499
Lattimore, S. A., analysis by 188
Laubanite 350
Laumontite 349, 350
Launay, L. de, average composition of igneous rock 25
magmatic waters 547
ore deposits 541
Laur, F., bauxite 419
gold and silver in Triassic rocks 553
Laurdalite 376
Laurdalose 372, 373
Laurionite 587
Laurite 607
Laurvikose 370
Lautarite 207
Lavenite 317
Lawrenceite 109
Lawson, A. C., chert 465
corundum rock 277
See also Adams and Lawson.
Lawson, A. C., and Palache, C., chert 465
Lawsonite 345
Lead, distribution 17
occurrence in a coral 93
ores of 584–590
Leadhillite 588
Lebedintzeff, A., water analyses 127, 128
Leblanc, F. *See* Deville and Leblanc.
Lechartier, G., synthesis of mimetite 590
syntheses of olivine 324
synthesis of pyroxene 314
Le Chatelier, H., Algerian alkaline deposits 194
clay substances in marl 480
constitution of clay silicates 416
formation of granite 366
fusion of limestone 478
thermo-couple 239
Leckie, J. S., nickel ores 603
Le Conte, J., Nevada borates 199
Le Conte, J., and Rising, W. B., mercury deposits 577
Leddin, ——. *See* Blum.
Ledoux, A. R., nickel ores 602
Leduc, A., hydrogen in atmosphere 41
Lee, G. W. *See* Collet and Lee.
Lefort, J., analysis by 156
Lehder, J., phosphatic nodules 451
Lehmann, B., sericitic rocks 511
Lehmann, T. *See* Engler and Lehmann.
Leibius, A., gold 554
Leighton, M. O., analysis of water 61
normal and polluted waters 86
Leith, C. K., actinolite-magnetite schist 319
glauconite and greenalite 440, 492, 493
origin of magnetite 28A

Page.
Lekene 625, 638
Leman, Lac, analysis of water 76
Lemberg, J., alterations of feldspar 304
alteration of spodumene and jadeite 316
of topaz 342
artificial cancrinite 310
chlorite pseudomorphs 332, 336
composition of sodalite 309
decomposition of rocks 411
double decompositions in silicates 425
epidotization 516
fusion of limestone 477
kaliophilite and nephelite 308
leucite and analcite 304, 305
predazzite 489, 490
primitive atmosphere 50
reactions with andalusite and kyanite 344
with gehlinite 334
serpentine 519, 520
syntheses of zeolites 350
tests for calcite and dolomite 485
Lemière, L., formation of coal 666
Leneček, O., predazzite 489
Lemétayer, P., water analysis 74
Lenarčič, J., formation of augite 317
formation of magnetite 283
of nephelite 309
fusion of mineral mixtures 252
recrystallization of albite 302
Lengenbachite 585
Lengyel, B. von, analysis of water 132
Lenher, V., gold telluride 556, 558
solution of gold 558
See also Hall and Lenher.
Lenicque, H., carbide theory of volcanism 230
origin of petroleum 632
primitive atmosphere 51
Lenk, H., augite-scapolite rock 339
Lenz, O., itabirite 525
Leonard, A. G., gas well 633
zinc deposits 583
Leonite 178, 179
Lepidolite 326–329, 593
Lepidomelane 327
Lepierre, C., fluorine in spring waters 149
Lepsius, R., composition of dissolved air 402
Lepsius, R., glaucophane schists 509
Lesley, J. P., grahamite 625
Lesquereux, L., origin of petroleum 637
Letheby, H., water analyses 82
Letts, E. A., and Blake, R. F., carbon dioxide in air 42
Leube, G., dolomite 485
Leucite 304–306
melting point 240
Leucite basalt 386
Leucite rocks 376–378
Leucite syenite 376
Leucitite 376
Leucopyrite 595
Leucoxene 287
Leuk, analysis of water 146
Levat, E. D., gold and silver in diabase 544
Levat, D., nickel ores 603
phosphate rock 449
Leverett, F., loess 433
Leverrierite 527
Levi, M. G., radioactivity of lava 259
Lévy. *See* Michel-Lévy; Fouqué and Michel-Lévy.
Levy, A., nitrogen compounds in rain 46
Levynite 350
Lewin, L. *See* Schweinfurth and Lewin.
Lewis, H. C., origin of diamond 264
Lewis, J. V., North Carolina corundum 278
See also Pratt and Lewis.
Lewisite 598
Lewy, H., analysis by 156
Lherzolite 390
Libbey, W., volcanic gases 220
Lieber, O. M., itabirite 525
Liebert, H., uranium in coal 616
Liebrich, A., bauxite 421, 424
Lienau, H., bauxite 422
Lignin 643
Lignite 648–653
Lignocellulose 643
Lignone 643
Lillianite 586
Limburgite, fusibility 242
Limburgose 386
Limestone 470–490, 535–540
average composition 27, 30
formation of 100
Limnite 451
Limonite 451–454, 490–492
Linarite 588
Linck, G., associates of spinel 280
oolite 474
orthoclase in dolomite 538
solubility of calcium carbonate 99
troilite 271
Lincoln, A. T. *See* Kahlenberg, L.
Lincoln, F. C., magmatic gases 237
Lindemann, B., minerals in limestone 539
Lindgren, W., analcite in rocks 378
brochantite 571
chalcocite 569
magmatic magnetite 284
magmatic waters as vein fillers 168
monazite sand 294
native copper 565
ore deposits 548
orthoclase as a gangue mineral 303
pseudomorphous galena 585
sericite and calcite 512
sodalite syenite 306, 311
stibnite in sinter 597
tin deposits 593
tungsten ores 607
Linnæite 599, 600, 601

Page.
Liparite 366
Liparose 367, 368
Lipp, A., analysis by 143
Lisboa, A., monazite sand 294
Litchfieldite 376
Lithium, distribution 17
in sea water 92
Lithosphere, average composition 23–33
volume of 22
Little, G., lead selenide 584
Liveing, G. D., cited 41
Liversidge, A., analyses by 144, 603
bog-iron ore 454
cobalt ores 602
coral 476
distribution of silver 558
gold in recent pyrite 556
in sea water 93
mercury in sinter 577
precipitation of gold 558
silver in sea water 93
solvents of gold 557
Livingstonite 573, 575, 597
Ljubavin, N., cave earth 205
Ljusnan, River, analysis of water 81
Locke, J. M., uintaite 625
Lockyer, J. N., cited 12
Löllingite 273, 595
Loess 432–434
Loew, O., analyses by 69, 120, 124, 189
Loewe, L., cited, on Stassfurt salts 176
Loewinson-Lessing, F., classification of igneous rocks 358
eutectics 356
magmatic differentiation 245, 254, 255
origin of volcanic gases 230
relative abundance of minerals 251
solubility of minerals in magmas 255
Loewite 178, 179, 182
Logan, W. E., and Hunt, T. S., phosphatic shell 448
Lohmann, P., eclogite 517
Loire, River, analysis of water 76
Long, J. H., cited 60
Longbanite 598
Lorandite 595
Lord, E. C. E., analysis by 389
Lorentz, R., synthesis of greenockite and wurtzite 578
synthesis of troilite 272
Lorenzen, J., graphite in basalt 267, 268
Loretz, H., iron ores 494
Losanitsch, S. M., chromiferous clays 604
Lossen, C., itabirite 525
quartzite 524
Lossen, K. A., albite alterations 512
Lossenite 590
Lossier, L., water analyses 76
Lost River, analysis of water 70
Lotti, B., copper ores 568
stibnite and cinnabar 597
Louderback, G. D., radioactivity and volcanism 259
Loughlin, G. F., clays 431

Page.
Louisville artesian well, analysis 145
Luca, S. de, analysis by 156
Lucas, R., physical properties of clays 426
Ludlamite 443
Ludwig, A., artificial diamond 263
Ludwig, E., analysis by 146, 149
Ludwig, F., analyses by 131, 187
Ludwig, F. J. H., analysis by 161
Luedecke, ——, water of the Oder 80
Luedeking, C., lead chromates 589
Luedeking, C., and Wheeler, H. A., barite 499
Lujavrose 373
Lunge, G., cited, on Stassfurt salts 176
Lunge, G., and Millberg, C., solubility of quartz 300
Lunge, G., and Schmidt, R. E., analysis by 146
Lunn, A. C., internal temperature of the earth 238
Lupton, V. T., analysis of water 66
Lutecite 295
Luzi, W., corrosion of diamond 265
formation of graphite 266
Lyell, C., precipitated calcium carbonate 471
Lyons, A. B., copper in lava 544
soils 431

M.

Mabery, C. F., natural gas 620
petroleum 620, 622, 623, 624, 634
See also Robinson, A. E.
Mabery, C. F., and Byerly, J. H., byerlite 627
Mabery, C. F., and Hudson, E. J., petroleum 622, 623
Mabery, C. F., and Palm, O. H., Ohio petroleum 622
Mabery, C. F., and Quayle, W. O., petroleum 622, 624
Mabery, C. F., and Smith, A. W., Lima oil 624
Mabery, C. F., and Takano, S., Japanese petroleum 622
MacAlister, D. A. *See* Hill and MacAlister.
Macallum, A. B., cited 97
MacBride, T. H., peat 648
McCaleb, J. F., cited 182
McCalley, H., bauxite 420
McCallie, S. W., iron ores 453, 594
limestones 478
phosphate rock 450
McClelland well, analysis 149
McConnell, W., gases in coal 662
McCourt, W. E., and Parmelee, C. W., peat 648
McCreary, P. L. *See* Evans, F. W.
McCreath, A. S., coal analyses 656
Macé, ——, synthesis of anglesite 588
McGee, W J, bitumens 639
laterite 417
loess 432

Page.
McIlheney, P. C., solvent of gold 557
McIntosh, D. *See* Eve, A. S.
McIvor, R. W. E., guano phosphates 444
maldonite 555
McKee, R. H., mass of atmosphere 49
Mackie, W., analyses of clays 430, 431
analyses of sand 428
calcium fluoride as cement 461
on age of the earth 109
sandstones 463
Mackintosh, J. B. *See* Hidden and Mackintosh.
Mackintoshite 618
Maclaren, J. N., gold and silver in sinter 163, 556
hot springs of New Zealand 168
Maclaren, M., laterite 418
Maclaurin, J. S., cited, on New Zealand spring waters 153
Macomb deep well, analysis of water 150
Mactear, J., mercury ores 573
Madupite 376
Madupose 376
Magma, temperature of 238–243
Magmatic assimilation 255, 256
Magmatic differentiation 253
Magmatic dissociation 245–247
Magmatic solutions 244–247
Magmatic stoping 256
Magmatic waters 547
Magdeburgose 366, 367, 368
Magnesioferrite 279
Magnesite 351, 484
Magnesium, distribution 17
Magnenat and Wooten, analyses by 650
Magnetite 279, 282, 283, 284
melting point 240
Magnetite spinellite 393
Magnochromite 604
Mahanuddy River 82
Main, River, analysis of water 77
Majorana, Q., diamond 263
Makin, C. J. S., analysis of sea water 94
Malachite 572
Malbot, H. and A., phosphorite 448
Malcolmson, J. W. *See* Kirk and Malcolmson.
Maldonite 555
Malignose 375
Malkomesius, P., and Albert R., Cassel brown 651
Mallard, E., lead oxychlorides 588
Mallet, F. R., Indian corundum 277
laterite 417
lateritic manganese 456
on langbeinite 179
Mallet, J. W., allanite 618
analysis by 162
gases from meteorites 234
silver in volcanic ash 221, 543
Maltha 626
Mangandolomite 492
Manganese, distribution 17
in sea water 93
ores of 419, 455–458
Manganese nodules 102, 103, 104, 455
Manganite 455
Manganosite 455
Manitoulin Island, analysis of water from 144
Manjak 626
Manley, J. J. *See* Günther, R. T.
Mann, P., alteration of titanite 288
constitution of pyroxenes 318
Manross, N. S., asphalt 626
synthesis of apatite 292
of lead ores 588, 589
of scheelite 606
Marcano, V. *See* Muntz, A. 73
Marcasite 273
Marck, W., von der, analysis of sandstone 461
Marckwald, W., uranium ores 613
Marcusson, J., artificial petroleum 630
origin of petroleum 634, 639
Margarite 327
Margarodite 326
Margottet, J., reduction of silver sulphide 559
synthesis of argentite 560
See also Hautefeuille and Margottet.
Marialite 337, 338
Maricose 390
Marienquelle, analysis of water 143
Marignac, C. de, synthesis of dolomite 480
Marigny, F. D., Algerian waters 59
synthesis of chalcopyrite 567
synthesis of galena 584
Marl 441, 472, 486
Marmora, Sea of, analysis of water 95
Marsden, R. S., artificial diamond 263
formation of crystalline silica 296
Marsh gas 633, 634
Marshite 571
Marsilly, ——, analysis of peat 645, 646
Martens, P., Chilean thermal waters 205
Martin, K., phosphate rock 444
Martin, W. J., platinum ores 608
Martinite 444
Massicot 586
Masing, E., synthesis of anglesite 588
Matildite 562, 563
Matlockite 587
Matteucci, R. V., volcanic ammonium chloride 222
Matthew, W. D., phosphatic nodules 448
Maumee River, analysis of water 61, 83
Mauzeliite 598
Mawson, D., carnotite 616
Mawson, D., and Laby, T. H., radioactivity of minerals 260
Maumené, E., manganese in sea weeds 93
Maxwell, W., Hawaiian lavas and soils 417, 423, 431
Mayençon, ——, artificial galena 584
sulphides formed in burning coal mine 596

Page.
Mayr, F. *See* Simmersbach and Mayr.
Mead, W. J., relative proportions of sedimentary rocks 31
Meadows, T. C., and Brown, L., phosphorite 449
Mecca, holy well at, analysis of water 154
Mediterranean Sea, analysis of water 95
Medve Lake 132
Mehu, M. C., synthesis of cinnabar 574
Meigen, W., calcite and aragonite 473
Melonite 337, 338
Melanite 335
Melanochroite 588
Melanotekite 590
Meldometer 239
Meldrum, R., solubility of copper 565
Melilite 332–334
Mellite 644
Melonite 599
Melville, W. H., analyses by 124, 145, 154, 463, 468, 510, 522, 526, 576, 596
glaucophane rock 509
josephinite 269
Menaccanite 286
Mendeléef, D., origin of petroleum 631
periodic classification 35
Mendipite 587
Meneghinite 585
Mennel, E. P., average composition of igneous rock 25
Mercury, distribution 17
ores of 572–577
Merian, A., constitution of pyroxenes 318
Merivale, W., manjak 626
Merrill, G. P., analyses by 412
asbestos 318
cave gypsum 183
disintegration of rocks 406, 408, 411, 412, 414
gold in granite 271, 553
onyx marble 470
serpentine 520
Merrill, J. A., flint 465
Merrimac River, analysis of water 62
Merz, ——, water analysis 76
Mesitite 351, 490
Mesolite 350
Metabrushite 444
Metachlorite 331
Metacinnabarite 573, 574, 576
Metallic ores 541–618
Metamorphic rocks 501–540
Metastibnite 595, 597
Meteorites, diamonds in 264
gases from 234
Meunier, S., analysis by 143
bauxite 420
carbon in meteorite 632
composition of fossil plants 654
origin of petroleum 631
of platinum 609, 610
planetary atmospheres 50

Page.
Meunier, S., synthesis of anorthite 301
synthesis of brochantite 572
of chromite 282, 604
of enstatite 312
of leucite 305
of nephelite 308
of olivine 325
of phoenicochroite 589
of spinel 280
of tridymite 296
tin in sinter 592
troilite 271
volcanic explosions 243
See also Daubrée and Meunier.
Meuse, River, analysis of water 76
Meyer, E., von, gases in coal 662
Meyer, O., calcite and dolomite 485
Meyerhoffer, W., phase rule 250
See also Van't Hoff and Meyerhoffer.
Miargyrite 562, 563
Miaskose 373, 378
Micas 326–331
Mica schist 531, 532, 533
Michael, P., saussurite gabbro 513
Michel, L., bismuth in molybdenite 605
synthesis of azurite 572
of lead ores 590
of melanite 336
of minium and plattnerite 586
of powellite 605
of rutile 289
of titanite 288
of tungsten minerals 606
Michel Lévy, A., magmatic differentiation 256
minerals in sand 427
primary epidote 341
quantitative classification 365
scapolite gabbro 514
Michel-Lévy, A., and Lacroix, A., envelopment of allanite 342
Michel-Lévy, A., and Munier-Chalmas, E., chalcedony 295
Michigan, waters of 61
Michigan, Lake, analysis of water 61
Microcline 300–304
Micrometric analysis of rocks 399
Micro-organisms in coal formation 666
Micropegmatite, as an eutectic 249
Microsommite 309
Middlemiss, C. S., Indian corundum 277
Miersite 564
Miklucho-Maclay, M. von, occurrence of cassiterite 291
Milch, L., quantitative classification 365
Millberg, C. *See* Lunge and Millberg.
Millelacs Lake, analysis of water 65–66
Miller, A. M., phosphatic fossils 448
Miller, W. G., cobalt ores 601
corundum anorthosite 277
limestone 478
nickel in magnetite 282
Millerite 599, 600, 601
Mills, J. E., geological work of anta- 410

Page.
Milosin 604
Mimetite 589, 590
Minervite 445
Minette 371, 372
Minette (iron ore) 494
Mine waters 144, 148, 546
Mineral waters, classification 140, 157, 158
Mingaye, J. C. H., analysis by 151
cave phosphates 445
platinum 610
vanadium in clay 612
Minium 586
Minnetonka, Lake, analysis of water 66
Minor, J. C. *See* Penfield and Minor.
Minssen, H., and Tacke, B., solubility of calcium phosphate 443
Mirabilite 181, 187
Mispickel 595
Mission Creek, analysis of water 70
Missouri River, analyses of water 67
Missourite 376
Mississippi River, analyses of water 65
chlorine in 85
flow of 65
sedimentation in 429
Mittagong chalybeate spring, analysis 151
Mitchell, ——, water analysis cited 129
Mitchellite 604
Mixite 571
Mizzonite 338
Möricke, W., gold in pitchstone 271, 553
Mofettes 214
Mohawkite 567
Mohawk River, analysis of water 62, 83
Moissan, H., analyses of volcanic gases 219
carborundum in meteorite 266
graphite in pegmatite 267
melting point of corundum 274
metallic carbides 628
on diamond 263, 264
origin of petroleum 631
origin of volcanic activity 230, 233
volatility of metallic oxides 223
See also Becquerel and Moissan.
Moitessier, A., artificial dolomite 481
Moldau River, analysis of water 77, 78
Moldenhauer, ——, water analysis 76
Molengraaf, G. A. F., cordierite vitrophyrite 339
Molengraaf, P. F., cassiterite 594
Molybdenite 273, 605, 606
Molybdenum, distribution 18
ores of 605–607
Molybdic ocher 605
Molybdophyllite 590
Monazite 293, 294, 618
Monchiquite 379
Monckton, G. F., mercury deposits 577
Monetite 444
Mcnke, H., and Beyschlag, F., origin of petroleum 634
Monmouthite 376
Mono Creek, analysis of water 70
Mono Lake, analysis of water 124, 137
Monongahela River, analysis of water 66
Montesano Springs, analysis 142
Monticellite 324, 326
Montmorillonite 527
Montroydite 573
Monzonite 380, 381
fusibility 242
Monzonose 370, 380, 384
Moore, C. C., barytic sandstones 461
sandstones 463
Moore, G. E., analysis by 154
Moosehead Lake, analysis of water 62
Morawsky, T. *See* Schinnerer and Morawsky.
Mordenite 350
Moreing, C. A., manganese ores 456
Morenosite 602
Morley, E. W., variations in atmospheric oxygen 39, 40
Morlot, A. von, sand calcites 459
synthesis of dolomite 481
Morozewicz, J., alteration of diorite 413
analyses by 393
artificial feldspars 301
formation of acmite 315, 316
of augite 317
of corundum 275, 276, 277
of enstatite 312, 313
of hematite 285
of iolite 339
of magnetite 283
of mica 329
of nephelite 309
of quartz and tridymite 297
of sillimanite 343, 344
lagoriolite 335
gravitative adjustment in magmas 258
syntheses of noselite, haüynite and sodalite 310, 311
of pyroxenes 314
solubility of alumina in magmas 251
Morse, H. W., gases in fluorite 274
Morton, E. H. *See* Thorpe, T. E.
Moses, A. J., mercury minerals 573
Moses, O. A., phosphate rock 449
Moses Lake, analysis of water 125, 136
Moss, E. L., on Arctic air 42
Mottramite 612
Moulton, F. R., internal temperature of the earth 238
Moureu, C., and Biquard, R., argon and helium in waters 140
Mourlot, A., vanadium in coal 612
Mrazec, L., and Teisseyre, W., Roumanian salts 187
salt lakes of Roumania 132
Mrha, J., kelyphite 336
Muchin, J. von, analyses by 608
Muck, F., constitution of coal 667
Muck, J. ozokerite 625
Muds, oceanic 436, 437
Mügge, O., calcite and aragonite 473

Page.
Mügge, O., occurrence of perofskite 288
scapolite amphibolite 515
transition of quartz 297
Mülhäuser, O., artificial graphite 266
Müller, H., mine water 546
Müller, R., solubility of minerals 293, 403, 404, 442
Müller, W., artificial magnetite 283
Müller, W. J. *See* Königsberger and Müller.
Muellerite 444
Münster, C. A., gold in sea water 93
Münster, H., bauxite 420
Munroe, C. E., artificial hematite 285
Muntz, A., atmospheric transport of salt 48
bacterial decomposition of rocks 409, 410
bromine in Chilean niter 208
nitrates in the Nile 82
origin of nitrates 209, 210
Muntz, A., and Aubin, E., oxygen of the atmosphere 39
Muntz, A., and Marcano, V., black waters of South America 73
cave nitrates 205
nitric acid in rainfall 46
Murdoch, J. A. W., atacamite 571
Murgoci, G. M., riebeckite rocks 323
Murray, Sir J., chemical reactions on ocean floor 101
oceanic carbonic acid 113
origin of manganese nodules 102
saline matter in rivers 88
total annual rainfall and run-off 53
volume of the ocean 22
Murray, J., and Irvine, R., ammonia in sea water 92
calcium carbonate in sea water 97
formation of siliceous ooze 439
maintenance of marine life 116
manganese nodules 102
re-solution of coral rock 99
secretion of lime salts by marine animals 100
sediment in sea water 429
silica in sea water 92
Murray, J., and Renard, A. F., deep sea deposits 101–106
glauconite 439, 440
oceanic sediments 435, 436
origin of glauconite 105
phosphatic nodules 104, 447
solubility of silica 100
Muscovite 326–331

N.

Nadorite 590
Nagyagite 584
Nantier, A., phosphorite 451
Nantokite 571
Napalite 576, 624, 625
Naphtenes 622
Naphthalene 623
Naschold, W. *See* Haeussermann and Naschold.
Nasini, R., and Anderlini, F., analysis by 142
Nasini, R., Anderlini, F., and Salvadori, R., fumarole gases 148, 216
Nasini, R., and Levi, M. G., radioactivity of lava 259
Nasini, R. *See also* Perrone and Nasini.
Nason, F. L., Franklin zinc ores 584
iron ores 494
scapolite rocks 515
Nasonite 590
Nastukoff, A., cellulose 642
Natrolite 349
Natron 125, 191, 199, 200
Natron Lake, analysis of water 133, 136
Natterer, K., ammonia in sea water 92
analyses of water 94, 95, 130
marine muds 438
on marine clays 107
Natural gas 620–621, 633
Naumannite 562, 584
Navarro, F., native iron 267
Neagh, Lough, analysis of water 76, 83
Nebular hypothesis 108
Negro, Rio, analysis of water 74, 83
Nelson, J. L., analysis by 320
Nelson River, analysis of water 71
Nentien, —— antimony ores 597
Neodymium 18
Neon 18, 38
Neosho River, analysis of water 69
Nephelite 307–309
melting point 240
Nephelite basalt 387
Nephelite rocks 373–376
Nephelite syenite 242, 374
Nepouite 603
Nesquehonite 483
Nessler. *See* Petersen and Nessler.
Neuberg, C., origin of petroleum 634
Nevadite 366
Nevius, J. N., tin deposits 593
Nevyanskite 607
Newberry, J. S., bog-iron ore 452
cannel coal 655
origin of petroleum 637, 638
ozokerite 625
Newbery, J. C., gold in iron ore 556
Newberyite 444
Newsom, J. F. *See* Branner and Newsom.
Newton, W., origin of nitrates 209
Newtonite 527
New Zealand geysers, analyses of waters 153, 156
Niccolite 599, 601
Nichols, H. W., cave nitrates 205
Nicholson, E., cited 82
Nickel, distribution 18
in ashes of sea weed 93
ores of 598–603
Nickel-iron, native 269, 270
Nicolardot, P., hydroxides of iron 453, 454

Page.
Nile River, analysis of mud 429
analyses of water 82, 83
sedimentation in 429
Niobium. *See* Columbium.
Nitrate deposits 205–211
Nitric acid in rainfall 46
Nitrogen, distribution 18
in sea water 91
proportions in the atmosphere 39, 40
volcanic origin of 222
Nitrogen bases in petroleum 624
Nitroglauberite 206, 208
Nitze, H. B. C., iron ores 494
monazite 294, 618
Nivenite 614
Nivoit, E., phosphate rock 442
Nocerite 221
Noeggerath, J. J., pyromorphite in slag 589
Noellner, C., origin of nitrates 209
Noelting, J., zinc blende 578
Nontronite 416
Nordenskiöld, A. E., carbon in meteorite 632
native iron in Greenland 268
uranium in coal 616
Nordenskiöldine 591, 593
Nordmarkite 370
Nordmarkose 370, 374
Norite 390
Northupite 200
Nosean. *See* Noselite.
Nosean sanidinite 378
Noselite 309–311
Noumeite 603
Novaculite 464, 466
Noyes, W. A., analyses by 60, 61, 65, 71, 148, 412
Nutter, E. H., and Barber, W. B., glaucophane rocks 509

O.

Oak Orchard acid spring, analysis 155
Obalski, J., uranium in pegmatite 616
Obsidian 367
fusibility of 244
Occlusion of gases in rocks 224–232
Ocean, age of 109, 110
composition of 23
elements in 91, 92, 93
gases in 110–115
influence of living organisms on 115, 116, 117
the primeval 108
volume of 22
Ocean water, carbonates in 98, 99, 100
changes in composition due to freezing 96
concentration of 173, 174, 175, 176
density and salinity of 96, 97
Oceanic salts, composition of 94–98
volume of 23
Oceanic sediments 435–439
Ochers as spring deposits 160, 161

Page.
Ochrolite 590
Ochsenius, C., average composition of igneous rock 25
cited, on Stassfurt salts 176
on Great Salt Lake 119
origin of alkaline carbonates 195
of borates 204
of petroleum 635, 636
of salt beds 175, 176
saltpeter deposits 206, 210
Octahedrite 288–290
Oebbeke, K., glaucophane rocks 323, 509
Oehmichen, H., chalcanthite 571
Ogden River, analyses of water 120
Ojo Caliente, analysis of water 149
Okenite 350
Oklahoma, river waters 68
Oldham, R. D., laterite 417
Old Wives Lake, analysis of water 126, 135
Olefines 621, 622
Olette Springs, analysis 152
Oligoclase 300
Olivenite 570
l'Olivier, V., Chilian nitrates 206, 207
Olivine 323–326
melting point 240
Om, River, analysis of water 81
Omeose 368
Onega, Lake, analysis of water 81
Onofrite 573
Onyx marble 470
Oolite, water from 76
Oolite, calcareous 471, 474
Oolite, siliceous 466
Oolitic sand 121, 471
Opal 294–300, 465
Organic matter in rock decomposition 408, 409
Organic matter in waters 83
Orpiment 595, 596
Orthite 340
Orthoclase 300–304
Orthogneiss 534
Ortlieb, J., ciplyte 446
Orton, E., dissemination of petroleum 639
origin of petroleum 634
spore cases in coal 666
Osann, A., classification of igneous rocks 358
Osmium 18, 607–611
Osteolite 443
Ottawa River, analysis of water 61
Ottrelite 327, 330, 529, 530
Ottrelite schist 530
Outwater, R., analysis of water 63
Ovenstone 522
Owens Lake, analysis of water 124, 137
soda from 192
Oxygen, concentrated by solution 45
distribution 18
proportions in the atmosphere 39, 40
solubility in salt water 110, 111
Ozokerite 624, 625, 638
Ozone in atmosphere 40

P. Page.

Packard, R. L., analysis by 412
Pagenstecher, J. S. F., water analyses 76
Pahua Spring, analysis 142
Palache, C., crossite 322
See also Jaggar and Palache; Lawson and Palache; Ransome and Palache.
Palic Lake, analyses of water 132, 136
Palladium 18, 607–611
Palladium gold 555, 607
Palm, O. H. *See* Mabery and Palm.
Palmer, A., chlorine in river waters 85
Palmerite 445
Palmierite 221, 588
Pantanelli, D., origin of petroleum 635
Pandermite 200, 201
Papagayos, Rio de los, analysis of water 74
Papavasiliu, S. A., emery 278
Pappe, A., and Richmond, H. D., water analysis 133
Paraffin series 619–620
Paragonite 326–330
Paragneiss 534
Paralaurionite 587
Paramo de Ruiz, hot spring, analysis 156
Parana, River, analysis of water 74
Pargasite 319
Park, J., mercury ores 577
Parmelee, C. W. *See* McCourt and Parmelee.
Parmentier, F., alumina in mineral waters 420
synthesis of quartz and tridymite 297
Parr, S. W., classification of coals 659
Parry, J., gases in iron 234
Parsons, A. L., gypsum 185
peat 648
Passarge, S., laterite 417
Patton, H. B., analysis by 367
formation of tourmaline 347
Patronite 613
Payen, A., Tuscan fumaroles 198
Pearce, R., solvent of gold 557
uraninite 613
Pearceite 562
Peat 645–648, 663
cupriferous 566
Peckham, S. F albertite 625, 626
origin of petroleum 637
petroleum 624
Peckham, S. F. and H. E., sulphur in petroleum 624
Pecos River, analysis of water 69
Pectolite 350
Peganite 443
Pelle, W., bauxite 420
Pelpus, Lake, analysis of water 81
Pelikan, A. analcite phonolite 307
Pellew, C. E. *See* Chandler, C. F.
Pemberton, H., and Tucker, G. P., water analyses 126

Page.

Pencatite 489
Penfield, S. L., analyses by 618
caesium beryl 347
sulphohalite 199
See also Dana and Penfield; Genth and Penfield; Iddings and Penfield; Wells and Penfield.
Penfield, S. L., and Foote, H. W., composition of tourmaline 347
magnesia in ilmenite 286
Penfield, S. L., and Forbes, E. H., fayalite in granite 325
Penfield, S. L., and Ford, W E., sand calcite 459
Penfield, S. L., and Jamieson, G. S., tychite 200
Penfield, S. L., and Minor, J. C., formula of topaz 342
Penfield, S. L., and Pratt, J. H., formula of staurolite 344
Penfield, S. L., and Sperry, F. L., chlorite pseudomorphs 336
Penfield, S. L., and Stanley, F. C., composition of hornblende 319, 322
Penfieldite 587
Penhale, M., chromite deposits 605
Penninite 331
Penrose, R. A. F., alterations of ore deposits 551
iron ore from glauconite 453, 492
manganese ores 456
phosphate rock 442, 450
tin deposits 593
Pentlandite 599, 600
Perchlorates in Chilean water 208
Percy, J., coal analysis 656
Percylite 587
Periclase 538
Peridot 324
Peridotite 390–392
Periodic classification of the elements 33–36
Perofskite 287, 288
Perrey, A. *See* Hautefeuille and Perrey.
Perrone, E., and Nasini, A., origin of borates 198
Peter, R., matter extracted from soil by plants 409
Petermann, A., and Graftiau, J., cited 42, 46
Petersen, T., bauxite 420
nickel in magnetite 282
Petersen and Nessler, analyses of pea 645
Petersen and Schödler, analyses of wood 643
Petersson, W., analysis by 393
Petrasch, K., fusion of mineral mixtures 252
Petroleum 619, 641

Page.
Pettersson, O., on brine from melting ice 96
Pettersson, O., and Sondén, K., on air from sea water 45, 111
Petzite 555
Pfaff, F. W., dolomitization 483
Pfeiffer, E., cited on Stassfurt salts 176, 177
Pfordten, O. von der. *See* König, T.
Phacelite 307
Phalen, W. C. unakite 516
Pharmacolite 598
Pharmacosiderite 598
Phase rule 250
Phenol, in petroleum 623
Philip, R. S. *See* Gibb and Philip.
Phillips, A. H., carnotite 616
Phillips, F. C., formation of marsh gas 634
natural gas 621
petroleum in fossils 636
Phillips, J. A., desert sand 427
gold on cinnabar 556
mercury deposits 577
mine waters 546
sandstone 463
Phillips, W. B., iron ores 494
phosphorite 449
Terlingua mines 573
Phillips, W. B., and Hancock, D., bauxite 421
Phillipsite 102, 350, 351
Phipson, T. L., primitive atmosphere 50
Phlegrose 370
Phlogopite 327–330
Phœnicochroite 588, 589
Phonolite 373
fusibility 242
Phosgenite 587
Phosphate rock 442–451
Phosphatic nodules 104, 105, 447
Phosphorite 442–451
Phosphorus, distribution 18
in sea water 92
Phosphosiderite 443
Phyllite 524, 525, 529
Pichard, P., solubility of minerals 403
Pickeringite 202
Picotite 281
Picrite 390
Picromerite 178, 179
Piedmontite 340, 341
Pierre, I., salts in rainfall 48
Pigeon River, analysis of water 61
Pimelite 603
Pinite 339, 340
Pinnonite 180, 202
Pinnow, J. *See* Will and Pinnow.
Pirsson, L. V., cassiterite in hematite 592
crystallization of magmas 257
primary analcite 306, 378
See also Weed and Pirsson.
Pirssonite 200
Pisani, F., analysis of spinel 280
See also Saemann and Pisani.
Page.
Pisolite 473
Pistomesite 490
Pitchblende 613
Pitch coal 624, 625
Plagionite 585, 586
Planetesimal hypothesis 51, 52, 108
Plata River, analyses of water 74, 83
Platiniridium 608
Platinum, distribution 18
in igneous rocks 271
ore of 607–611
Platte River, analyses of water 56, 67
Plattensee, analysis of water 80
Plattnerite 586
Plauchud, E., reduction of sulphates by microbes 496
Playa lakes 189
Playfair, L., colliery gases 663
Pleonaste 280, 281
Plombières, action of hot waters at, on brick 166
analyses of waters cited 166
Plumbogummite 590
Plumbojarosite 588
Podolite 293
Poeschl, V., fusion of mineral mixtures 252
Pollard, W. *See* Clough and Pollard.
Pollanite 455
Polonium 615
Polyargyrite 562
Polybasite 562
Polydymite 599
Polyhalite 178, 181
Polylithionite 326
Polymethylenes 622
Popocatepetl, water from 156
Popoff, L., gas from river mud 633
Popoff, S. P. *See* Vernadsky and Popoff.
Popovici, Saligny and Georgesco, water analysis 132
Popp, O., boron nitride 197
water analysis 82
Porcher, S., electrum 555
Porter, F. B. *See* Bailey, E. H. S.
Porter, J. L., analysis of water 64
Porter, J. T., fuller's earth 431
Pošepný, F., atmospheric transport of salt 48
lateral secretion 542, 543
heavy metals in waters 546, 547
ore deposits 541
Posewitz, T., asphalt and petroleum 627
Potassium, distribution 19
proportion of, in ocean 106, 107
Potassium nitrate. *See* Saltpeter.
Potassium salts, absorption by clays 107, 166
Potomac River, analysis of water 63
flow of 64
Potonié, H. origin of petroleum 638
Pouget, I., artificial pyrargyrite 562
Powder River analysis of water 70
Powellite 605

Page.
Power, F. D., nickel ores 603
Pozzuoli, analysis of solfatara water 156
Praseodymium 19
Praseolite 340
Pratt, J. H., chromite deposits 282, 605
corundum 278
gaylussite, northupite, pirssonite 200
occurrence of spinel 281
origin of talc 349
talc 522
See also Hidden and Pratt; Penfield and Pratt.
Pratt, J. H., and Lewis, J. V., chromite deposits 605
Pratt, J. H., and Sterrett, D. B., tin deposits 594
Pratt, N. A., phosphate rock 450
Precht, H., cited, on Stassfurt salts 176
on langbanite 178
Precht, H., and Wittjen, B., kieserite 181
Predazzite 489, 490, 539
Prehnite rock 539
Pretoria salt lake, analysis of water 133, 136
Price, T., water analysis 70
Priceite 200
Priestley, J., gases in rocks 224
Primero, Rio, analysis of water 74
Pring, J. N., and Hutton, R. S., synthetic hydrocarbons 629
Prior, G. T., dundasite 586
riebeckite rocks 323
teallite, etc 591
See also Hussak and Prior.
Prior, G. T., and Spencer, L. J., cerargyrite group 564
Prismatine 316
Prochlorite 331
Prost, E. *See* Spring, W.
Proustite 562, 563
Prowersose 372
Przibylla, C., formation of carnallite 180
Pseudoboleite 587
Pseudobrookite 287
Pseudogaylussite 123
Pseudoleucite 307
Psilomelane 455
Psittacinite 590
Pteropod ooze 101, 436
Ptilolite 350
Pucherite 612
Puiggari, M., cited 74
Pulaskose 370, 378, 383
Pulgar, P. del. *See* Calderon, C. S., etc.
Pumpelly, R., native copper 565
sedimentation 432
Purington, C. W., Uralian platinum 609
Pyramid Lake, analysis of water 122
Pyrargyrite 562, 563

Page.
Pyrite 222, 271–273
Pyrocatechin 668
Pyrochroite 455
Pyrolusite 455
Pyromorphite 589, 590
Pyrope 334–337
Pyrophanite 286
Pyrophyllite 417, 522, 527
Pyrostilpnite 562
Pyroxene 311–318, 508
Pyroxenite 390, 391
Pyrrhotite 222, 271–273, 600, 601

Q.

Quadrat, B., analysis of spinel 280
Quartz 294–300
gaseous inclusions in 224
melting point 240
volatility of 223
Quartz-alunite rock 421
Quartz-diaspore rock 421
Quartz diorite 381, 382
Quartz monzonite 380
Quartz porphyry 366–368
Quartz trachyte 366
Quartzine 295
Quartzite 523, 524
Quayle, W. O. *See* Maybery and Quayle.
Quensel, P. D., formation of quartz and tridymite 297
Quincy mine, analysis of water from 144

R.

Radioactivity 152, 259, 615, 618
Radiolarian ooze 101, 436
Radium 19, 259, 260, 615, 616
Radominsky, F., synthesis of monazite and xenotime 293
Ragsky, F., analysis by 151
Rainfall 44–48, 53
Raken, M. *See* Cohen, E.
Rakusin, ——, petroleum 639
Ramage, H. *See* Hartley, W. N.
Ramirite 613
Rammelsberg, C., composition of tourmaline 346
Rammelsbergite 599
Ramsay, Sir W., composition of the atmosphere 38
sedimentation 429
Ramsay, W., and Travers, M. W., argon and helium in minerals 225
Ramsay, W. (of Helsingfors), and Illiacus, A., monazite in pegmatite 294
Ramsay and Hunter, sintering of silica 299
Rangeley Lake, analysis of water 62
Ransome, F. L., chert 465
glaucophane schist 509
lawsonite 345
See also Hillebrand and Ransome.

Page.
Ransome, F. L., and Palache, C., lawsonite 345
Rath, G. vom, anorthite in marble 538
sublimed silicates 223
sulphur deposits 497
Rathite 585
Rayleigh, Lord, hydrogen in atmosphere 41
Raymond, R. W., uintaite 625
Read, T. T., copper sulphide 569
phase rule 250
platinum 611
Reade, T. M., chemical denudation 89, 90
radium and geology 260
Realgar 215, 221, 595, 596
Rectorite 527
Red clay, oceanic 101
Red Lake, analysis of water 130, 135
Red River (Louisiana), analysis of water 69
Red River of the North, analyses of water 71
Red Sea, analyses of water 95
Redingtonite 604
Redwood, B., formation of petroleum 637
Reese, C. L., solubility of calcium phosphate 443
Refdanskite 603
Regnault, V., oxygen of the atmosphere 39
Reich, A., synthesis of sillimanite 343
of topaz 342
See also Stutzer, A.
Reichardt, E., analysis of bittern 186
Reichardtite 178
Reichert, F., Argentine borates 202
Reid, C., and Scrivenor, J. B., cassiterite 592
Reid, W. F., Argentine nitrates 208
Reinders, G., bog-iron ore 452, 454
Reindl, J., cited 73
Reinitzer, B., trona 192
Reiset, J., carbon dioxide in air 42
Reiss, E. R., eclogite 516
Reiter, H. H., fusion of mineral mixtures 252
Reitinger, J. *See* Hussak and Reitinger.
Remingtonite 602
Renard, A. F., phthanite 464
phyllites 530
See also Murray, J.
Renard, A. F., and Cornet, J., phosphorite 448
Renault, B., cannel coal 655
peat 647
micro-organisms in coal 666
See also Bertrand and Renault.
Rennie, E. H., vanadium in clay 612
Republican River, analysis of water 68
Retgers, J. W., constitution of pyroxenes 318
minerals in sand 427
Reuss, A. E., sand in barite 461
Reuter, M. *See* Treadwell, F. P.

Page.
Reyer, E., volcanism 232
Reyes, Rio de los, analysis of water 74
Rezbanyite 585
Rheineck, H., composition of tourmaline 346
Rhine River, analysis of silt 429
analyses of water 77, 83
Rhodium 18, 607–611
Rhodium gold 607
Rhodochrosite 490
Rhodonite 314
Rhodusite 322
Rhoenite 323
Rhone, River, analysis of water 76
Rhyolite 366, 367
fusibility 245, 246
Riban, J., synthesis of cerussite 587
Ricciardi, L., vanadium in lava 611
Richards, Ellen S., chlorine maps 47
Richards, R. H. *See* Day and Richards.
Richardson, C., asphalt 626, 627
Richardson, C., and Wallace, E. C., Texas petroleum 622
Richardson, G. B., natural gas 620
sulphur deposits 497
tin deposits 594
waters of Utah 119
Richardson, T., barytic deposit 498
Richmond, H. D. *See* Pappe, A.
Richterite 319
Richthofen, F., loess 432
Rickard, E., tin deposits 594
Rickard, F., tungsten ores 607
Rickard, T. A., precipitation of silver 559
solution and deposition of gold 557, 558
Rickardite 567
Riebeckite 322, 323
Ries, H., alteration of pyroxenes 318
clays 431
limestones 478
peat 648
zincite 580
Riggs, R. B., analyses by 381, 430, 431, 432, 433, 492, 514, 524, 534
Rinne, F., reactivity of quartz 300
Rio Grande, analysis of water 69
Rising, W. B. *See* Le Conte and Rising.
Ritter, A., nature of earth's interior 52
Rivas, S., cited 74
Roberts, J. *See* Anderson and Roberts.
Roberts, M. G. *See* Dole, R. B.
Roberts-Austen, W. C., melting points of minerals 239, 240
Robinson, A. C., and Mabery, C. F., analysis by 144
Robinson, F. C., analyses of water 62
phosphoric acid in beryl 347
Robertson, J. D., heavy metals in rocks 543, 582
precipitated zinc sulphide 579

Robertson, J. D., zinc deposits	[illegible]	[illegible]	480
Rockbridge Alum Spring, analysis	[illegible]	[illegible]	
Rock River, analysis of water	[illegible]	[illegible]	112, 117
Rodzyanko, A., cited	[illegible]	[illegible]	18, 607-611
Roeblingite	[illegible]	[illegible]	260
Roepperite	[illegible]	[illegible]	288, 290
Roessler, F., synthesis of arguite	[illegible]	[illegible]	464
of galena and chalcocite	[illegible]	[illegible]	605
Rössler, H., platinum in silver million	[illegible]	[illegible]	577
Röttisite	[illegible]		
Rofe, J., cannel coal	[illegible]		
Rogers, A. F., alterations of [illegible] riebeckite rocks	[illegible]	[illegible]	78
Rogers, W. B. and R. E., solubility of minerals	[illegible]	[illegible]	620
Rohland, P., plasticity of clays	[illegible]	[illegible]	209
Romburgh, P. van, analysis by	[illegible]	[illegible]	[illegible]
Romeite	[illegible]	[illegible]	[illegible]
Roncegno, analysis of water from	146, 147	[illegible]	[illegible]
Rondet, J., sulphosalts of lead	[illegible]	[illegible]	621
Roozeboom, H. W. B., phase rule	[illegible]	[illegible]	[illegible]
Roscoe, H. E., mottramite	[illegible]	[illegible]	[illegible]
Roscoelite	328, 411, 412	[illegible]	[illegible]
Rose, G., fusion of limestone	[illegible]	[illegible]	449
synthesis of tridymite	[illegible]	[illegible]	174
uralitization	[illegible]	[illegible]	
Roselite	[illegible]	[illegible]	
Rosen, F., alteration of dolomite	[illegible]	[illegible]	328
Rosenbach, O., volcanic nitrogen	[illegible]	[illegible]	
Rosenbusch, H., chloritic [illegible]	[illegible]	[illegible]	61
classification of igneous rocks	[illegible]	[illegible]	62
epidotization	[illegible]	[illegible]	74, 126
garnet and prehnite rock	[illegible]	[illegible]	[illegible]
glaucophane rocks	[illegible]	[illegible]	
gneiss	[illegible]	[illegible]	97
order of deposition of minerals	[illegible]	[illegible]	
succession of minerals in igneous rocks	[illegible]	[illegible]	314
venanzite	[illegible]	[illegible]	[illegible]
***See also* Hunter and Rosenbusch.**		[illegible]	142
		[illegible]	184, 185
Rosenbuschite	[illegible]	[illegible]	177, 178
Rosenlecher, R., mercury deposits	[illegible]	[illegible]	
Rosiwal, A., physical analysis of rocks	[illegible]	[illegible]	87
		[illegible]	[illegible]
Ross, O. C. D., origin of petroleum	[illegible]	[illegible]	[illegible]
Rossel, H., carbide theory of [illegible] canism	[illegible]	[illegible]	[illegible]
Roth, J., predazzite	[illegible]	[illegible]	[illegible]
Rothpletz, A., oolitic sand	[illegible]	[illegible]	[illegible]
Roumania, salt lakes of	[illegible]	[illegible]	[illegible]
Rousseau, G., artificial diamond	[illegible]	[illegible]	[illegible]
Roux, ——, water analysis cited	[illegible]	[illegible]	[illegible]
Rowlandite	[illegible]	[illegible]	[illegible]
Rubidium, distribution	[illegible]	[illegible]	[illegible]
in sea water	[illegible]	[illegible]	[illegible]
Ruff, O., iron hydroxides	[illegible]	[illegible]	[illegible]
Rumbold, W. R., tin deposits	[illegible]	[illegible]	[illegible]
Rumpfite	[illegible]	[illegible]	[illegible]
Russ, F., aluminum hydroxides	[illegible]	[illegible]	[illegible]
Russell, I. C., adobe soil	[illegible]	[illegible]	[illegible]
calcareous tufa	471	[illegible]	[illegible]
disintegration of rocks	[illegible]	[illegible]	[illegible]
gypsum	[illegible]	[illegible]	[illegible]
Lake Lahontan	[illegible]	[illegible]	[illegible]

Page.
Sarasin, E. *See* Friedel and Sarasin.
Saratoga waters, analyses 144, 145
Sardeson, F. W. *See* Hall and Sardeson.
Sarkinite 598
Sartorite 585, 586
Saskatchewan River system 71
Sassolite 196
Sauer, A., alteration of leucite to analcite 307
graphitoid 657
kryptotile 527
Saussurite 341, 512, 513
Savage, T. E., peat 648
Savu-Savu Spring, analysis of 144
Saxonite 390, 391
Saxony, mineral waters of 151
Saytzeff, A., Uralian platinum 609
Scacchi, A., fluorite on lavas 274
leucite pseudomorphs 307
sublimed silicates 223
Vesuvian sublimates 221
Scandium 19
Scapolite 337–339
Scapolite rocks 514, 515
Scarpa, O., radioactivity of lava 259
Schafhaütl, P., synthesis of quartz 295
Schaller, W. T., analyses by 530
formula of dumortierite 345
molybdic ocher 605
Schaller, W. T., and Hillebrand, W. F., lawsonite 345
See also Hillebrand and Schaller.
Schapbachite 562, 585
Scharizer, R., composition of tourmaline 346
constitution of hornblende 321
Scheelite 606, 607
Scheerer, T., formation of dolomite 485
of magnesian carbonates 482
Scheererite 624
Schefferite 314
Schenck, A., chloritization 518
copper ores 568
epidotization 341, 515, 516
Schertel, A., melting points of minerals 238
See also Stelzner and Schertel.
Schertelite 444
Schickendantz, F., cited 189
Schiebe, O., gold in olivine rock 553
Schilling, J., distribution of thorium 617
Schinnerer, L., and Morawsky, T., pyrocatechin from lignite 668
Schirmerite 562, 585
Schlagintweit, H. von, Tibetan borax 202
Schlösing, C., sedimentation 429
Schloesing, T., ammonia in atmosphere 46
ammonia in sea water 92
analyses of sea water 94
oceanic carbonic acid 112
plasticity of clays 425
Schloesing, T., solubility of calcium carbonate 98
solubility of calcium phosphate 442
tropical soils 423
Schmeick, L., analyses by 94, 371, 372
marine clays 107
marine muds 438
Schmidt, C., chamosite 494
sericitic rocks 511
Schmidt, C. (Dorpat), water analyses 81, 94, 95, 128, 130, 132
fumaroles of Monte Cerboli 196, 197
Schmidt, R. E. *See* Lunge, G.
Schmidt, W. B., action of sulphurous acid on rocks 408
Schmitz, E. J., copper in fossil wood 566
Schmutz, K. B., artificial scapolite rock 338
formation of tridymite 296
fusion of mineral mixtures 252
Schnarrenberger, C., analyses by 539
Schneider, E. A., analyses by 162, 390, 412, 463, 466, 524
See also Barus, C.; Clarke and Schneider.
Schneider, J., water analysis 132
Schneider, K., origin of perofskite 288
Schneider, R., cubanite 567
precipitation of silver sulphide 561
synthesis of emplectite 570
of wittichenite 570
of greenockite 578
of matildite 563
Schödler. *See* Petersen and Schödler.
Schoeller, water analyses 74
Schoenite 178
Schorlomite 335
Schrauf, A., kelyphite 336
mercury ores 576, 577
mine waters 546
serpentine from garnet 520
Schreibersite 269
Schreiner, O., and Failyer, G. H., absorbent power of soils 425
See also Kahlenberg, L.
Schröter. *See* Früh and Schröter.
Schrötterite 527
Schüler, E., synthesis of greenockite 578
Schüler, G., chromium in a phosphate 446, 447
Schützenberger, P., volatility of silica 223
Schulten, A. de, synthesis of analcite 305
synthesis of gibbsite 421
of lanarkite 588
of laurionite 587
of malachite 572
of molybdenite 605
of northupite and tychite 200
of phosgenite 587
Schultze, H., synthesis of wulfenite 589
Schulze, H., and Stelzner, A., artificial tridymite 296
artificial willemite 581
Schumacher, A., cited 434
Schuylkill, Lake, analysis of water 131, 136

Page.
Schungite 657
Schwager, A., analysis by 441
on the waters of Bavaria 78, 79, 80
Schwantke, A., artificial tridymite 296
osteolite and staffelite 443
Schwartz, E. H. L., African hot springs 168
Schwartzembergite 587
Schweig, M., magmatic differentiation 258
Schweinfurth, G., and Lewin, L., origin of alkaline carbonates 194
Schweitzer, P., analyses by 142, 146, 149, 150
Scolecite 349
Scorodite 596
as a spring deposit 163, 164
Scrivenor, J. B. *See* Reid and Scrivenor.
Seal, A. N., ozokerite 625
Seamon, W. H., analyses by 555
tallow clays 583
Secondary enrichment 552, 569
Sedimentary rocks 459–500
average composition 27, 30, 31
volume of 28–31
Sedimentation 429, 430
Seidell, A., water analysis 70, 120
See also Cameron and Seidell.
Seine, River, analysis of water 76
Selenite. *See* Gypsum.
Selenium, distribution 19
Selensulphur 220
Semper, E., and Blanckenhorn, M., origin of nitrates 209
Semper and Michels, Chilean nitrates 206
Semseyite 585
Senarmont, H. de, precipitation of silver 559
reduction of copper 566
synthesis of chalcopyrite 567
of pyrargyrite and proustite 562
of pyrite 272
of quartz 295
of realgar, stibnite and bismuthinite 596
of sphalerite 578
sulphides of cobalt and nickel 599, 600
Senarmontite 598
Senderens, J. B. *See* Sabatier and Senderens.
Sericite 326, 510–512
Serpentine 348, 519–523
Sestini, F., solubility of minerals 403
Sevier Lake, analysis of water 120
deposits from 188
Seybertite 327
Shale 467–469
average composition 27, 30
Shaler, N. S., bog iron ore 452
peat 645
phosphorite 449
soils 431
Shales, metamorphosed 524–525
Sharples, S. P., coral 476
phosphate rock 444
solubility of calcium phosphate 442
Sharpless, F. F. *See* Lane and Sharpless.
Sheep Creek, analysis of water 72
Shepard, C. U., phosphate rock 445
Shepard, C. U., jr., phosphate rock 444
Shepherd, E. S. *See* Day and Shepherd.
Sherzer, W. H., celestite 497
Shiraz, salt lake near, analysis of water 130, 134
Shoal Creek, analysis of water 146, 147
Shonkinite 371, 372
Shonkinose 372
Shoshonose 380, 383, 384, 385
Sibirtzew, N., soils 431
Sickenberger, E., formation of petroleum 636
origin of alkaline carbonates 194
Sidener, C. F., analyses of water 64, 65, 66, 71, 141
Siderite 351, 452, 490–492
Siderophyllite 327
Sidot, T., synthesis of galena 584
synthesis of greenockite and wurtzite 578
of magnetite 283
of troilite 272
of zincite 580
Siebenthal, C. E., limestone 478
marl 472
Siedentopf, H., color of salt 185
Siemens, E. W. von, volcanic explosions 236
Siepmann, P., constitution of coal 667
Siewert, M., water analysis 74, 126
Silber, P. G. *See* Gorgeu and Silber.
Silica, in river waters 84
in sea water 92
volatility of 223
Silicates, hydrolysis of 151
solubility of 100, 102
Siliceous sinter 161, 162, 163, 164, 465
Silico-azo-humic acid 83
Silicon, distribution 19
Sillimanite 343, 344, 527, 528
Sillimanite schist 530
Silt 428, 430
Silva, A. F. de, and d'Aguiar, A., fluorine in spring waters 149
Silver, distribution 19
in native copper 565
in sea water 93
in volcanic ash 221
occlusion of oxygen by 235
ores of 558–564
Silver Islet, analysis of water from 144
Silver, L. P., nickel deposits 601
Silvestri, O., fluid inclusion in sulphur 497
hydrocarbons in lava 230, 231, 632
iron nitride 222

Page.
Silvestri, O., volcanic gases 216
Simmersbach, B., and Mayr, F., nitrate deposits 207
Simpson, E. S., native tin 591
Singer, M., constituents of wood 643
Sinter, barytic 160, 498
Sinter, calcareous 159, 160
Sinter, ferruginous 491
Sinter, siliceous 161, 162, 163, 164, 465
Sipöez, L., analysis by 441
krennerite 555
Siserskite 607
Sjögren, H., bog-iron ore 452
fluid inclusion in sulphur 497
vesuvianite 337
Sjollema, B., perchlorates in soda niter 208
Skeats, E. M., acid water from sulphur beds 497
Skeats, E. W., coralline limestone 476
magnesia in coral reef 487
phosphate rock 451
Skey, W., analyses by 142, 149, 153, 156
awaruite 269
gold sulphide 554
precipitation of gold 558
of silver sulphide 561
solvents of gold 557
Skinner, W. W., underground waters of Arizona 154
See also Forbes, R. H.
Skutterudite 599
Slate 467–469, 524, 525
Sloan, E., clays 431
Slosson, E. E., water analyses 67, 126
Smaltite 599, 601
Smart, C., water analyses 119
Smith, A. W. *See* Mabery and Smith.
Smith, B. H. *See* Haywood, J. K.
Smith, E. A., phosphate rock 450
Smith, F. D., tungsten ores 607
Smith, G. O., molybdenite 606
Smith, J. L., analysis by 145
native iron 268
Smith, J. P., eclogite 517
glaucophane rocks 323, 509
lawsonite rocks 345
Smith, R. A., oxygen of the atmosphere 39
peat 645
Smith, Watson, resins in lignite 651
Smith, W. S. T., zinc deposits 583
See also Ulrich and Smith.
Smithite 562
Smithsonite 580, 581
Smoky Hill River, analysis of water 68
Smoot, L. E., analysis by 155
Smyth, C. H., alteration of pyroxene 313, 314
Clinton iron ores 453
corrosion of quartz 300
losses of atmospheric oxygen 51
melilite rocks 334
talc 349, 521, 522
Smyth, H. L., iron ores 284

Page.
Snake River, analysis of water 70
Soap Lake, analysis of water 125, 137
Soda Lake, soda from 191
Soda Lakes, analyses of water 123, 137
Sodalite 309–311
Sodalite syenite 378
Soda niter 200, 202, 206–208, 211
Sodium, distribution 19
metallic, in salt 185
sulphate deposits 186, 187, 188
Sodium chloride, in rainfall 47
See also Salt.
Soellner, J., rhoenite 323
Soils 415, 416, 417, 423, 424, 431
Sokoloff, N. V., origin of petroleum 632
Sollas, W. J., chert and flint 465
order of deposition of minerals 252
quartzite 524
radium and geology 260
Solomon River, analysis of water 68
Soltmann, R., melanite 335
Solubility of minerals 403–408
Sommerfeldt, E., classification of igneous rocks 358
Sommerlad, H., synthesis of chalcostibite 570
synthesis of sulphosalts 563
sulphosalts of lead 586
Sommermeier, E. E., coal analyses 650, 653, 656
Sondén, K., cited 45
Sonnenschein, F. L., amalgam 555
Sonstadt, E., caesium and rubidium in sea water 92
gold in sea water 93
iodine in sea water 91
Sorby, H. C., calcite and aragonite 473
formation of magnesium carbonate 482
of siderite and limonite 490
magnesium sulphate in gypsum 481
shale 469
Soret's principle 254
Souesite 269, 270
Spaeth, E., water analysis 77
Spalding, E. P., Terlingua mines 573
Spaulding, H. S. *See* Barr, W. M.
Spencer, A. C., magmatic waters 168, 547
Spencer, Herbert, nature of earth's interior 52
Spencer, J. W., bauxite 420
Spencer, L. J., jamesonite 586
tellurides 555
See also Prior and Spencer.
Sperry, F. L. *See* Penfield and Sperry.
Sperrylite 607, 610, 611
Spessartite 335, 336
Spezia, G., formation of quartz and opal 299
solubility of quartz 406
sulphur deposits 496
Sphærite 443
Sphærocobaltite 602
Sphalerite 578–584
Sphene 288
Spiegel, L., fichtelite 598

Page.
Spielmann, P., jet 649
Spilker, A. *See* Krämer and Spilker.
Spinel 578–584
Spirek, V., mercury ores 577
Spodumene 315, 594
Spreustein 311
Spring, W., argentite formed by pressure 560, 561
coloration of clay 432
compression of chalk 477
of peat 663
humus and iron in waters 453
precipitation of organic matter by iron 430
sedimentation 429
Uralian platinum 609
Spring, W., and Prost, E., water of the Meuse 75, 90
Springs, potable, analyses of 57
Spurr, J. E., alaskite and tordrillite 366
borates 199
dolomitization 488
glauconite 492
iron ores 491
magmatic quartz veins 554
ore deposits 541, 548
primary pyrrhotite 273
scapolite rocks 515
succession of igneous rocks 256
Srebenica, spring, analysis 146
Staffelite 443
Stahl, A. F., origin of petroleum 638
Stahl, W., on Karaboghaz 127
Stanley, F. C. *See* Penfield and Stanley.
Stannite 591
Stapff, F. M., bog-iron ore 452
Stassfurt salts 176–182
Staurolite 344, 345, 528, 529
Steamboat Springs, analysis of 145
Steatite 349, 522
Stecher, E., carbide theory of volcanism 230
Steenstrup, K. J. V., graphite in basalt 267, 268, 269
Steiger, G., analyses by 70, 125, 144, 150, 159, 161, 185, 374, 382, 389, 427, 432, 438, 450, 468, 479, 488, 489, 492, 493, 514, 522, 530, 531
solubility of minerals 405
See also Clarke and Steiger.
Stein, G., formation of quartz 297
fusion of quartz and silicates 240
Stein, S., artificial coal 664, 665
Steinmann, G., precipitation of calcium carbonate 472
Stella, A., nickel-iron 269
See also Franchi and Stella.
Stelzner, A., artificial gahnite 581
associates of perofskite 288
Bolivian tin ores 591, 595
melilite rocks 334
See also Schulze and Stelzner.
Stelzner, A., and Schertel, A., tin in blende 591
Stelzner, A., and Schulze, H., fayalite in slags 324
Stelzner, A. W., lateral secretion 542, 543
on Rio Saladillo 126
ore deposits 541
Stěp, J., and Becke, F., uranium ores 613
Stephanite 562, 563
Stercorite 444
Sternbergite 562
Sterrett, D. B. *See* Pratt and Sterrett.
Stevenson, J., primitive atmosphere 50
Stibiconite 598
Stibnite 595–597
Stilbite 349
Stilpnomelane 331
Stockvis, C. S. *See* Saltet, R. H.
Stöber, F., synthesis of cotunnite 587
Stokes, H. N., analyses by 27, 57, 148, 367, 368, 370, 372, 373, 376, 379, 380, 385, 388, 389, 398, 463, 468, 479, 510, 526, 531, 535, 546
formation of copper sulphides 569
of sphalerite 582
precipitation of copper 565
of lead sulphide 585
pyrite and marcasite 273
solution and deposition of silver 560, 561
solution of gold 557
tallow clay 583
Stoklasa, J., volcanic nitrogen 222
Stolba, F., on the Moldau 78
synthesis of galena 584
Stolzite 588, 589, 606
Stone, C. H., analyses of water 64, 124
Mississippi silt 428
Stone, G. H., asphalt 625
Storer, F. H. *See* Warren and Storer.
Storms, W. H., borate deposits 200
Strecker, A. and H., gytje 438
Streng, A., bauxite 420
Strengite 443
Strigovite 331
Stromeyer, C. E., effect of pressure on fusibility 238
Strontium, distribution of 19, 498
in sea water 92
Strutt, R. J., radioactivity of rocks 19, 259
Struvite 444
Stubbs, W. C., phosphate rock 450
Stutzer, A. and Hartleb, R., bacterial decomposition of cement 410
Stutzer, A., and Reich, A., water analysis cited 129
Stutzer, O., cobalt ores 598
kaolinite 410
magnetites of Lapland 284
Stutzite 582

Page.
Stylotypite 569
Suess, E., vadose and juvenile waters 168
volcanic additions to oceanic salts 109
Sullivan, E. C., copper sulphides 569
deposition of copper 572
partial analysis by 438
Sullivan, G. *see* Kastle, J. H., etc.
Sulphates, reduction by microorganisms 87, 116, 438, 496
Sulphates in sea water 106, 107
Sulphoborite 180, 202
Sulphohalite 199
Sulphur, distribution 20
in atmosphere 41
in petroleum 624
Sulphur, native 177, 220, 495, 496, 497
Sulphur Bank, analyses of waters from 154
Sulvanite 613
Sungi Pait, Brook, analysis of water 156
Superior, Lake, analysis of water 61
Susquehanna River, analysis of water 63
Svanberg——analyses by 608
Svedmark, E., uralitization 508
See also Törnebohm and Svedmark.
Svendsen, S., analyses of dissolved air 111
Sweden, rivers of 81
Swinton, A. A. C., occlusion of gases by glass 226
Switzerland, lakes of 76
Syenite 370–373
Syepoorite. *See* Jaipurite.
Sylvanite 555
Sylvinite 179
Sylvite 179, 180, 181, 182
Syngenite 181
Syntagmatite 321
Syracuse, N. Y., brine, analyses of 141
Szabó, J., primary lolite 339
Szádeczky, J. von, bauxite 420
Szajnocha, ——, origin of petroleum 635

T.

Taal Volcano, analyses of water from 156
Tachhydrite 178, 180
Tacke, B. *See* Minssen and Tacke.
Tagar, Lake, analysis of water 131, 135
Tahoe, Lake, analysis of water 122
Takano, S. *See* Mabery and Takano.
Talbot, J. H. *See* Binney and Talbot.
Talc 349, 519–523
Tallow clay 583
Talmage, J. F., water analyses 119
Tamentica, Lagoon, analysis of water 126, 135
Tanatar, S., origin of alkaline carbonates 194
Tantalite 616
Tantalum 20
sources of 616, 617
Tapajos, River, analysis of water 73, 83
Tapalpite 562
Tappeiner, H., formation of marsh gas 633, 634
Tasmanite 650
Tate, N., analysis of water 61
Taylor, F. W., analysis by 184
Taylor, H., analysis of cannel 654
Taylor, R. A., cited 108
Taylor, W. H., analysis of water 63
Teall, J. J. H., classification of igneous rocks 358
dedolomitization 538
eutectic mixtures in rocks 248, 249, 356
origin of serpentine 348
phosphatized trachyte 444
the Scourie dike 507, 508
Teallite 586, 591
Téhamose 367
Teisseyre, W. *See* Mrazec and Teisseyre.
Tekir-Ghiol, Lake, analysis of water 132, 134
Tellurides 555, 556, 567, 573, 584, 595, 599
Tellurium, distribution 20
in copper 567
Tengerite 618
Tennantite 562, 570
Tenorite 221, 571
Tephroite 324
Terbium 20
Terlinguaite 573
Termier, P., lawsonite 345
leverrierite 527
optical variations in zoisite 340
riebeckite rocks 323
Terrell, A., artificial dolomite 481
native platinum 608
water analyses 129
Tetradymite 595
Tetrahedrite 562, 570
Thallium, distribution 20
Thames, River, analysis of water 76, 83
Than, C. von, ionic statement of water analyses 54
Thenard, P., azohumic acid 409
silico-azo-humic acid 83
Thenardite 187, 199
Theralite 375
Thermonatrite 191
Thiele, F. C., Texas petroleum 622
Thinolite 122, 123
Thiophanes 624
Thiosulphates in spring waters 152
Thorite 617
Thorium, distribution 20
sources of 617
Thorogummite 618
Thorpe, T. E., analyses by 143, 145, 146
Thorpe, T. E., and Morton, E. H., analysis of sea water 94
Thoma, ——, gases in iron 23A

Page.
Thomas, J. W., gases in coal 660, 661, 662, 663
Thomas, P., phosphorite 448
Thompson, A. B., formation of bitumens 638
Thomson, J., thermochemistry of sulphides 561
Thomsonite 349
Thoulet, J., chert 465
desert sand 427
lakes of the Vosges 76
sedimentation 429
solubility of calcium carbonate 98
of silicates 102
Thresh, M., manganese nodules 455
Thürach, H., occurrence of zircon and titanium minerals 290, 292
Thugutt, S. J., alteration of corundum 278, 406
composition of sodalite 309, 310
gibbsite and diaspore 422
leucite and analcite 305, 306
Thullum 20
Thuringite 331, 493
Tiemannite 573
Tietze, E., atmospheric transport of salt 48
Tietze, O., phosphorite 448
Tilden, W. A., gases in rocks 225, 226
Tin, distribution 20
ores 591–595
Tinetzky Lake, analysis of water 128, 136
Tinguaite 373, 376, 378
Tinstone. *See* Cassiterite.
Titanite 288
Titanolivine 324
Titanium, distribution 20
Törnebohm, A. E., melilite rocks 334
Törnebohm, A. E., and Svedmark, E., scapolite rocks 514
Törnebohm, A. S., enlargement of quartz grains 460
Tolman, C. F., jr., oceanic carbonic acid 114
Tolomei, G., iron bacteria 453
Tonalite 384
Tonalose 382, 388
Tookey, C., analyses by 646, 649, 651
Topaz 342, 344
Torbanite 637
Ternoe, H., density of sea water 96
analyses of dissolved air 111
Torrico y Meca, vanadium in coal 612
Torrey, J. *See* Barbour and Torrey.
Toscanose 367, 368, 369, 280
Tourmaline 346, 347
Tourmaline schist 532, 533
Trachyte 370–371
Transition temperatures 242
Transvaalite 602
Traphagen, W., cited 66
Traube, H., sublimation of minerals 223
synthesis of beryl 347
of rutile 289
wurtzite as furnace product 578

Page.
Traube, H., zincite 580
See also Bourgeois and Traube.
Traunsee, analysis of water 80
Travaglia, R., formation of sulphur deposits 496
Travers, M. W., gases from meteorites 234
gases from minerals and rocks 225, 226
Travertine 159, 160, 471, 481
Treadwell, F. P., and Reuter, M., solubility of calcium bicarbonate 99
Trechmann, C. O., pseudogaylussite 123
Tremolite 318–319
melting point 240
Tridymite 294–300
Trinkerite 650
Triphylite 593
Triphyite 598
Trobridge, F. G., gases in coal 663
Troilite 271, 272
Trona 191, 192, 193, 199, 200
Troost, L. *See* Deville and Troost.
Troost, L., and Hautefeuille, P., gases in iron 234
Truchot, P., monazite, thorite, and zircon 294
Truckee River, analysis of water 122
Tschermak, G., alteration of atacamite 571
carbon in meteorite 632
constitution of pyroxenes 318
composition of tourmaline 346
gaseous occlusions 234, 235
scapolite group 337, 338, 514
serpentine 519
theory of chlorites 331, 332
of micas 328
Tschirwinsky, W., podolite 293
Tsuneto, K., Japanese phosphates 451
Tucker, G. P. *See* Pemberton, H.
Tufa, barytic 160
Tufa, calcareous 471
Tulare Lake, analyses of water 124, 137
Tungsten, distribution 20
ores 605–607
Tungstic ocher 606
Tuolumnose 370
Turgite 451
Turner, H. W., California diamonds 265
quartz-alunite rock 421
Turquoise 443
Tuscarora sour spring, analysis 155
Tyrolite 570
Tychite 200
Tyrrell, J. B., native iron 270
Tysonite 274

U.

Uintaite 624, 625
Ule, W., the Mansfelder lakes 80
Ulexite 198, 199, 201, 202, 203
Ulke, T., tin deposits 594
Ullik, F., on the Elbe 78
Ullmannite 500

Page.
Ulrich, E. O. *See also* Hayes and Ulrich.
Ulrich, E. O., and Smith, W. S. T., fluorite, 500
Ulrich, G. H. F., awaruite 269
Umangite 567
Umlauff, A. F., mercury deposits 577
Umptekose 374
Unakite 265, 516
Uralite 319, 508
Uralitization 507, 508
Uralose 393
Uraninite 613–615
Uranium, distribution 20
ores of 611–616
Urao. *See* Trona.
Urbain, G., rare earths in fluorite 274
Urmi, Lake, analysis of water 130, 134
Urtite 374, 376
Urtose 374, 375
Uruguay River, analysis of water 74, 83
silica in 84
Usiglio, J., concentration of sea water 173, 174, 175
Ussing, N. V., alteration of arfvedsonite 323
Utah, waters of 119
Utah Hot Springs, analysis 142
Utah Lake, analyses of water 120
Uvaldose 387
Uvarovite 335

V.

Vaalose 389
Vadose waters 168
Valentin, J., fluorite 500
Valentine, W., analysis by 398
Valentinite 598
Van, Lake, analysis of water 130, 137
Vanadinite 589, 590
Vanadium, distribution 21
in bauxite 423
ores of 611–616
Van Hise, C. R., actinolite magnetite schist 319
alterations of corundum 280
of hematite 286
amount of carbon dioxide in atmosphere 43
average composition of clays, schists, etc 534, 535
ferruginous schists 526
fineness of sand particles 467
formation of iron ores 491
magmatic quartz veins 554
magmatic waters 547
mica schist 531
ore deposits 541
origin of magnetite 284
porosity of sand 460
quartzite 524
relative proportions of sedimentary rocks 31
volume changes in alteration of minerals 507
Van Hise, C. R., volume of ground water 22
zinc deposits 583
zones in lithosphere 502–505
See also Irving and Van Hise.
Van Horn, F. R., alkali-hornblende 322
Van Nüys, T. C., and Adams, B. F., cited 42
Van Riesen, ——, analysis by 522
Van't Hoff, J. H., geological thermometer 182
on Stassfurt salts 178, 179
syntheses of borates 201
Van't Hoff, J. H., and Barschall, H., on glaserite 178
Van't Hoff, J. H., and Farup, P., marine anhydrite 181
Van't Hoff, J. H., Kenrick, F. B., and Dawson, H. M., tachhydrite 180
Van't Hoff, J. H., and Meyerhoffer, W., on langbeinite 179, 180
Van't Hoff, J. H., and Weigert, F., formation of anhydrite 181
Vanthoffite 178, 179, 182
Van Wagenen, T., soda niter 211
Van Winkle, W. *See* Barr, W. M.
Variscite 443, 446
Varvicite 456
Vasculose 664
Vater, H., alkaline carbonates 194
artificial hematite 285
calcite and aragonite 473
Vaughan, T. W., fuller's earth 431
Vauquelinite 588
Vaux, F., coal analyses 654, 656
Veatch, J. A., boron in sea water 92
Vegetation, as agent of rock decomposition 408, 409
Veins, metalliferous 548–552
Velain, C., artificial tridymite 296
Venable, F. P., on periodic law 35
Venanzite 386
Venanzose 386
Verde-antique 520
Vermiculite 330, 331
Vermilion 574
Vernadsky, W., andalusite, kyanite, sillimanite 528
artificial corundum 278
calcination of dumortierite 346
of topaz 343
formation of sillimanite 343
of spinel 280
fusion of muscovite 330
Vernadsky, W. S., and Popoff, S. P., borax 202
Vernon-Harcourt, L. V., sedimentation 429
Versailles alum well, analysis 146
Vesterberg, A., dolomite and magnesite 484
Vesuvianite 337
Veszelyite 580
Vichy, spring deposits 160
Vichy waters, analysis 149
Vierthaler, A., cited 94

Page.
Viezzenose 374
Villanello, J. D., mercury ores 573
Ville, L., on river Chélif 59
Vinagre, Rio, analysis of water 156
Viola, C., occurrence of lawsonite 345
Violette, ——, charcoal 663, 664
Virginia Hot Springs, analysis 150
Viridite 518
Viry phosphatic water, analysis 154
Vistula River, analysis of silt 429
analysis of water 80
Vivianite 443, 452
Voelcker, J. A., composition of apatite 292
Vogel, H., platinum in metallic ores 610
Vogelsang, H., viridite 518
Vogt, J. H. L., anorthite in slags 301
apatite in slag 293
augite in slags 317
bog-iron ore 452
cassiterite as a furnace product 291, 591
chromite deposits 282, 605
distribution of the elements 26, 37
of vanadium 611
eutectic mixtures in rocks 249
eutectics in classification of rocks 356
formation of hematite 285
of magnetite 283, 284
of pyroxene 314
fusion of garnet 335
gehlenite group 333
magmatic iron ore 257
magmatic pyrrhotite 273, 600
magmatic waters 547
manganese ores 456
melting points of minerals 239, 240
mica in slag 328
native silver 559
olivine in slags 324
on assimilation theory 256
ore deposits 541
platinum in pyrrhotite 611
solubility of sulphides in magmas 251
synthetic enstatite 312
tin deposits 593
wollastonite in slags 313
Vohl, H., water analysis 76
Volt, F. W., nickel deposits 601
Volborthite 612
Volcanic gases 212–236
Volcanic explosions 232–236
Volcanic mud and sand 436, 437
Volcanism, ascribed to radioactivity 259
Vouga, ——, origin of petroleum 637
Vučnik, M., formation of augite 317
formation of hercynite 281
of magnetite 283
fusion of acmite 315
of mineral mixtures 246, 252
Vukits, B., formation of augite 317
formation of magnetite 283
of spinel 281
fusion of mineral mixtures 246, 252

W. Page.
Wabash River, analysis of water 66
Wad 455
Wadsworth, M. E., chromite 281
native copper 565
Wagoner, L., gold and silver in rocks 553
gold in sea water 93
Wait, C. E., antimony deposits 597
Wait, F. G., analyses by 71, 125, 144, 149
Wakarusa River, analysis of water 68
Walchensee, analysis of water 80
Walden, P., origin of petroleum 639
Walker, P. H., analysis by 456
Walker, T. L., magmatic differentiation 257
nickel deposits 600, 601
Walker Lake, analysis of water 122, 137
Walker River, analysis of water 122
Wallace, E. C. *See* Richardson and Wallace.
Wallace, W., sandstones 463
Waller, E., analyses by 119, 281
Wallich, G. C., flint 465
Walther, J., calcareous algae 476
criticism of Ochsenius 175
desert salts 188
origin of graphite 266
laterite 417
Wanklyn, J. A., free iodine in spring water 142
Ward, W. J., analysis by 649, 651
Wardite 443
Warington, R., absorbent power of hydroxides 425
ammonia in rainfall 46
chlorides in rain 47
decomposition of calcium phosphate 443
origin of boric acid 197
sulphur in the atmosphere 41
Warren, C. H., anorthite in limestone 303
iron-anthophyllite 318, 326
minerals in sand 427
See also Hidden and Warren.
Warren, C. M., and Storer, F. H., artificial petroleum 629
Rangoon oil 623
Warrenite 585, 586
Warsaw, N. Y., brine, analysis of 141
Warth, H., classification of igneous rocks 354
gibbsite 419
Warth, H. and F. J., laterite and bauxite 419
Washington, H. S., alteration of biotite 330
analyses by 376, 378, 386, 510
average composition of igneous rocks 24–25
glaucophane rocks 323, 509
leucite in igneous rocks 306, 376
quantitative classification 364, 365
relative abundance of minerals 352
See also Kunz and Washington.
Water, influence of, on magmas 243, 244

Page.
Water analyses, statement of 54–56
Water glass 243
Waters, classification of 134–137, 157, 158
Watson, T. L., bauxite 419, 420
decomposition of diabase 413
manganese ores 456
Virginia rutile 290
zinc deposits 583
Watts, W. L., waters accompanying petroleum 637
Wavellite 443
Way, J. T., absorption of potassium by soils 424
Wayne, E. S., analysis by 142
Weathering, belt of 502
Weber River, analysis of water 120
Websky, J., analyses of peat 645
gas from peat 660
Webskyite 348
Websterite 390
Websterose 390
Wedd, C. B., barytic sandstones 461
Wedding, H., and Fischer, T., gases in iron 234
Weed, W. H., copper ores 568
gold in igneous rocks 271
iron sinter 491
on siliceous sinters 161, 162
ore deposits 541, 548
secondary enrichment 552
tin deposits 594
travertine 471
Weed, W. H., and Pirsson, L. V., alteration of leucite to analcite 307
origin of corundum 278
orpiment and realgar 596
Weeks, F. B., tungsten ores 607
Weeks, J. D., manganese deposits 456
Weems, J. B., lead and zinc in limestones 582
Wehrlite 390, 595
Wehrlose 390
Weibull, M., formula of iolite 339
vesuvianite 337
Weidman, S., iron ores 491
Weigand, B., serpentine 519
Weigel, O., solubility of sulphides 545
Weigert, F. *See* Van't Hoff and Weigert.
Weingarten, P. *See* Jannasch and Weingarten.
Weinschenk, E., constitution of pyrite 273
garnet group 335
nickel ores 601
nontronite 416
origin of graphite 266, 267
serpentine 519
synthesis of apatite 292
of argentite 560
of chalcocite and covellite 568
of cinnabar 575
of galena 584, 585
of orpiment and stibnite 596
Weinschenk, E., sulphides of cobalt and nickel 600
talc pseudomorphs 522
Weiss, K. E., chromite deposit 605
Wellcome, H. S., analysis of salt 184
Weller, A., nitrogen in petroleum 624
Wells, G. M., phosphate rock 450
Wells, H. L., sperrylite 610
Wells, H. L., and Penfield, S. L., sperrylite 611
Wells, J. W., arsenic mine 597
molybdenite 606
Wellsite 350
Wendeborn, ——, mercury deposits 577
Wendt, A. F., tin deposits 595
Wernerite 338
Werveke, L. van, occurrence of chloritoid 330
iron ores 494
Westgate, L. G., epidote-quartz rock 516
metamorphosed limestone 539
Westphal, J., cited, on Stassfurt salts 176
West Baden Spring, analysis 148
Wethered, E. B., oolite 471
Weyberg, Z., synthesis of acmite 315
of sodalite 310
Wheeler, H. A., blende in lignite 579
clays 431
lead silicate 590
See also Luedeking and Wheeler.
Whewellite 644
Whipple, G. C., cited 47
Whitby well, analysis 144
White, A. F., chemical denudation 89
White, I. C., grahamite 625
White Island hot lake, analyses of water 156
White Sea, analysis of water 95
Whitfield, J. E., analyses by 67, 150, 151, 153, 155, 162, 163, 367, 382, 390, 491
Whitney, J. D., zinc deposits 583
Whitneyite 567
Whittle, C. L., ottrelite schist 529
Wibel, E., cited 94
Wichmann, A., alteration of iolite 340
glaucophane rock 509
minerals in sand 427
sericitic rocks 511
Wiegand, E. *See* Beilstein and Wiegand.
Wieland, G. R., siliceous oolite 466
Wiesbaden, analysis of water 143
Wiesler, A., gold in sea water 93
Wilder, F. A., gypsum 185
Wilkinson, C., precipitation of gold 558
Will, W., and Pinnow, J., diamonds in meteorite 264
Willemite 580, 581, 583, 584
Williams, A., gold sulphide 554
Williams, C. P., zinc in waters 546
Williams, F. H., hydrocarbons in iron 627
Williams, G. F., matrix of diamond 265
Williams, G. H., allanite and epidote 341
chloritization 517

Page.
Williams, G. H., corundum, emery, and spinel 278
epidotization 515
occurrence of magnetite 284
of perofskite 287
of pyroxenes 318
of spinel 281
piedmontite in rhyolite 341
saussurite rocks 512, 513
serpentine from peridotite 348
uralitization 507
Williams, I. A., clays 431
micrometric analysis of rocks 399
Williams, J., cited 46, 47
Williams, J. F., bauxite 421
pseudoleucite 307
See also Brackett and Williams.
Willis, B., calcium carbonate as a marine precipitate 99, 471, 472
Willm, E., analyses by 133, 152
Willyamite 599
Wilm, ——, palladium gold 555
Wilmington Lake, analysis of water 126, 137
Wilsmore, N. T. M. *See* Craig, A. W.
Wilson, G. *See* Forchhammer, G.
Wiluite 337
Winchell, A., cosmical atmosphere 49
Winchell, A. N., chalcopyrite and bornite 567
Winchell, H. V., chalcocite 569
Winchell, N. H. and H. V., iron ores 491
Winkler, C., origin of nickel-iron 269
trona 192
uranium in coal 616
Winnemucca Lake, analyses of water 122, 136
Winslow, A., zinc ores 582, 583
Witter, F. M., gas well 633
Wittichenite 569, 570
Wittjen, B. *See* Precht and Wittjen.
Woehler, F., carbon in meteorites 632
gases from meteorites 234
See also Deville and Wöhler.
Woehler, L., and Kasarnowski, color of salt 185
Wöhlerite 317
Wolf, T., volcanic gases 217
Wolfachite 599
Wolfbauer, J. F., water of the Danube 79
Wolff, J., artificial diamond 263
waters of Mecklenburg 80
Wolff, J. E., Franklin zinc ores 584
ottrelite 529
Wolframite 606, 607
Wollastonite 313, 537
melting point 240
Wollastonite gneiss 539
Wolle, C. A., analysis of spinel 280
Wood 642–644
Woodward, R. S., geodetic data 21, 22
Woodward, R. W., analyses by 121, 159, 162, 189, 190, 466

Page.
Wooten. *See* Magnenat and Wooten.
Wright, A. W., gases from meteorites 234
gases in rocks 225
See also Hawes and Wright.
Wright, F. E., crystallized copper and silver 566
See also Allen, E. T.
Wulf, H., scapolite rock 515
Wulf, J., wollastonite rock 313
Wulfenite 588, 589
Wülfing, E. A., composition of tourmaline 346
Wurtz, H., analysis of water 63
huntilite and animikite 560
solvent of gold 557
Wurtzilite 625
Wurtzite 578, 579
Wyomingite 376
Wyomingose 376
Wyrouboff, G., Meigen's reaction 473

X.

Xanthitane 288
Xanthoconite 562
Xanthophyllite 327
Xanthosiderite 451
Xenon 21, 38
Xenotime 293, 294, 618
Xingu, River, analysis of water 73, 83

Y.

Yamasaki, N., piedmontite 341
Yeates, W. S., copper pseudomorphs 565
Yellowstone National Park, analyses of waters 67, 150, 151, 153, 155
spring deposits 159, 161, 162, 163
Yellowstonose 382
Yeneseisk, Siberia, saline lakes 131
Yogoite 380
Young, A. A., enlargement of quartz grains 460
Young, B. R., analcite diabase 307
Young, G. *See* Irvine, R.
Ytterbium 21
Yttrialite 618
Yttrium, distribution 21
sources of 618
Yttrocerite 274
Yttrocrasite 618
Yukon River, analysis of water 70

Z.

Zaleski, S. S., cited 81
Zalinski, E. R., thuringite and chamosite 494
Zaloziecki, R., formation of petroleum 636
mirabilite 181
Zaloziecki, R., and Hausmann, J., Roumanian petroleum 623
Zambonini, F., gehlenite group 333
sublimed galena 222

Page.
Zaracristi, ——, Colombian nitrates 208
Zaratite 602
Zeiller, R., compression of peat 663
paper coal 651
Zelinsky, N., cited 87
Zemčuzny, S., eutectics 356
Zeolites 349–351
Zepharovichite 443
Zietrisikite 624
Zilliacus, A., analysis by 375
Ziliwaukie, brine, analysis of 141
Zinc, distribution 21
in sea water 93
ores of 577–584
Zincaluminite 580
Zincite 580, 583, 584
Zinkenite 585, 586
Zinnwaldite 326
Zircon 291, 292, 617
Zircon pyroxenes 317
Zirconium, distribution 21
sources of 617
Zitowitsch, ——, gases in coal 660
Zoisite 340, 341
Zoisite rocks 513–514
Zorgite 584
Zschimmer, E., alteration of micas 331
Zuber, R., origin of petroleum 634
Zulkowski, K., andalusite group 343
Zurich, Lake of, analysis of water 77

CLASSIFICATION OF THE PUBLICATIONS OF THE UNITED STATES GEOLOGICAL SURVEY.

[Bulletin No. 330.]

The publications of the United States Geological Survey consist of (1) Annual Reports, (2) Monographs, (3) Professional Papers, (4) Bulletins, (5) Mineral Resources, (6) Water-Supply and Irrigation Papers, (7) Topographic Atlas of United States—folios and separate sheets thereof, (8) Geologic Atlas of United States—folios thereof. The classes numbered 2, 7, and 8 are sold at cost of publication; the others are distributed free. A circular giving complete lists can be had on application.

Most of the above publications can be obtained or consulted in the following ways:

1. A limited number are delivered to the Director of the Survey, from whom they can be obtained, free of charge (except classes 2, 7, and 8), on application.

2. A certain number are delivered to Senators and Representatives in Congress for distribution.

3. Other copies are deposited with the Superintendent of Documents, Washington, D. C., from whom they can be had at prices slightly above cost.

4. Copies of all Government publications are furnished to the principal public libraries in the large cities throughout the United States, where they can be consulted by those interested.

The Professional Papers, Bulletins, and Water-Supply Papers treat of a variety of subjects, and the total number issued is large. They have therefore been classified into the following series: A, Economic geology; B, Descriptive geology; C, Systematic geology and paleontology; D, Petrography and mineralogy; E, Chemistry and physics; F, Geography; G, Miscellaneous; H, Forestry; I, Irrigation; J, Water storage; K, Pumping water; L, Quality of water; M, General hydrographic investigations; N, Water power; O, Underground waters; P, Hydrographic progress reports; Q, Fuels; R, Structural materials. This paper is the fifty-fourth in Series E, the complete list of which follows (PP=Professional Paper; B=Bulletin):

SERIES E, CHEMISTRY AND PHYSICS.

B 9. Report of work done in the Washington laboratory during the fiscal year 1883-84, by F. W. Clarke and T. M. Chatard. 1884. 40 pp. (Out of stock.)

B 14. Electrical and magnetic properties of the iron carburets, by Carl Barus and Vincent Strouhal. 1885. 238 pp. (Out of stock.)

B 27. Report of work done in the Division of Chemistry and Physics, mainly during the year 1884-85. 1886. 80 pp.

B 32. Lists and analyses of the mineral springs of the United States (a preliminary study), by Albert C. Peale. 1886. 235 pp. (Out of stock.)

B 35. Physical properties of the iron carburets, by Carl Barus and Vincent Strouhal. 1886. 62 pp.

B 36. Subsidence of fine solid particles in liquids, by Carl Barus. 1886. 58 pp. (Out of stock.)

B 42. Report of work done in the Division of Chemistry and Physics, mainly during the fiscal year 1885-86, by F. W. Clarke. 1887. 152 pp., 1 pl. (Out of stock.)

B 47. Analyses of waters of the Yellowstone National Park, with an account of the methods of analyses employed, by F. A. Gooch and J. E. Whitfield. 1888. 84 pp. (Out of stock.)

B 52. Subaerial decay of rocks and origin of the red color of certain formations, by I. C. Russell. 1889. 65 pp., 5 pls. (Out of stock.)

B 54. On the thermoelectric measurement of high temperatures, by Carl Barus. 1889. 313 pp., 11 pls. (Out of stock.)

B 55. Report of work done in the Division of Chemistry and Physics, mainly during the fiscal year 1886-87, by F. W. Clarke. 1889. 96 pp. (Out of stock.)

B 60. Report of work done in the Division of Chemistry and Physics, mainly during the fiscal year 1887-88. 1890. 174 pp. (Out of stock.)
B 64. Report of work done in the Division of Chemistry and Physics, mainly during the fiscal year 1888-89, by F. W. Clarke. 1890. 60 pp.
B 68. Earthquakes in California in 1889, by J. E. Keeler. 1890. 25 pp.
B 73. The viscosity of solids, by Carl Barus. 1891. xii, 139 pp., 6 pls.
B 78. Report of work done in the Division of Chemistry and Physics, mainly during the fiscal year 1889-90, by F. W. Clarke. 1891. 131 pp. (Out of stock.)
B 90. Report of work done in the Division of Chemistry and Physics, mainly during the fiscal year 1890-91, by F. W. Clarke. 1892. 77 pp.
B 92. The compressibility of liquids, by Carl Barus. 1892. 96 pp., 29 pls.
B 94. The mechanism of solid viscosity, by Carl Barus. 1892. 138 pp.
B 95. Earthquakes in California in 1890 and 1891, by E. S. Holden. 1892. 31 pp.
B 96. The volume thermodynamics of liquids, by Carl Barus. 1892. 100 pp.
B 103. High temperature work in igneous fusion and ebullition, chiefly in relation to pressure, by Carl Barus. 1893. 57 pp., 9 pls.
B 112. Earthquakes in California in 1892, by C. D. Perrine. 1893. 57 pp.
B 113. Report of work done in the Division of Chemistry and Physics during the fiscal years 1891-92 and 1892-93, by F. W. Clarke. 1893. 115 pp.
B 114. Earthquakes in California in 1893, by C. D. Perrine. 1894. 23 pp.
B 125. The constitution of the silicates, by F. W. Clarke. 1895. 100 pp. (Out of stock.)
B 129. Earthquakes in California in 1894, by C. D. Perrine. 1895. 25 pp.
B 147. Earthquakes in California in 1895, by C. D. Perrine. 1896. 23 pp.
B 148. Analyses of rocks, with a chapter on analytical methods, laboratory of the United States Geological Survey, 1880 to 1896, by F. W. Clarke and W. F. Hillebrand. 1897. 306 pp. (Out of stock.)
B 155. Earthquakes in California in 1896 and 1897, by C. D. Perrine. 1898. 47 pp.
B 161. Earthquakes in California in 1898, by C. D. Perrine. 1899. 31 pp., 1 pl.
B 167. Contributions to chemistry and mineralogy from the laboratory of the United States Geological Survey; F. W. Clarke, Chief Chemist. 1900. 166 pp.
B 168. Analyses of rocks, laboratory of the United States Geological Survey, 1880 to 1899, tabulated by F. W. Clarke. 1900. 308 pp. (Out of stock.)
B 176. Some principles and methods of rock analysis, by W. F. Hillebrand. 1900. 114 pp. (Out of stock.)
B 186. On pyrite and marcasite, by H. N. Stokes. 1900. 50 pp.
B 207. The action of ammonium chloride upon silicates, by F. W. Clarke and George Steiger. 1902. 57 pp. (Out of stock.)
PP 14. Chemical analyses of igneous rocks published from 1884 to 1900, with a critical discussion of the character and use of analyses, by H. S. Washington. 1903. 495 pp.
PP 18. Chemical composition of igneous rocks expressed by means of diagrams, with reference to rock classification on a quantitative chemico-mineralogical basis, by J. P. Iddings. 1903. 98 pp., 8 pls.
B 220. Mineral analyses from the laboratories of the United States Geological Survey, 1880 to 1903, tabulated by F. W. Clarke, Chief Chemist. 1903. 119 pp.
B 228. Analyses of rocks from the laboratory of the United States Geological Survey, 1880 to 1903, tabulated by F. W. Clarke, Chief Chemist. 1904. 375 pp.
PP 28. The superior analyses of igneous rocks from Roth's tabellen, 1869 to 1884, arranged according to the quantitative system of classification, by H. S. Washington. 1904. 68 pp.
B 239. Rock cleavage, by C. K. Leith. 1904. 216 pp., 27 pls.
B 241. Experiments on schistosity and slaty cleavage, by G. F. Becker. 1904. 34 pp., 7 pls.
B 253. Comparison of a wet and crucible-fire method for the assay of gold telluride ores, with notes on the errors occurring in the operations of fire assay and parting, by W. F. Hillebrand and E. T. Allen. 1905. 33 pp.
B 261. Preliminary report of the operations of the coal-testing plant of the United States Geological Survey at the Louisiana Purchase Exposition, St. Louis, Mo., 1904; E. W. Parker, J. A. Holmes, M. R. Campbell, committee in charge. 1905. 172 pp.
B 262. Contributions to mineralogy from the United States Geological Survey, by F. W. Clarke, W. F. Hillebrand, F. G. Ransome, S. L. Penfield, Waldemar Lindgren, George Steiger, and W. T. Schaller. 1905. 147 pp.
PP 48. Report on the operations of the coal-testing plant of the United States Geological Survey at the Louisiana Purchase Exposition, St. Louis, Mo., 1904; E. W. Parker, J. A. Holmes, M. R. Campbell, committee in charge. 1906. 3 parts. 1,492 pp., 13 pls.
B 290. Preliminary report on the operations of the fuel-testing plant of the United States Geological Survey at St. Louis, Mo., 1905, by J. A. Holmes. 1906. 240 pp.
B 305. The analysis of silicate and carbonate rocks, by W. F. Hillebrand. 1906. 200 pp.
B 312. The interaction between minerals and water solutions, with special reference to geologic phenomena, by E. C. Sullivan. 1907. 69 pp.

B 316. Contributions to economic geology, 1906, Part II: Coal, lignite, and peat; M. R. Campbell, geologist in charge. 1907. 543 pp., 23 pls.

B 323. Experimental work conducted in the chemical laboratory of the United States fuel-testing plant at St. Louis, Mo., January 1, 1905, to July 31, 1906, by N. W. Lord. 1907. 49 pp.

B 325. A study of four hundred steaming tests made at the fuel-testing plant, St. Louis, Mo., in 1904, 1905, and 1906, by L. P. Breckenridge. 1907. 196 pp.

B 330. The data of geochemistry, by F. W. Clarke. 1908. 716 pp.

Correspondence should be addressed to

THE DIRECTOR,
UNITED STATES GEOLOGICAL SURVEY,
WASHINGTON, D. C.

JANUARY, 1908.

O

UNIV. OF MICH.
JUN 18 1910

UNIVERSITY OF MICHIGAN
3 9015 06224 6870

UNIV. OF MICH.
JUN 18 1910

UNIVERSITY OF
3 9015 062